22357 Columbia Street
Dearborn, MI 48124
313-277-5095
pvsheridan@wowway.com

3 January 2012 BY FEDEX AIRBILL # 8696-6728-3849

Ms. Angel M. De Filippo, Esq.
Grieco, Oates & De Filippo, LLC
Suite 200
414 Eagle Rock Avenue
West Orange, NJ 07052
973-243-2099

Subject: Kline v. Loman Auto Group, Victoria Morgan-Alcala, et al.
Expert Report – 2 January 2012 Revision

Dear Ms. De Filippo:

Per your request, I am forwarding the 2 January 2012 Revision of the subject report (DVD). I am reporting on those items and/or topics that I *anticipate* will comprise testimony I may give if called upon to do so in the subject litigation.

This attached revision contains the following additions versus the previous 10 August 2011 level:

► Minor information added to tabs to enhance report navigation (page number and range data)

► Addition of Attachments W, X, Y, Z, AA, AB, AC, AD, AE, AF, AG, AH, AI, AJ, AK, AL, AM, AN, AO and AP.

For convenience I have attached an updated Table of Contents: the red box intralink will forward reader to report content, the blue will return to index page, the green will return to report content reference. Please do not hesitate to contact me regarding this subject at any time.

Respectfully,

Paul V. Sheridan

cc: Courtney E. Morgan, Esq.

Table of Contents

Page One of Three

Notes	5-6
EXPERT WITNESS REPORT - FIRST REVISION, 28 April 2011	7
ATTACHMENT A: Chrysler Chairman's Award	28
ATTACHMENT B: Chrysler Times article, Paul V. Sheridan interview	30
ATTACHMENT C: Chrysler Times 2-page article on Organization	32
ATTACHMENT D: Paul V. Sheridan Performance Appraisals 1993/1994	35
ATTACHMENT E: Courtney Morgan, Esq. Letter of July 14, 1995, Re: Sheridan office file confiscation by Chrysler lawyers/security	42
ATTACHMENT F: Paul V. Sheridan letter to Attorney General Janet Reno of October 27, 1999, Subject: Department of Justice Assistance to Special Interests : Chrysler Corporation, FOIA Lawsuits and the NHTSA Defect Investigation Conspiracy	47
ATTACHMENT G: Center for Auto Safety (CAS) Petition of October 2, 2009 to National Highway Traffic Safety Administration (NHTSA) to initiate a defect investigation into and recall of all 1993-2004 Jeep Grand Cherokee vehicles	248
ATTACHMENT H: Memo/Rebuttal to Defendant's Expert Reports	318
ATTACHMENT I: Paul V. Sheridan Letter to Center for Auto Safety (CAS) of June 1, 2010, Subject: Petition of October 2, 2009 Jeep Grand Cherokee Defect Petition 09-005 (DP-09-005) File Update	327
ATTACHMENT J: Paul V. Sheridan Letter to NHTSA Administrator Mr. David L. Strickland of February 9, 2010, Subject: NHTSA Action Number PE10031 – File Update Jeep Grand Cherokee Fuel System Crashworthiness Defect Investigation)	360
ATTACHMENT K: Paul V. Sheridan Letter to Plaintiff's Counsel Angel M. DeFilippo, Esq. of September 28, 2010, Subject: Document Reliance/Review Report: Expert Witness Report-Preliminary, November 30, 2009	606
ATTACHMENT L: Memo to Attachment L Video File	613
ATTACHMENT M: Francois J. Castaing Chrysler Memo of December 14, 1987, Subject: Jeep and Dodge Truck Engineering (JTE) Organization Charts	614

Table of Contents
Page Two of Three

ATTACHMENT N: Attachment N Video File and Link to YouTube Video: Chrysler Jeep XJ Cherokee Fire Report on ABC11 News Program of March 1, 2011	622
ATTACHMENT O: Photos of Suzuki Small SUV Standard Equipment "Skid Plate"	623
ATTACHMENT P: Attachment N Video File, and Link to 2011 WL-Body Jeep Grand Cherokee Skid Plates Television Ad	633
ATTACHMENT Q: Paul V. Sheridan Letter to Plaintiff's Counsel Angel M. DeFilippo, Esq. of September 28, 2010, Subject: Sample pages of the Chrysler 'Engineering Book of Knowledge' (EBOK).	634
ATTACHMENT R: Jeep Grand Cherokee (ZJ) Real-World / Underride Crash Test Report - 16 May 2011 at Karco Engineering, LLC.	636
ATTACHMENT S: The Well-Known Issue of the Underride Accident Mode	705
ATTACHMENT T: Defendant Lomans Knowledge of Fuel System Defect Safety Recalls	729
ATTACHMENT U: The Toyota Speedometer Issue and Ruse	736
ATTACHMENT V: Subject Vehicle Spoliation by Defendant's Experts	746
ATTACHMENT W : Paul V. Sheridan Affidavit of 13December2011	749
ATTACHMENT X : 16Nov2011 Orlando ZJ Fire Death Inspection	819
ATTACHMENT Y : 1997 Jeep ZJ BTSI Recall – ABC News Primetime	822
ATTACHMENT Z : General Motors Apology to NHTSA (Re: Dr. Rose Ray, et al.)	825
ATTACHMENT AA : SUV Wheelbase to Fuel Tank Location / Protections Comparison	839
ATTACHMENT AB : Safety Leadership Team Customer Focus Group Research Report	841
ATTACHMENT AC : Deposition of 11Nov1996 of Chrysler Lawyer Mr. Gregory J. Ridella (Re: Sheridan Office Files tampering by litigation lawyers, former supervisors, et al.)	859
ATTACHMENT AD : C. Ditlow letter of 1Sep 2011 to Fiat Chairman Mr. Sergio Marchionne	886
ATTACHMENT AE : Chrysler Response letter to C. Ditlow of 14Oct 2011	898

Table of Contents

Page Three of Three

ATTACHMENT AF : C. Ditlow letter of 1Sep 2011 to Fiat Chairman Mr. Sergio Marchionne (Re: 16Nov2011 Orlando ZJ Fire Death and Severe Injury Accident)	901
ATTACHMENT AG : National Automobile Dealers Association Code of Ethics Statement	904
ATTACHMENT AH : Chrysler Corporate Organization Directory of 3Nov1995 (Re: Dealer Relations, Customer Relations, Field Sales, Zone Office, etc.)	907
ATTACHMENT AI : 1986 Truck Dealers Visit Report	919
ATTACHMENT AJ : Attorney Mr. Mikal J. Watts letter of 15Jul 1996 to Paul V. Sheridan (Re: Chrysler document release to public domain/status)	1014
ATTACHMENT AK : Mikal J. Watts letter of 24March2000 to Chrysler lawyer Mr. Thomas Kienbaum (Re: *"email planning a concerted smear campaign against a material witness"*)	1022
ATTACHMENT AL : Front-Page Detroit News Newspaper Article entitled *"Safety Firebrand Refuses to Relent."* (Re: Quotation of above Attachment AK content to public domain)	1033
ATTACHMENT AM : C. Ditlow FOIA / NHTSA Release of Paul V. Sheridan Safety Files	1043
ATTACHMENT AN: Chrysler Personnel History Record (PHR) Standard Form	1046
ATTACHMENT AO : Depositions (partial) of Chrysler executives John M. Fonger and Michael J. Krotche (Re: Chrysler lawyer instruction **not** to have contact with "John Doe.")	1049
ATTACHMENT AP : Affidavit of 10Feb 1995 of Mr. Seymour Kliger, General Manager of Garrity Motor Sales Chrysler dealership, and deposition page of 14Feb 1995 of Mr. Kliger (Re: Identification of Mr. Seymour Kliger as "John Doe" per Chrysler *ex parte* complaint [paragraph 12 of Kliger affidavit], denial of crash test document receipt/transfer [last page].)	1065
End of Document	1072

Notes

Notes

EXPERT WITNESS REPORT - FIRST REVISION

Kline v. Loman Auto Group, Victoria Morgan-Alcala, et al.

PAUL VICTOR SHERIDAN, BS, MBA

28 April 2011

INTRODUCTION

1. My name is Paul V. Sheridan. I reside at Dearborn, Michigan. All facts and opinions recited in this report are either known to me personally as matters of fact, or represent opinions I have formed based upon my specialized education, specialized training, specialized experience, observations, knowledge, employment with Chrysler Corporation (hereafter "Chrysler"), involvement with DaimlerChrysler Corporation, involvement with Chrysler LLC, involvement with Chrysler Group LLC, work with Chrysler automotive and truck dealerships, review of substantial literature, review of parts, including Chrysler parts and vehicles, as well as parts, vehicles and literature of competitive automotive manufacturing companies such as General Motors, Ford, Toyota, et al.

2. I am currently engaged in the automotive safety consultation profession as a 'General Automotive Safety Management Expert.' I was certified as such by Judge Robert Childers in the matter of Mohr v. DaimlerChrysler, Circuit Court of Shelby County, Tennessee, in February 2005. My status was affirmed by the Court of Appeals at Jackson, Tennessee in July 2007. For fifteen years I have offered my safety consultations on Chrysler Corporation products. I have testified in this expert capacity in jury trial, sworn deposition and report:

a. In July 2005 I won the National Champion Award from the Civil Justice Foundation for my work as a General Automotive Safety Management Expert. I am the only person in history to win this award for contributions to automotive safety.

3. I am aware from my involvement in existing and previous litigation that Chrysler has settled and sealed many lawsuits, and paid substantial damages to plaintiffs who have been severely injured and/or killed as a direct result of Chrysler's failure to adequately inform and failing to adequately protect the general public regarding the known safety defects that are inherent in the fuel system of their 1993 through 2004 model year versions of the Jeep Grand Cherokee and Jeep Grand Wagoneer sport utility vehicles.

4. I am aware that a lawsuit had originally been filed against Chrysler LLC, in the Superior Court of New Jersey, Morris County, alleging that this auto maker placed SUSAN MORRIS KLINE at grave risk by failing to adequately inform and failing to adequately protect her, her family and the general public, specifically regarding the known safety defects that are inherent in the fuel system of the 1996 Jeep Grand Cherokee sport utility vehicle:

a. I am aware that subsequent to this original lawsuit filing against Chrysler LLC, the auto maker filed for bankruptcy protection on April 30, 2009 in the U.S. Bankruptcy Court for the Southern District of New York seeking relief under Chapter 11 of the U.S. Bankruptcy Code.

b. Protection was granted on June 1, 2009 forming two entities Old Carco LLC and Chrysler Group LLC. Old Carco LLC has a value of zero. Both continue function at the original address: 1000 Chrysler Drive, Auburn Hills, MI 48326.

c. I am aware that Chrysler Group LLC denies any product liability responsibility for the 1996 Jeep Grand Cherokee sport utility vehicle, such as that previously owned and previously operated on February 24, 2007 by SUSAN MORRIS KLINE,

d. I am aware that subsequent inquires from the United States Senate relating to paragraph 4c influenced a public relations announcement by Chrysler Group LLC which claim that it would assume product liability responsibility for "*all Chrysler LLC vehicles purchased before June 10, 2009 and involved in accidents after that date.*" This August 30, 2009 announcement did not offer revisions to honor the product liability responsibilities associated with the 1996 Jeep Grand Cherokee sport utility vehicle previously owned and previously operated by SUSAN MORRIS KLINE and was involved in an accident on February 24, 2007,

e. I am aware that defendant Loman Auto Group historically routinely sold and serviced the following vehicle brands: Ford, Subaru, Chrysler and Jeep. Under bankruptcy restructuring, Chrysler Group LLC "rejected" transfer of existing dealership franchises for ~800 Chrysler, Dodge, Dodge Truck and Jeep dealerships. Loman Auto Group was rejected by Chrysler Group LLC, and is therefore no longer franchised to sell Chrysler or Jeep vehicles. However I am aware that Loman Auto Group sold and serviced/prepped the 1996 Jeep Grand Cherokee sport utility vehicle, which was previously owned and previously operated by SUSAN MORRIS KLINE and which was involved in an accident on February 24, 2007,

i. Having earned substantial revenue from the sale and service of Jeep vehicles, defendant Loman Auto Group is thoroughly familiar with the three engineering iterations of the Jeep Grand Cherokee sport utility vehicle: 1993 through 1999, 2000 through 2004, and 2005 through 2009 (See ¶ 5).

JEEP GRAND CHEROKEE – GENERAL PRODUCT HISTORY

5. Chrysler vehicle engineering programs are designated by two-letter codes. These codes change when modifications to the original engineering design occur, including relatively minor revisions. The term 'Jeep Grand Cherokee' is the brand name for the consumer market, which was based on internal engineering programs which were/are historically coded as follows:

a. ZJ-Body: Produced for the 1993 through 1998 model years,

b. WJ-Body: Produced for the 1999 through 2004 model years,

c. WK-Body: Produced for the 2004 through 2010 model years,

d. WL-Body: Produced for the 2011 through ongoing model years.

6. The first iteration of the Jeep Grand Cherokee (ZJ-Body) was approved for production by management in 1987 for production in January 1992 as a 1993 model year vehicle:

a. The ZJ-Body was designed with the fundamental safety defect of locating the fuel tank behind the rear axle in what is called the "crush zone," and without adequate shielding/protection from foreseeable real-world collisions,

b. Upon the 1993 introduction of the ZJ-Body version of the Jeep Grand Cherokee, no other competitive sport utility vehicle was sold with a fuel tank behind the rear axle, below the rear bumper, and without adequate shielding/protection from foreseeable real-world rear under-ride collisions.

c. Since introduction in 1993, the ZJ-Body version of the Jeep Grand Cherokee has been the focus of many fire-related deaths and/or severe injury accidents, and lawsuits that have been settled & sealed by Chrysler lawyers.

7. The second engineering iteration of the Jeep Grand Cherokee, the WJ-Body, was approved for production by Chrysler management in approximately 1995, for initial production in September 1998 as a 1999 model year introduction:

a. Although a substantial number of parts/components were revised, the 1999 WJ-Body did not involve major revisions to case-relevant structural or overall vehicle layout/configuration,

b. The WJ-Body continued with the fundamental safety defect of locating the fuel tank behind the rear axle in the rear "crush zone," and without adequate shielding/protection from foreseeable real-world under-ride collisions,

c. Upon the 1998 introduction of the WJ-Body version of the Jeep Grand Cherokee, no other competitive sport utility vehicle was sold with a fuel tank behind the rear axle, below the rear bumper, and without adequate shielding/protection from foreseeable real-world rear under-ride collisions.

d. At the time of the 1998 introduction of the WJ-Body version of the Jeep Grand Cherokee, Chrysler Corporation had just been "merged" with DaimlerBenz to form DaimlerChrysler Corporation. To the best of my knowledge, no DaimlerBenz engineering inputs were incorporated into the WJ-Body version of the Jeep Grand Cherokee due to time constraints, etc.

e. Since introduction in 1998, the WJ-Body version of the Jeep Grand Cherokee has been the focus of many fire-related deaths and/or severe injury accidents, and lawsuits that have been settled & sealed by Chrysler lawyers.

8. The third engineering iteration of the Jeep Grand Cherokee, the WK-Body, was approved for production by Chrysler management in approximately 1999, for initial production in September 2004 as a 2005 model year introduction:

a. The WK-Body represents a very substantial re-design of the Jeep Grand Cherokee. The fundamental safety defect of locating the fuel tank behind the rear axle in the rear "crush zone," and without adequate shielding/protection, was eliminated by relocating the fuel tank to the middle portion of the vehicle, in front of the rear axle, and providing substantial shielding/protection from foreseeable real-world collisions,

b. At the time of program approval in 1999, the WK-Body benefited from the just-prior formation DaimlerChrysler Corporation, which allowed substantial incorporation of DaimlerBenz design and engineering inputs. It is well-known that incorporation of substantial DaimlerBenz design and engineering inputs continues and is extended with the all-new 2011 version of Jeep Grand Cherokee, despite the fact that Chrysler Group LLC is no longer part of a DaimlerBenz "merger,"

c. Locating the fuel tank to the middle of the vehicle, in front of the rear axle, and providing substantial shielding/protection from foreseeable real-world collisions, is standard industry practice of twenty-five-plus years. To the best of my knowledge all DaimlerBenz sport utility vehicles have adhered to this location practice.

d. Since introduction for the 2005 model year, the re-design of the WK-Body version of the Jeep Grand Cherokee has not been the focus of any fire-related deaths and/or fire-related severe injury accidents, and has not been the focus of any fire-related death and/or severe injury litigation leading to lawsuits that have been settled & sealed by Chrysler or dealership defense lawyers,

i. Recent news media reports have claimed that "only one" WK-Body version of the Jeep Grand Cherokee has been involved in a "fire related death" since the 2005 model year introduction. This is completely false. The accident referenced by the news media occurred on October 11, 2007 in Florida, which involved a 2008 Jeep Grand Cherokee, did not have any fire related deaths. The accident report, that I only recently acquired shows that there was no fuel tank related fire, there was no other colliding or under-riding accident vehicle; this was a one-car rollover accident, involving ejection of the driver and passenger; death of the latter is attributed to "blunt force trauma." From the police report it appears that the fuel tank in this WK-Body version remained intact.

CHRYSLER CORPORATE / ACQUISITION HISTORY

9. In 1998, Chrysler was acquired by DaimlerBenz AG of Germany to form DaimlerChrysler AG. DaimlerBenz was the original manufacturer of Mercedes-Benz automobiles. This acquisition was referred to by both Chrysler and DaimlerBenz executive management as a "marriage made in heaven" and a "merger of equals":

a. During 1994/1995 Chrysler executive management discussed the merging of Chrysler with DaimlerBenz. The accounting firm of Goldman-Sachs International (GSI) was hired to do the financial study code-named "Project Blitz." Project Blitz was presented to Chrysler management on October 4, 1995,

b. The August 6, 1997 proxy statement includes *"Interests of Certain Persons in the Chrysler Merger,"* which details that top Chrysler executives be compensated with cash and stock totaling "$395 million." It was later reported that ex-Chrysler CEO, Robert Eaton, received in excess of $200 million after the "merger" of early 1998,

c. During the period when DaimlerChrysler Corporation was a subsidiary of DaimlerChrysler AG, open communications between the engineers, product planners, external suppliers, et al. of DaimlerChrysler of Auburn Hills, Michigan and Mercedes-Benz of Stuttgart, Germany were routine, and mandated by an internal program called "Post Merger Integration" (PMI):

i. During PMI, Chrysler vehicles were shipped to Mercedes-Benz of Stuttgart, Germany for detailed review of engineering of components, systems and subsystems,

ii. During PMI, Mercedes-Benz vehicles were shipped to DaimlerChrysler of Auburn Hills, Michigan for detailed review of engineering of components, systems and subsystems (See ¶ 22 and ¶ 23 below).

d. Owing to my expert consultations in the Jeep crashworthiness litigation of Gillespie v. DaimlerChrysler, during the time that DaimlerChrysler Corporation was a subsidiary of DaimlerChrysler AG and considered part of a "merger of equals", DaimlerChrysler was ordered to provide a witness described by the court as:

". . . the person at DaimlerChrysler most knowledgeable about rollover testing conducted by DaimlerChrysler and rollover testing done by MercedesBenz."

Shortly after this order was issued the Gillespie litigation was settled out-of-court.

10. In May 2007 DaimlerChrysler was sold into an affiliate of a private equity firm, Cerberus Capital Management, L.P., and renamed Chrysler Corporation LLC ("Chrysler LLC") which then continued to produce and sell Chrysler, Dodge and Jeep vehicles:

a. DaimlerChrysler AG retained 20 percent ownership in Chrysler LLC.

11. In April 2009, prior to a deadline demanded by the Obama Administration, the remaining 20 percent ownership of Chrysler LLC by DaimlerChrysler AG was sold to Cerberus Capital Management, L.P. Chrysler LLC then filed for bankruptcy protection on April 30, 2009 in the U.S. Bankruptcy Court for the Southern District of New York seeking relief under Chapter 11 of the U.S. Bankruptcy Code:

a. DaimlerChrysler AG is now Daimler AG.

12. On June 10, 2009 Chrysler LLC was reorganized into Chrysler Group LLC as part of an "alliance" with foreign auto maker Fiat Group Automobiles S.p.A. based in Turin, Italy. Chrysler Group LLC continues to produce/sell Chrysler, Dodge and Jeep vehicles worldwide.

PAUL VICTOR SHERIDAN EDUCATION AND EARLY WORK EXPERIENCE

13. I hold a Bachelor's of Science Degree (BS) in Mathematics and Physics conferred in 1978, by the State University of New York. I hold a Master's in Business Administration (MBA) in General Management and Logistics conferred by Cornell University in 1980:

a. During the first year of my studies at SUNY I simultaneously worked as 'Assistant to the Director' at the University Computer Center,

b. During the last two years at SUNY I was promoted to 'Chief Technical Assistant to the Engineer' at the SUNY Nuclear Accelerator Laboratory,

c. During my studies at Cornell University I was employed as University Liaison by the Graduate School of Management, Department of Economics. I investigated and co-authored the aerospace portion of a national energy paper, commissioned by the Department of Energy (DOE). My report was based on extensive visitations and interviews with the aerospace engineers of NASA. My paper was presented to the U.S. Senate in 1979 by energy economist Professor Robert Lind.

SHERIDAN PROFESSIONAL AUTOMOTIVE EXPERIENCE – GENERAL

14. After graduation from Cornell University, I was hired by Ford Motor Company at their headquarters location in Dearborn, Michigan. I worked at Ford from 1980 to 1984. My responsibilities included program management, vehicle production planning, automotive product planning, and power train planning. I was promoted regularly, and earned several substantial salary increases during this 1981-1984 period.

a. Assignments also included Emissions Components Planning and Corporate Average Fuel Economy (CAFÉ) duties. These duties required existing and ongoing acquisition of expertise in automotive fuel systems design and testing.

15. In July 1984, I accepted an unsolicited promotional offer from Chrysler Corporation. The new position represented a significant increase in responsibility:

a. Work at Chrysler focused in two areas: (1) engineering programs management and (2) product programs management. Chrysler Personnel Policy did not require an engineering degree *per se* for assignment to these areas, but did require and utilized my extensive understanding and education in science and technology (see ¶ 13),

b. I am one of only three people in-history to receive the "Chairman's Award" from Mr. Lee Iacocca during his tenure as Chairman and Chief Executive Officer. I received this award as a result of nomination by the Chassis Engineering department for my work on Dodge Truck exhaust systems engineering (Attachment A).

16. My Chrysler career spanned July 1984 to December 1994. I served Chrysler customers with work in product planning, program planning, and engineering programs management:

a. As Program Planning Manager I was central to the reformation of Engineering into "Business Groups." I was co-author of the Business Group Charter, and organized presentation of this proposed organization to the highest levels of executive management. Upon approval eleven Business Groups were formed that divided the vehicle engineering duties:

Body Structures
Exterior Trim
Paint & Anti-Corrosion
Interior Trim
Climate Control
Body Electrical
Engine
Transmission & Driveline
Powertrain Components
Chassis Systems
Fuel Systems

I was assigned to the Paint & Anti-Corrosion, Body Systems, Chassis, and Fuel Systems Business Groups. The latter affirmed and extended my expertise in fuel systems design,

b. As Product Planning Manager I budgeted, organized and authored the 'Truck Dealer Visit Program.' I was responsible for solicitation/documentation of both Chrysler and competitive dealer-principal interviews and report summaries. This experience provided general and specialized expertise in auto dealer operations including showroom design, customer relations, and vehicle service procedures.

17. Owing to my experience, expertise and reputation, in 1987 I was promoted into Jeep and Truck Engineering (JTE) as an Engineering Programs Manager. I remained at JTE from September 1987 until February 1991. This assignment involved engineering programs management of all vehicle systems including but not limited to powertrain, chassis, electrical/electronic, body systems, and regulatory compliance. My responsibilities initially included the Jeep Grand Wagoneer (SJ-Body), but were later dedicated to the Dodge trucks:

a. As Engineering Programs Manager, I was responsible for the work of hundreds of both Chrysler internal engineers, and external engineers at Chrysler suppliers,

b. In 1988 I was moved to the Engine Engineering Group with responsibility for both gasoline and diesel engine systems,

c. My work as Engine Programs Manager received recognition in *The Chrysler Times*, the only manager so-recognized (Attachment B).

18. I was regularly promoted in my responsibilities and compensation, and I received very positive job ratings on properly executed performance reviews during my career at Chrysler.

CHRYSLER INTERNAL AND EXTERNAL ORGANIZATION AND OPERATIONS

19. In 1990 the Chrysler vehicle product development process was reorganized into an internal organization called "Platforms." These vehicle Platforms include:

a. Minivan Platform

b. Small Car Platform

c. Large Car Platform

d. Truck Platform

e. Jeep Platform

Individually these five Platforms were dedicated to each vehicle type and employ staff from product operations, engineering, procurement, design, manufacturing, etc. (Attachment C).

20. The Jeep Platform developed the 1996 Jeep Grand Cherokee which was previously owned and operated by SUSAN MORRIS KLINE:

a. These Platforms created the engineering and product content of the Chrysler branded vehicle product lines (Plymouth, Dodge, Chrysler, Jeep, etc) that are *now* sold & serviced by 4,000 independent dealerships. These are also sold in foreign markets by several hundred foreign independent dealerships.

b. Each Platform was led by an executive that functioned both in staff and line roles. The Jeep Platform, which developed the 1996 Jeep Grand Cherokee which was previously owned and operated by SUSAN MORRIS KLINE, was headed by Mr. Francois J. Castaing. Simultaneously, Castaing's line role was 'Executive Vice President for Engineering.' Mr. Castaing was simultaneously responsible for the product management decisions and resulting engineering executions respectively relating to the 1996 Jeep Grand Cherokee. Mr. Castaing is aware of the customary practices of the Detroit-based automotive industry, including the fact that management decisions and philosophies *precede* and delimit engineering design & development; the latter includes components and systems that support a range of vehicle functions from convenience features to safety requirements.

21. Replacement parts, warranty parts, and repair & retrofit procedures for the Chrysler brands are provided by the Service & Parts Division, trade-named MOPAR. Chrysler dealerships rely on MOPAR for components and procedures relating to safety defect recalls and safety-related retrofits. A majority of these parts are purchased from outside suppliers by MOPAR for resale to the Chrysler dealerships or directly to the customer:

a. Throughout my career at Chrysler I routinely received the MOPAR Service & Parts Bulletins which announce, update and describe the details of all approved vehicle maintenance, service, and safety procedures. The bulletins were regularly distributed both electronically and in hard-copy format to the-then 5,000 independent dealerships.

b. Defendant Loman Auto Group is thoroughly familiar-with and was a regular recipient-of the MOPAR Service & Parts Bulletins. This included distribution of the February 2002 safety recall bulletin entitled:

"Safety Recall No. A10 – Fuel Tank Blocker Bracket"

which involved the Jeep Grand Cherokee vehicle, and the inability of 71,000 production units of that vehicle to comply with the minimal regulatory requirements as set forth by, and defined as such by, the National Highway Traffic and Safety Administration (NHTSA) under "Federal Motor Vehicle Safety Standard (FMVSS) No. 301 – Fuel System Integrity":

i. In this context, among others, Defendant Loman Auto Group is familiar with the optional sales code "XEE" offered by Chrysler for the Jeep Grand Cherokee to new car buyers entitled "Fuel Tank Skid Plate Shield."

ii. In this context, Defendant Loman Auto Group is familiar with the fact that regarding Jeep Grand Cherokees, Safety Recall No.A10 states:

"Those vehicles that have already been repaired by having a skid plate installed do NOT require any additional service."

c. Defendant Loman Auto Group is familiar-with and was a regular recipient-of the MOPAR Accessories Catalogs which included many Jeep Grand Cherokee safety retrofits, including but not limited to the fuel tank skid plate:

i. In this context, Defendant Loman Auto Group is familiar with the fact that the original new purchase sales code "XEE" offered by Chrysler to buyers entitled "Fuel Tank Skid Plate Shield" involves components that can be retrofitted to the 1996 Jeep Grand Cherokee which was previously owned and operated by SUSAN MORRIS KLINE. This retrofit would have offered shielding/protection for the exposed rear-mounted fuel tank from foreseeable real-world rear end underride collisions,

d. Defendant Loman Auto Group is also thoroughly familiar-with and was a regular recipient-of the MOPAR PARTS EXPRESSIONS trade magazine which frequently featured aftermarket activities such as recreational off-roading:

i. In this context, Defendant Loman Auto Group is familiar with the instructional videos offered through MOPAR entitled, "The World of Four-Wheeling: Off-Road and Winter Driving Techniques."

22. Throughout my career at Chrysler, I performed duties pertaining to acquiring detailed knowledge-of and experience-with competitive automotive product (Ford, Toyota, etc.) These duties included drive-evaluations of competitive brands. These vehicles were managed by the Chrysler Competitive Cars Coordinator, and were also routinely evaluated by Chrysler

executive management. The primary purpose of these drive-evaluations was identification and documentation of superior aesthetic and engineering design, and feature content. To the best of my knowledge, the practice of competitive drive-evaluations continues at Chrysler Group LLC to this day.

a. Competitive sport utility vehicles were routinely provided by the Competitive Cars Coordinator for evaluation by Chrysler management and engineering staffs.

23. Throughout my career at Chrysler, my duties included detailed review of competitive engineering of components, systems and subsystems. Competitive vehicles were fully dismantled by technicians from the Competitive Teardown Office. This "teardown" function is an integral part of the engineering and product development process. Its purpose is to accumulate detailed engineering information of competitive component and system design. The teardown process resulted in the following reports and review duties:

a. The Competitive Teardown Review: These formal reviews were presented by the engineering staffs, and frequently attended by Chrysler executive management.

b. Competitive Teardown Report: Distributed throughout the Chrysler organization, including Chrysler executive management. These reports included detailed information about competitive components content, design, cost, weight, supplier sources, etc.

c. Reviews by individual engineering or product planning personnel as part of their day-to-day responsibilities. The teardown components were displayed on vertically hung 4 x 8 sheets, for analysis and inspection by the individual engineering or product planning groups. This display area was referred to as "The Boards,"

d. Competitive Teardown Office visits: Involve open, non-formal inspection, by both Chrysler employees and suppliers, on an as-needed basis,

e. Competitive sport utility vehicles were routinely fully dismantled by technicians from the Competitive Teardown Office for evaluation by Chrysler management and engineering staffs.

As part of my duties at Chrysler I routinely provided managerial input on the selection of which competitive vehicles would be budgeted for teardown. To the best of my knowledge, the practice of Competitive Teardown Review continues at Chrysler Group LLC to this day.

SHERIDAN TRANSFER TO MINIVAN OPERATIONS

24. In February 1991, I accepted a Chrysler position as a Product Manager in the Minivan Operations group. My *general* duties included but were not limited to:

a. General business and product management of existing and future minivan models: Updates to the Program Objectives Summary (12-panel chart), co-authorship of the minivan Product Plan, presentation of the Plan to Chrysler management,

b. Interaction with the other platforms to solicit and share inputs of design, development, and manufacture of Chrysler products,

c. Interaction with the internal organizations of engineering, legal, manufacturing, design, marketing, sales, customer relations, procurement, international planning, finance, consumer research, regulatory affairs, etc.,

d. Interaction with external organizations such as suppliers, market and consumer research companies, consulting companies, advertising agencies, etc.

25. My *specific* Minivan Operations responsibilities included body components, chassis systems, exterior ornamentation, product complexity and logistics, competitive products analysis, regulatory compliance planning, engine and transmission systems planning.

26. I remained in Minivan Operations until December 26, 1994.

SHERIDAN APPOINTMENT TO CHAIR SAFETY LEADERSHIP TEAM (SLT)

27. In Minivan Operations I developed extensive files relating to competitive products, including safety records/history. This fact was well-known to Chrysler management.

28. While in Minivan Operations I developed extensive files relating to the minivan product, market segment, safety, and regulatory compliance. In my 1991 employee job performance appraisal, supervisor Mr. Richard Winter made the following remark :

"(Mr. Sheridan) is very good at monitoring safety and regulatory needs."

29. In 1992, Chrysler executive management appointed me to chair a first-of-its-kind management group called the Minivan Safety Leadership Team (SLT). The SLT was comprised of 15-plus representatives from engineering, manufacturing, marketing, finance, legal, international products office, regulatory affairs, procurement, design, competitive information, et al.:

a. The January 27, 1993 letter which announced the formation and mandate of the SLT states the *"SLT activity will be formatted to be transferable/accessible to other platforms,"* such as the Jeep Platform (see ¶ 19).

b. In my capacity as SLT Chairman, I routinely made presentations to middle and executive management groups.

c. The three main areas of SLT analysis included but were not limited to:

i. Crash Avoidance
ii. Crash Survivability ("crash worthiness")
iii. Other

The primary concern in the instant matter is the crash survivability/crashworthiness of the 1996 Jeep Grand Cherokee which was previously owned and operated by SUSAN MORRIS KLINE,

d. The SLT analyzed safety systems that increased overall safety whenever a vehicle was being approached from behind, and therefore in potential danger of a rear-end collision (crash avoidance). The SLT unanimously recommended that a system called SROD, (side and rear object detection) be installed in Chrysler vehicles. SROD and associated safety systems were researched in 1994, and were graded as "*the best liked featured"* by the Chrysler Consumer Research department. SROD system was also qualified by a consumer quote:

"This should be mandatory!"

e. After executing all necessary internal documents, external supplier documents, and item entry into the product and engineering plans, the SROD system was unilaterally removed, without appropriate internal consultations, by Executive Vice President of Engineering Mr. Francois J. Castaing.

f. The SLT was abruptly disbanded by Chrysler executive management and legal staffs without explanation in October 1994 (Attachment D).

JEEP/TRUCK ENGINEERING (JTE) : BACKGROUND AND KEY EVENTS OVERVIEW

30. Chrysler Corporation purchased American Motors Corporation (AMC) in July 1987. This purchased occurred at the request of Chairman Lee Iacocca for the specific and narrow purpose of acquiring the Jeep product line. All former AMC (and Renault) vehicle products were eventually dropped by Chrysler management; whereas the Jeeps remain on sale through Chrysler Group LLC to this day:

a. After acquisition of the Jeep products, Chrysler management approved the all-new ZJ-Body for production as a 1993 model year, which included the Jeep Grand Cherokee which was previously owned and operated by SUSAN MORRIS KLINE.

31. During the 1987 purchase of AMC I was employed in the Dodge Truck Operations Group, reporting directly to Mr. Herb VonRusten, who reported to Mr. Dale Dawkins, who reported to Mr. Jerome York, who reported to Chrysler Chairman Mr. Lee Iacocca:

a. Prior to acquisition I was the liaison between Chrysler and AMC responsible for the transfer/review of confidential documents and trade secret information which were used to "smooth" the organizational transitions inherent in a business acquisition of this size and scope. During these liaison duties I reported directly to, and only to, Mr. Jerome York, Executive Vice President of Chrysler Finance. This assignment involved visitations to AMC facilities prior to the July 1987 purchase. I was chosen for these duties on the basis of an established record of competence, loyalty and integrity. I was the first "Chrysler guy" to establish an office in a former AMC facility, at the American Motors Engineering Center, Plymouth Road, Detroit, Michigan. This facility was later renamed Jeep/Truck Engineering (JTE), where both Dodge truck and Jeep engineering were consolidated 'under one roof.'

b. The knowledge and experience gained from these duties form part of the basis of my management expertise.

32. In September 1987 I was promoted into the newly formed JTE as an Engineering Programs Manager, with original responsibility for the Jeep Grand Wagoneer (SJ-Body), the Dodge Dakota pick-up truck (AN-Body) and the full-size Dodge Ram Van (AB-Body):

a. In this new position I reported to Mr. John C. Miller, who reported to Mr. Francois J. Castaing, then Vice President of JTE,

b. During 1987 and 1988 I was temporarily assisted by Mr. Gregory A. Netter, a former AMC engineer with extensive experience in the aftermarket and recreational uses of the Jeep product line, including but not limited to the nationally renowned off-road event called the "Jeep Jamboree,"

c. During 32-b Mr. Netter recounted to me, in writing and vocally, the details of the Jeep Jamboree event including but not limited to:

i. Drive routes, both on-road and off-road,

ii. Jeep vehicle types traditionally used for the Jeep Jamboree and other off-road events, such as the Jeep Wrangler (YJ-Body), Jeep Cherokee (XJ-Body), Jeep Grand Wagoneer (SJ-Body), etc.,

iii. Jeep vehicle preparation and modifications necessary for safe event participation, including but were not limited to installation of fuel tank skid plates on the Jeep fuel tanks,

iv. Details on Jeep Jamboree and other off-road event participants, including but not limited to the participation of Mr. Francois Castaing, then VP of JTE,

v. Because Mr. Netter was a member of my staff I arranged a work schedule that allowed his participation in the Jeep Jamboree and other off-road events, which were in-place prior to the Chrysler acquisition of AMC.

33. As an Engineering Programs Manager I was responsible for authoring and presentation of the 'Engineering Program Review Summary' for the Jeep Grand Wagoneer (SJ-Body), the Dodge Dakota pick-up truck (AN-Body) and the full-size Dodge Ram Van (AB-Body). These bi-monthly reviews included cost, investment weight, engineering design, engineering development, supply, manufacturing, and regulatory compliance status details. The audience for my 'Engineering Program Review Summary' was Mr. Francois Castaing, VP of JTE:

a. My JTE counterpart that was responsible for the 1996 model year Jeep Grand Cherokee (ZJ-Body) which was previously owned and operated by SUSAN MORRIS KLINE was Mr. Richard T. Scott, who reported to Mr. John C. Miller, who reported to Mr. Francois J. Castaing, then Vice President of JTE.

34. I reported directly/indirectly to Mr. Castaing for four years, from September 1987 to January 1991. From JTE and subsequent Chrysler assignments, and legal experiences including attendance at depositions of Mr. Castaing, I can report the following facts:

a. Mr. Castaing does not possess a Bachelor's degree in any area of engineering,

b. Mr. Castaing does not possess a Master's degree in any area of engineering,

c. Mr. Castaing does not possess a Doctorate's degree in any area of engineering,

d. Mr. Castaing does not possess a Professional Engineering Certification,

e. In his May 19, 1999 deposition Mr. Castaing was forced to admit to 34-a through 34-e, claiming to possess a "diploma of engineer" degree from 1968,

f. Official Chrysler Personnel Office guidelines strictly require that all engineering positions have a Bachelor's level degree in engineering or a related subject (e.g. physics, mathematics, etc.) as a minimum education before an employment candidate is merely offered an employment interview. Despite this blatant violation of well-known Personnel Office guidelines, Mr. Castaing was retained in the position of Vice President of JTE, and therefore ultimately responsible for the 1993 model year Jeep Grand Cherokee (ZJ-Body) which was previously owned and operated by SUSAN MORRIS KLINE.

i. Implicit to this educational training/qualifications is knowledge and execution of 'Failure Mode Effects Analysis'(FMEA). To the best of my knowledge, at no time during ZJ-Body development did Mr. Castaing design or deploy an FMEA for any portion of its fuel system,

g. In light of 34-f, Executive Vice President of Chrysler Engineering Mr. Robert M. Sinclair, who possessed a Bachelor's and Master's degree and a Professional Engineering Certification, resigned from twenty-plus years of employment with Chrysler. In 1988 Mr. Castaing was promoted, to replace Mr. Sinclair, assuming the position of Executive Vice President of Engineering. Mr. Castaing was replaced at JTE by Mr. Bernard I. Robertson.

35. In 1987, during the Chrysler acquisition of AMC, I was aware of events occurring under Mr. Castaing that were known to members of his staff as **"shredding parties"**:

a. Prior to acquisition by Chrysler it was well-known that AMC was defending numerous lawsuits regarding alleged crashworthiness-related defects in its Jeep products. It was well known, and I have testified that the "shredding parties" involved the destruction of internal crash test documents that related to or potentially related to the numerous Jeep lawsuits,

b. It was well-known that certain AMC employees participated in this 'destruction of evidence' just prior to the acquisition by Chrysler in July 1987,

c. It was well-known that AMC employee Mr. Richard C. Swando who was a

prior Chrysler employee, was threatened by Mr. Castaing with demotion or dismissal, over the his refusal to participate in the Jeep crash test document "shredding parties,"

d. It was also well-known that after acquisition of AMC Mr. Swando was transferred from JTE to the International Planning Group headed by Mr. Peter C. Badore. This transfer was characterized by ethics concerns voiced by Mr. Swando regarding the 'destruction of evidence' that occurred under Mr. Castaing during the AMC "shredding parties."

36. In the severe injury litigation of Tenaglia v. Chrysler, Mr. Castaing was examined by plaintiff attorney Mr. Larry Coben regarding his professional managerial and engineering knowledge of Jeep vehicle crashworthiness. In this March 14, 1996 deposition Mr. Castaing testified as follows:

Coben: *What does the term crashworthiness mean in terms of design of a product?*

Castaing: ***I don't know. Tell me.***

Coben: *You don't know the phrase?!*

Castaing: ***No.***

Coben: *Well, let me make sure I'm clear on this. As the chief engineer of the (Chrysler) company, are you at all familiar with the use of the phrase crashworthiness by the engineers of the company?*

Castaing: ***Crashworthiness is so vague that you have to tell me what you intend by that.***

An excerpt of the Castaing deposition discussed above is available for viewing here:

http://www.youtube.com/watch?v=25roI1nhOwI

I will re-emphasize that Mr. Castaing was the Jeep Platform Executive responsible for managerial and engineering decisions relating to development of the 1996 Jeep Grand Cherokee which was previously owned and operated by SUSAN MORRIS KLINE.

REAR END ACCIDENTS: THE WELL KNOWN "UNDER-RIDE" SCENARIO

37. When a rear colliding vehicle has a front bumper/structure height that is lower than the impacted vehicle, the static submersion that occurs is called under-ride:

a. The issue of static bumper height mismatch has a history spanning approximately forty years and is well-known to all participants of the automotive industry, including but not limited to:

i. The original equipment manufacturers such as Chrysler, Ford, Toyota, etc. ,

ii. The United States Government safety agencies such as the National Highway Traffic Safety Administration (NHTSA), the National Transportation Safety Board (NTSB), etc.,

iii. The automotive insurance industry, including the Insurance Institute for Highway Safety (IIHS), etc.

By no later than 1991 I was added to the mailing lists of NHTSA and IIHS. This included frequent communications in my capacity as a Chrysler executive with IIHS director Mr. Brian O'Neill. I have maintained continuous contact with these organizations in my capacity as a General Automotive Safety Management Expert.

38. In a dynamic real-world accident scenario, the bumper height mismatch malady is exaggerated due to the further lowering of the front bumper/structure during the hard accident-avoidance braking of the colliding vehicle:

a. The dynamic aspects of the real-world under-ride scenario are so well-known to the IIHS and their insurance company clients, that the latter has used simulation of this accident event type in their advertising:

i. In a television advertisement shown nationally by Allstate, a Toyota Camry vehicle is depicted under-riding a Dodge Durango sport utility vehicle during hard accident-avoidance braking,

ii. In a television advertisement shown nationally by Allstate, a Ford Taurus vehicle is depicted under-riding a Jeep Grand Cherokee (ZJ-Body), which was previously owned and operated by SUSAN MORRIS KLINE, during hard accident-avoidance braking,

39. To the best of my knowledge NHTSA has failed to address this well-known issue of under-ride in any of its safety regulations,

a. In this historical context, in my opinion, the NHTSA Federal Motor Vehicle Safety Standard 301 (FMVSS-301) entitled "Fuel System Integrity," has no practical or legal relevance to the instant matter,

b. Industry-wide awareness of the under-ride issue, and the FMEA and due care exercised by all sport utility manufacturers, except Chrysler w.r.t. the ZJ-body and WJ-Body versions of the Jeep Grand Cherokee, is the focus of the instant litigation.

THE SAFETY LEARDERSHIP TEAM (SLT) ENDORSES THE REAL-WORLD

40. SLT duties included the monitoring of competitive safety activity. On March 16, 1993 I played a CBS News 60 Minutes television video tape wherein safety in rear end collisions, and competitive practices and attitudes toward safety were presented. American and Japanese manufacturers refused to be interviewed for the February 16, 1992 program. But MercedesBenz safety engineer Dr. Tom Bologa was interviewed, and stated:

"At Mercedes-Benz we test to see what is going-on in the real world."

The SLT unanimously endorsed this MercedesBenz interview comment regarding the "real world" and also unanimously agreed to the following concepts/realities:

a. The NHTSA regulatory process was fatally flawed, and frequently did not formulate requirements that could be reasonably expected to protect our customers in foreseeable accidents,

b. Merely complying with NHTSA so-called safety standards was not a moral or legally viable approach to the SLT mission of offering true safety leadership,

c. Compliance with NHTSA regulations was merely a "starting point" that was required of all manufacturers, and the SLT would look instead to the "real world" for its guidance exercising due care and therefore protecting our customers

As SLT chairman I authored minutes of March 16, 1993 meeting which were distributed throughout the Chrysler organization, including Mr. Francois J. Castaing, then Executive Vice President of Chrysler Engineering. I was subsequently informed by Mr. Ronald S. Zarowitz, the representative from the Chrysler Regulatory Affairs Office, that:

"Castaing is livid"

Mr. Zarowitz also informed me that Mr. Castaing was demanding that all copies of the SLT meeting minutes for March 16, 1993 be *"retrieved and destroyed."* I retrieved all copies of the SLT meeting minutes for March 16, 1993, but refused to destroy all of copies, retaining two copies in my SLT office files.

41. On December 16, 1994, Assistant Chrysler Corporate Counsel and Lead Product Liability Counsel Mr. Lewis H. Goldfarb ordered that my office be entered and all my office files and personal possessions be confiscated. At the time that Chrysler Security and Personnel representatives performed this "office raid" it was known that I was out-of-town for the Christmas holidays:

a. As of this report, all of my personal possessions have <u>still</u> not been returned,

b. All previous computer hard drive and computer floppy disk files have never been produced in-tact, despite fifteen-plus years of subpoena requests from plaintiffs,

c. All previous office and safety files have never been produced in-tact, despite fifteen years of subpoena requests from plaintiffs. Failure to produce includes but is not limited to the following files relevant to the instant litigation (Attachment E):

i. "Safety Leadership Team – Meeting Minutes"

ii. "Rear Crash Survivability – General"

iii. "FMVSS – 301"

iv. "IIHS Bumper Tests"

42. Subsequent to the order issued by Mr. Goldfarb, I was sued without service or notification and was placed under an *ex parte* "muzzle order" by a Michigan judge:

a. Chrysler legal representative Mr. Thomas Keinbaum later amended the original lawsuit to include a "damages" claim of $82,000,000.00 for an 88-second interview I granted ABC News 20/20 regarding lack of crashworthiness in Chrysler vehicles. No other entity that participated in the 20/20 program was sued, just the former chairman of the Chrysler Safety Leadership Team, who had direct knowledge of Chrysler safety programs and defect issues (Paul V. Sheridan),

b. The details of what motivated the $82,000,000.00 "damages" claim, as well as the Chrysler practices/attitudes toward NHTSA are summarized in Attachment F.

OPINIONS AND CONCLUSIONS

O&C-1 At the time of its approval by Chrysler executive management the ZJ-Body iteration of the Jeep Grand Cherokee represented the only SUV that was sold with a fuel tank located behind the rear axle, below the rear bumper, and without adequate shielding and protection from foreseeable real-world rear under-ride collisions. During the engineering design & development phase, Vice President of JTE, Mr. Francois J. Castaing, and his staff were made aware of the dangers to Chrysler customers created by this "fundamental safety defect," in both official JTE Engineering Program reviews and his ongoing/concurrent participation in recreational on-road/off-road events (See ¶ 32).

O&C-2 The issue of offering fundamental protection against direct collision impact to the ZJ-Body fuel tank during the real-world rear-end underride accident scenario focused discussion on the offering a fuel tank skid plate as standard equipment. Although not yet designed for the ZJ-Body, the fuel tank skid plate was in-use and available for the Jeep vehicles for at-least the ten years prior to ZJ-Body approval. The JTE staff discussion to offer the skid plate as standard equipment was rejected by JTE Engineering Programs Management on the following basis:

a. The overall safety strategy deployed in the ZJ-Body program was to merely comply with NHTSA requirements, and use then-upcoming compliance as justification for not incurring the base vehicle cost increase (approximately $35 in 1987).

b. The skid plate as standard equipment would reduce overall corporate profits through elimination of two existing revenue sources:

i. Option profits resulting from the customer choosing the "Fuel Tank Skid Plate Shield," option code XEE,

ii. Option profits resulting from the customer choosing the "Fuel Tank Skid Plate Shield," through dealership sales via MOPAR,

c. It was later openly admitted to the Jeep dealerships that use of the skid plate "repaired" issues related to fuel tank safety (See ¶ 21).

O&C-3 In my expert experience I have personally/professionally examined the consumer response to safety recalls. This response rate, or yield, is dependant on the safety issue involved and, although the precise statistics are claimed to be a "trade secret" by the automotive industry, it is well-known that the highest safety defect recall yield by far correlates to customer notices that involve the elimination/reduction of a vehicle fire risk:

a. I am confident that if the SUSAN MORRIS KLINE family had been made aware of the salient facts contained in the main portion of this report and was offered, in a formal Chrysler recall, a retrofit that afforded the protection of a "Fuel Tank Skid Plate Shield," they would have responded responsibly by having their 1996 Jeep Grand Cherokee retrofitted by a competent Jeep dealer (See ¶ 21-c-i):

OPINIONS AND CONCLUSIONS – con't

i. The issuance-of and service response-to safety defect retrofit recalls is well-known to defendant Loman Auto Group. Approximately five years prior to the accident of February 24, 2007 that took the life of SUSAN MORRIS KLINE, defendant Loman Auto Group was notified of, and potentially performed fire-related retrofits of a competitive brand (e.g. Service Part Numbers 3W7Z-9B007-AA, 3W7Z-9B007-BA and 3W7Z-9B007-CA).

O&C-4 In an effort to alert the existing 1993-1998 ZJ-Body (and 1999-2004 WJ-Body) owners of the risk of fire related death of severe injury, I granted an interview with ABC News television which was aired on October 7, 2009:

a. In an effort to effect correction of the fundamental safety defect in 1993-1998 ZJ-Body and 1999-2004 WJ-Body vehicles, I participated in the authorship and submission of a petition to NHTSA which demands a full safety defect investigation of, and subsequent retrofit recall of these vehicles. Discussion of this petition was the focus of an ABC News follow-up which aired on October 9, 2009 (Attachment G).

O&C-5 I am of the expert opinion that if Chrysler management had exercised due care and issued a directive to Chrysler Engineering that a ZJ-Body FMEA be deployed to ascertain the failure modes associated with the underride accident scenario, the protection afforded by a "Fuel Tank Skid Plate Shield" would have emerged from the FMEA as one solution to the accident sequence of February 24, 2007 that took the life of SUSAN MORRIS KLINE.

O&C-6 I am of the expert opinion that a ZJ-Body FMEA, deployed to ascertain the failure modes associated with the underride accident scenario, would have confirmed that the ZJ-Body fuel tank location (behind the rear axle in the "crush zone" and without adequate shielding/protection from foreseeable real-world collisions) represented/represents a fundamental safety defect that is not contained in any other competitive sport utility vehicle:

a. The 2011 Jeep Grand Cherokee (WL-Body), which was reportedly heavily influenced by direct inputs/routine contacts from MercedesBenz engineers in Stuttgart, Germany, and will also use many MercedesBenz components, retains the safety-prioritized design philosophy of the "real world" by continuing to fully shield the fuel tank (with a skid plate) and by locating the fuel tank in front of the rear axle similar to the WK-Body, which has experienced **zero** fire-related deaths/injuries since introduction in model year 2005.

O&C-7 In my expert experience and opinion, safety is <u>not</u> an engineering issue *per se*, safety is a management issue.

ATTACHMENT A

EXPERT WITNESS REPORT - 2 January 2012 REVISION

Kline v. Loman Auto Group, Victoria Morgan-Alcala, et al.

Page Range 1

Page 29

IN RECOGNITION OF

EXCELLENCE IN ACHIEVING

...to be the BEST

"Your Personal Best"

1985

Advance Product Planning Office

to be the Best Goals

PAUL V. SHERIDAN

L. A. Iacocca

E. A. Reickert

P. C. Badore

J. M. Hossack

H. E. Cook

K. S. Mack

ATTACHMENT B

EXPERT WITNESS REPORT - 2 January 2012 REVISION

Kline v. Loman Auto Group, Victoria Morgan-Alcala, et al.

Page Range 1

Page 31

Critics rave about Cummins-powered Ram pickups

If a Dodge Ram outfitted with the Cummins 5.9-liter turbo diesel engine were to race a Ford or Chevy truck up a Colorado mountain road, there would be no question who would win. The Dodge Ram would sail up the mountain, while its Chevy and Ford counterparts chugged along in its dust.

In fact, in just about any endurance competition imaginable, the Dodge Ram truck would obliterate its competition.

This is not frivolous hype or propaganda generated by zealous marketing types. The example is based on testimonials by industry trade journals.

For instance, *Road Test Magazine* writes, "The Dodge-Cummins pickup outdistances its Ford and Chevy counterparts in every meaningful category."

"Dodgzilla" is a term coined by *Four Wheeler* magazine to describe the Dodge Ram pickup.

Why the acclaim? The engine powering the Dodge Ram—the Cummins diesel 5.9-liter six-cylinder turbo engine—has no equal, according to Paul Sheridan, Jeep®/Truck Engineering Engine Program Manager. It's the only factory-installed turbo diesel available in a pickup.

Referred to by Sheridan as the "Ferrari of the diesel engines," the Cummins is largely responsible for the recent success of Dodge Ram trucks in the marketplace.

The Cummins engine is in nearly half of all Dodge full-size pickup trucks sold. Dodge sold 30,000 turbo diesel pickups in the 1990 model year and projects sales of 44,000 units in 1991.

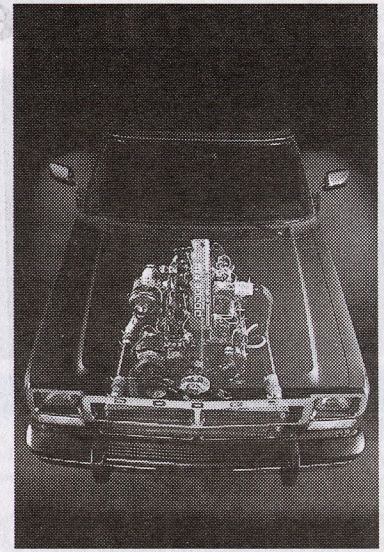

The Cummins engine is in nearly half of all Dodge full-size pickup trucks sold. Dodge sold 30,000 turbo diesel pickups in the 1990 model year and projects sales of 44,000 units in 1991.

"We are approaching 50 percent of Ford's volume after only three years in the diesel business," Sheridan added. "Our problem is not demand, but supply of available engines from Cummins. We can't fill customer orders fast enough."

The 1989 model year production was sold by December 1988, and 1990 production sold out by February 1990.

"We can't determine how great the demand is, because we haven't hit the ceiling yet," Sheridan said.

A diesel engine survey found that if given the option, one out of four Ford and General Motors diesel pickup buyers would pay an extra $1,000 for a truck powered by a Cummins engine.

The engine was first used in the Dodge Ram full-size pickup trucks in 1989, but preparations to modify a Cummins diesel for the truck date back to 1985.

Jerome Magid

Among the Cummins diesel team members who worked to ensure a smooth launch were, from left, Eugene Shensky, Product Change Analyst; Ken Scobel, Cummins On-Time Assembly; Walter Ralph, Vehicle Development Specialist; Troy Simonsen, Product Planning Manager; Greg Henderson, Design Aids Supervisor; and Paul Sheridan, Engine Programs Manager.

Eight Chrysler employees, part of the core Truck Operations group, approached the Cummins people namely because at the time the company was "the only game in town," Sheridan said. Ford was getting its diesel engines through Navistar, and General Motors manufactured its own and purchased some from Detroit Diesel.

Chrysler provided Cummins with a Dodge Ram truck and the assignment of making a Cummins diesel engine that could fit into the chassis.

Cummins completed its assignment and the engine is now available in the Ram D-250 and D-350, both two- and four-wheel drive.

"We achieved this success over the years using a skeleton crew, minimal budget and a complicated but necessary release program," Sheridan said.

In addition to offering an engine intercooler to meet strict emissions standards, the 1991-1/2 model offers a four-speed automatic overdrive transmission that will boost the truck's current top speed of 80 mph and further improve its fuel economy and performance.

December 1990
Design Engineering/Manufacturing Cost Reduction Results

Digest

In the News

STANDARD & POOR'S placed the Big Three automakers on its CreditWatch list Jan. 9 because of a worsening economic picture.

Chrysler said, "We are, of course, disappointed... but given the difficult environment the industry is in, we can understand their concern. We know our minivans and sport utilities face increasing competition, but are confident that they remain the class of the field and able to withstand the assault."

Chrysler will have an opportunity to present its case to Standard & Poor's.

Innovation

AL BARRETT, Mark Huber, Mike Larson, Don McCutcheon and Jim Pitt represented Chrysler in accepting an award from the Society of Automotive Plastics for the company's use of plastic in body interiors. In conjunction with Entech, Rockwell and General Electric, the group developed a plastic bolster that saves $18 per vehicle and 8.3 pounds in body weight. The bolster is used in the Eagle Premier and Dodge Monaco.

People

IN THE DODGE/WJR RADIO Quest for Excellence music competition, Beth Barley took first place and won a $5,000 scholarship. She is the daughter of Lou Barley, a tool engineer from Chrysler's Mound Road Engine Plant in Detroit.

Communication

ATTACHMENT C

EXPERT WITNESS REPORT - 2 January 2012 REVISION

Kline v. Loman Auto Group, Victoria Morgan-Alcala, et al.

Page Range 2

Pages 33 - 34

Thursday, January 17, 1991 Vol. 11, No. 2

CHRYSLER CORPORATION

Times

A weekly newspaper for Chrysler employees and their families

Lutz named Chrysler Corporation President

Chrysler reorganizes to promote teamwork

Chrysler made a series of organization changes Jan. 14, most of which are designed to strengthen the company's commitment to the platform team concept.

• Robert Lutz has been named President of Chrysler Corporation. His former title, President of Chrysler Motors, as well as the title of Chairman of Chrysler Motors, have been discontinued. Lutz is responsible for all North American automotive activities including sales, marketing, product development, procurement and supply, and manufacturing. He is also responsible for Acustar, Chrysler's parts subsidiary, and Chrysler operations in Mexico.

In addition, four general managers were appointed to coordinate all product development and market and consumer inputs for both current and future product lines. The four appointees are all currently company vice presidents and will retain their present areas of responsibilities in addition to their new general manager duties. All four executives report to Lutz.

• Ronald Boltz has been appointed General Manager—Small Car Operations and con-

see **Platform,** *page 4*

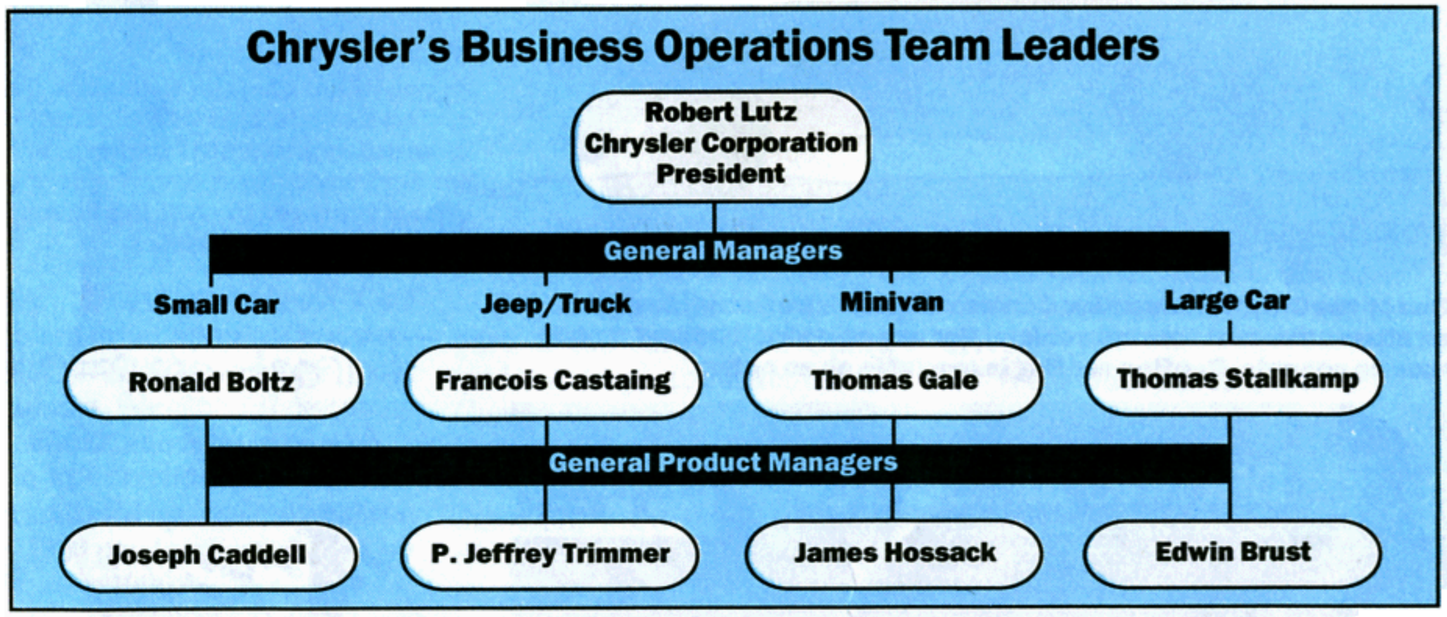

Briefs

Gulf crisis prompts security measures

Chrysler Security and Fire Prevention departments have increased precautionary security measures at U.S. manufacturing plants and major office locations in response to the Persian Gulf situation and the possibility of terrorist attacks.

Many of the preparations may not be noticeable, but increased personal identification and vehicle checks at traffic gates may result in delays while entering or leaving Chrysler facilities.

The Security Office also asked that employees notify local security personnel if they hear or notice anything out of the ordinary—for example, a package in an unusual location or unknown people or vehicles loitering around plant entrances.

International travel curtailed

Chrysler Special Security Operations issued a travel advisory suspending all international business travel with the exception of

brand-name drug whose patent has expired. A generic drug is sold under a common or "generic" name for that drug, not the brand name. Generics often become available for sale shortly after the patent on the brand-name product expires. And generic drugs usually cost less than brand-name drugs, yet work just as well.

There are more than 200 manufacturers of generic drugs in the United States. Some companies make only generic drugs while other companies make generic drugs.

If you have a specific question about your prescription, ask your pharmacist. In about two out of three cases, when a generic drug is available, the pharmacist will dispense a generic drug rather than a brand-name drug. This is because generic drugs cost less and save patients money, and they usually achieve the same medical results.

If you're concerned about the safety of your generic product, ask your pharmacist. Pharmacists receive bulletins from the Remember, if you have a prescription that you are supposed to take until it is gone, do not stop taking it unless you have checked with your physician or pharmacist.

If your doctor determines it is medically necessary for you to receive a brand-name drug, he or she will write "DAW" (dispense as written) on the prescription. If your doctor does not specify DAW, and you request the brand-name drug from the pharmacist, you will be responsible for the difference in cost.

Market share ceiling sought

continued from page 1

increase in Japanese U.S. transplant production in recent years," Iacocca said.

"With their U.S. transplant factories producing 1.5 million units annually and growing, and with Japan's market share in the United States at 30 percent and growing, now would be an appropriate time for Japan to agree to a total market share restraint that would include both transplant and imported units.

"This approach would allow continued growth in U.S. tra plant operations while Japan built-up imports, which cont no U.S. added value and supp no U.S. manufacturing jo would decline," Iacocca said.

Following Japan's annour ment on import restraints, 1 members of Congress release letter they sent to Japan's Pri Minister Toshiki Kaifu expre ing disappointment in Japa response to the Gulf crisis a urging "meaningful" restrai on auto exports. Ford Chairn Harold Polling also called Japan to roll back its exports.

Platform team concept expands; general managers named

continued from page 1

tinues as Vice President—Product Strategy and Regulatory Affairs.

- Francois Castaing has been appointed General Manager—Jeep/Truck Operations and continues as Vice President—Vehicle Engineering.
- Thomas Gale has been appointed General Manager—Minivan Operations and continues as Vice President—Product Design.
- Thomas Stallkamp has been appointed General Manager—Large Car Operations and continues as Vice President—Procurement and Supply.

Chrysler Chairman Lee Iacocca said, "The platform team concept we launched for the development of the new LH program is succeeding beyond our most optimistic expectations.

"The cross-functional teamwork idea is working so well that we decided to apply it to all of our product lines and broaden it to include not only the product development process, but also the important market and consumer inputs necessary to bring world-class vehicles to market.

"These new general managers," Iacocca added, "will be positioned to pull it all together because that's what it's going to take to compete in the '90s—great products totally in sync with our customers."

The new Business Operations activities will be organized on a cross-functional team basis and will incorporate Chrysler's existing platform team functions, expanded to include representatives from planning, sales, marketing, service and consumer activities.

Each of the team managers will have a general product manager:

- Edwin Brust has been appointed General Product Manager—Large Car.
- Joseph Caddell has been appointed General Product Manager—Small Car.
- James Hossack has been appointed General Product Manager—Minivan.
- P. Jeffrey Trimmer has been appointed General Product Manager—Jeep/Truck.

Chrysler also announced that Thomas Denomme has been named Executive Vice President—Corporate Staff Group. He had been Vice President—Corporate Planning and External Affairs.

Effective with this change, Anthony St. John, Vice President—Employee Relations, and Gino Giocondi, Vice President—Quality and Productivity, will now report to Denomme. They had reported to Lutz.

Denomme's responsibilities include Strategic Planning, Communications, Civic and Government Affairs, and Washington Affairs, in addition to Employee Relations and Quality and Productivity.

Concurrently, Corporate Economist Donald Hilty is reassigned from Denomme to Chrysler Corporation Vice Chairman R. Steve Miller Jr.

Times

Chrysler Times is published by Communication Programs, a department of Chrysler Corporate Communications, for all Chrysler employees, retirees and their familie Comments or questions should be addressed to:

CHRYSLER TIMES
Allan Nahajewski, Editor
Pamela M. Gross, Associate Editor
CIMS 416-13-06
Highland Park, MI 48288-1919

News updates are available daily through the *Chrysler Employee New Daily* system. Call tieline 876-2345 or, via computer, touch PF1 on the InfoCenter Main Menu.

Chrysler Times is printed on recyclable paper.

ATTACHMENT D

EXPERT WITNESS REPORT - 2 January 2012 REVISION

Kline v. Loman Auto Group, Victoria Morgan-Alcala, et al.

Page Range 6

Pages 36 - 41

Summary of Performance Appraisal Comments
Filed by Chrysler Executives
Covering a Two Year Evaluation Period

Subject: Paul V. Sheridan
Reference: Minivan Safety Leadership Team

"Paul (Sheridan) does a thorough, detailed, organized, and tireless job. He became an active promoter of advancing safety in the (minivan) program only slowing when the reality of the interest from management became apparent to him..."

Ronald S. Zarowitz
Manager, Safety Office, (810) 576 - 7305
October 10, 1994

"(Paul Sheridan) has directed various team efforts well, with a strong goal orientation, especially the (minivan) Safety Leadership Team..."

Mark W. Clemons
Manager, Chrysler-Plymouth Marketing, (313) 956 - 3763
October 14, 1994

"Overall I think Paul (Sheridan) has done an excellent job...He has been eager to get involved...Always very open and candid...good planning skills...Good team leader..."

Bernard E. Swanson
Executive Engineer-Minivan Platform
October 16, 1994, (810) 576 - 2908

"Paul (Sheridan) did a good job as Chairman of the Minivan Safety Leadership Team...He brings a valuable engineering perspective to his product planning role...He is willing to speak up when he disagrees, which is good..."

Scott A. Sullivan
Manager, Market Research
October 12, 1994

"I find (Paul Sheridan) to be very innovative and certainly not afraid to push the envelope. His professional yet open demeanor easily wins the respect of his colleagues. He is extremely knowledgeable, and may well be one of the best all around technical persons on staff...Paul is a valuable asset to the (minivan) platform and I rely on him to accomplish our mutual goals"

Paul T. Doolan
Engineering Programs Manager-Minivan
October 10, 1994, (810) 576 - 4837

MULTIPLE INPUT FORM – CONFIDENTIAL

The use of this form is optional. If it is used, however, the guidelines on the back of this form must be followed. Multiple input can provide supervisors with valuable, additional information to consider when completing employee appraisals and development plans. Your input regarding the employee's past year's results and behaviors is appreciated.

Employee Name Paul Sheridan Date 10-10-94

Provider Name (Optional) Ron Zaroweitz How Long Have You Worked with the Employee? 2 years

Relationship to Employee:

____ Customer ____ Supplier ✓ Team Member ____ Subordinate ____ Peer ____ Other ____

RESULTS:

Please provide a brief summary of the employee's success or difficulty in fulfilling his or her job duties related to you. Include specific examples and results.

Paul does a thorough, detailed, organized, and tireless job. He became an active promoter of advancing safety in the NS program, only slowing when the reality of the interest from management became apparent to him. He created & led NS SLT to point of making data-based recommendations to NS management.

BEHAVIORS:

Please list areas where you feel the employee excels or has opportunity for development. Keep in mind the following behaviors:

Innovation/Risk Taking Continually attempts to push forward/try something new/ be inventive.

Teamwork Very interested in team dynamics consensus-building - good leader.

Encouraging/Valuing Diversity Different backgrounds/points-of-view sought out, encouraged.

Communication/Openness/Candor Direct, honest. to the point of being blunt

Continuous Process Improvement (no basis to evaluate)

Planning/Priority Setting Organized NS SLT & ran group effectively/ efficiently. Developed plan to prioritize group objectives.

Problem Solving Creative, up to point of "hitting the wall" - then process steps.

Leadership - good · encourages group input - leads group to make progress - has vision of ultimate goal.

Customer Responsiveness (no basis to evaluate)

Technical Expertise

People Management/Development (for supervisors only)

OTHER COMMENTS OR CONCERNS:

Very strong candidate who could work on achieving "grace under fire" - temper sometimes comes through too quickly when frustrated.

Please return to Dennis Malecki (Name) by _____ (Date)

Thanks!

MULTIPLE INPUT FORM - CONFIDENTIAL

The use of this form is optional. If it is used, however, the guidelines on the back of this form must be followed. Multiple input can provide supervisors with valuable, additional information to consider when completing employee appraisals and development plans. Your input regarding the employee's past year's results and behaviors is appreciated.

Employee Name ***Paul Sheridan*** Date ***October 14, 1994***

Provider Name ***Mark Clemons*** How long have you worked with the Employee? ***2 Years***

Relationship to Employee:

Customer Supplier ***X*** Team Member Subordinate Peer Other

RESULTS:

Please provide a brief summary of the employee's success or difficulty in fulfilling his or her job duties related to you. Include specific examples and results.

Paul has been successful in his duties, especially with the NS teams that he chairs. He is also an enthusiastic team member.

BEHAVIORS:

Please list areas where you feel the employee excels or has opportunity for development. Keep in mind the following behaviors:

Innovation/Risk Taking

Teamwork
Good team player. Assumes team goals well and works aggressively to accomplish team objectives.

Encouraging/Valuing Diversity
Paul is aggressive, opinionated and persistent, traits which can be assets when moderated. However, he occasionally allows his personal views to compromise his effectiveness.
Communication/Openness/Candor
Clear and concise. Expresses views well, both orally and written.

Continuous Process Improvement

Planning/Priority Setting
Has directed various team efforts well, with a strong goal orientation (especially the NS Safety Leadership Team leading up to the NS safety research).
Problem Solving
Good analytical skills. Researches issues well. Brings facts to bear for decision making purposes.

Role Model Behavior/Leadership
Effective in chairing NS Safety Leadership, NS Complexity and NS Exterior Ornamentation teams. Leads discussions well and assists teams in developing necessary outputs.
Customer Responsiveness
Keeps commitments to teams and team members.

Technical Expertise
Displays good understanding relating to chassis items and exterior ornamentation.

People Management/Development (for supervisors only)

OTHER COMMENTS OR CONCERNS:

Please return to ***Dennis Malecki*** by ***October 19, 1994***

Name Date

THANKS!

MULTIPLE INPUT FORM – CONFIDENTIAL

The use of this form is optional. If it is used, however, the guidelines on the back of this form must be followed. Multiple input can provide supervisors with valuable, additional information to consider when completing employee appraisals and development plans. Your input regarding the employee's past year's results and behaviors is appreciated.

Employee Name Paul Sheridan **Date** 10-16-94

Provider Name (Optional) B. E. Swanson **How Long Have You Worked with the Employee?** 2+ YRS ?

Relationship to Employee:

____ Customer ____ Supplier ___+___ Team Member ____ Subordinate ____ Peer ____ Other _____

RESULTS:

Please provide a brief summary of the employee's success or difficulty in fulfilling his or her job duties related to you. Include specific examples and results.

OVERALL I THINK PAUL HAS DONE AN EXCELLENT JOB IN CHAMPIONING REDUCTION IN COMPLEXITY. FROM A CHASSIS PERSPECTIVE, HE HAS BEEN EAGER TO GET INVOLVED IN ISSUES PRESENTED TO HIM. SOMETIMES IT APPEARS HE TAKES ISSUES AS WORK OR A "PERSONAL ISSUES" RATHER THAN AN "EXPOSE THE BUSINESS" FOCUS WHICH I THINK FRUSTRATES HIM WHEN HIS VIEW IS NOT ACCEPTED OR ACTIONED ON. THIS DOES NOT APPEAR TO AFFECT HIS EFFECTIVENESS, HOWEVER, IS A SOURCE OF FRUSTRATION TO HIM.

BEHAVIORS:

Please list areas where you feel the employee excels or has opportunity for development. Keep in mind the following behaviors:

Innovation/Risk Taking

Teamwork

Encouraging/Valuing Diversity

Communication/Openness/Candor – ALWAYS VERY OPEN AND CANDID WITH ME.

Continuous Process Improvement

Planning/Priority Setting DEMONSTRATES GOOD PLANNING SKILLS.

Problem Solving

Leadership TAKE INITIATIVE TO ADDRESS ISSUES. LEADS THE CHARGE

Customer Responsiveness HAS BEEN VERY RESPONSIVE TO CHASSIS ISSUES.

Technical Expertise – ADEQUATE TO MORE THAN ADEQUATE FOR CHASSIS.

People Management/Development (for supervisors only)

OTHER COMMENTS OR CONCERNS:

PAUL HAS A TENDENCY TO GAMBLE ABOUT THINGS WHICH I THINK IS MOSTLY A "PERSONALITY" THING.

Please return to Dennis Malecki **by** _____
Name Date

Thanks! DENNIS, SORRY ABOUT THE QUALITY OF MY WRITTEN RESPONSE. I WOULD BE GLAD TO DISCUSS PAUL

GOOD TEAM LEADER. HAS DONE WELL. HIS FOR EXPANDED ITS

MULTIPLE INPUT FORM – CONFIDENTIAL

The use of this form is optional. If it is used, however, the guidelines on the back of this form must be followed. Multiple input can provide supervisors with valuable, additional information to consider when completing employee appraisals and development plans. Your input regarding the employee's past year's results and behaviors is appreciated.

Employee Name Paul Sheridan Date 10/12/94

Provider Name (Optional) Scott Sullivan How Long Have You Worked with the Employee? 15 MONTHS

Relationship to Employee:

____ Customer ____ Supplier _X_ Team Member ____ Subordinate ____ Peer ____ Other _____

RESULTS:

Please provide a brief summary of the employee's success or difficulty in fulfilling his or her job duties related to you. Include specific examples and results.

PAUL DID A GOOD JOB AS CHAIRMAN OF THE MINIVAN SAFETY LEADERSHIP TEAM DURING THE TIME I WORKED WITH THAT GROUP. HE ACTIVELY PARTICIPATES IN THE PST DISCUSSIONS, AND HE BRINGS A VALUABLE ENGINEERING PERSPECTIVE TO HIS PRODUCT PLANNING ROLE.

BEHAVIORS:

Please list areas where you feel the employee excels or has opportunity for development. Keep in mind the following behaviors:

Innovation/Risk Taking - HE IS WILLING TO SPEAK UP WHEN HE DISAGREES, WHICH IS GOOD.

Teamwork

Encouraging/Valuing Diversity

Communication/Openness/Candor - HIS ARGUMENTS ARE, AT TIMES, A BIT TOO EMOTIONAL. THIS CAN

Continuous Process Improvement WORK AGAINST HIM IN TRYING TO CONVINCE OTHERS.

Planning/Priority Setting - IN A FEW INSTANCES WITH THE SAFETY LEADERSHIP TEAM PAUL GOT

Problem Solving BOGGED DOWN IN DETAILS WHEN THE GROUP WAS READY TO MOVE

Leadership FORWARD.

Customer Responsiveness

Technical Expertise

People Management/Development (for supervisors only)

OTHER COMMENTS OR CONCERNS:

Please return to Dennis Malecki by _____
Name Date

Thanks!

MULTIPLE INPUT FORM – CONFIDENTIAL

The use of this form is optional. If it is used, however, the guidelines on the back of this form must be followed. Multiple input can provide supervisors with valuable, additional information to consider when completing employee appraisals and development plans. Your input regarding the employee's past year's results and behaviors is appreciated.

Employee Name Paul Sheridan Date 10/10/94

Provider Name (Optional) PAUL DOOLAN How Long Have You Worked with the Employee? _____

Relationship to Employee:

____ Customer ____ Supplier ✓ Team Member ____ Subordinate ____ Peer ____ Other _____

RESULTS:

Please provide a brief summary of the employee's success or difficulty in fulfilling his or her job duties related to you. Include specific examples and results.

Some specific examples of Paul's contributions include: tire & wheel plan, suspension complexity reduction matrix, powertrain plan, tire & wheel volumes, and recently exterior ornamentation items.

BEHAVIORS:

Please list areas where you feel the employee excels or has opportunity for development. Keep in mind the following behaviors:

Innovation/Risk Taking

Teamwork

Encouraging/Valuing Diversity

Communication/Openness/Candor

Continuous Process Improvement

Planning/Priority Setting

Problem Solving

Leadership

Customer Responsiveness

Technical Expertise

People Management/Development (for supervisors only)

As a fellow member on several teams with Paul, I find him to be very innovative and certainly not afraid to push the envelope. His professional yet open demeanor easily wins the respect of his colleagues. He is extremely knowledgeable, and may well be one of the best all around technical persons on staff. He is detail oriented, and works hard at his craft. His work on complexity reduction demonstrates good planning and problem solving skills. He is also a very capable communicator, both written and verbal, and appears well organized.

OTHER COMMENTS OR CONCERNS:

Paul is a valuable asset to the platform, and I rely on him to accomplish our mutual goals

Please return to Dennis Malecki by _____

Name Date

Thanks!

ATTACHMENT E

EXPERT WITNESS REPORT - 2 January 2012 REVISION

Kline v. Loman Auto Group, Victoria Morgan-Alcala, et al.

Page Range 4

Pages 43 - 46

LAW OFFICES

CHAMBERS STEINER

A Professional Corporation

1490 FIRST NATIONAL BUILDING
DETROIT, MICHIGAN 48226-3592

Telephone (313) 961-0130
Fax (313) 961-8178

KALAMAZOO OFFICE
7040 STADIUM DRIVE
KALAMAZOO, MICHIGAN 49009
Telephone (616) 375-4300
Fax (616) 375-4077

ROSEVILLE OFFICE
25235 GRATIOT AVE.
ROSEVILLE, MICHIGAN 48066
(810) 773-3455

JOHN F. CHAMBERS
SANFORD L. STEINER
MICHAEL S. MAZUR
ALEXANDER T. ORNSTEIN
DARRELL M. AMLIN
COURTNEY E. MORGAN
JEFFREY T. MEYERS
ANGELA J. NICITA
LOUIS G. COREY
JOHN I. KITTEL
RICHARD J. CAROLAN
MICHELLE J. HARRISON
PATRICIA A. MURRAY
CHRISTOPHER S. HARTMAN
FRANKLIN J. CHAMBERS
MARTIN R. STURM
KEVIN P. BURCH
DOUGLAS A. MERROW
LISA A. KLAEREN
FRANK B. MELCHIORE
DANIEL C. BROWN

July 14, 1995

Thomas G. Kienbaum, Esq.
500 Woodward Ave., Suite 4000
Detroit, Michigan 48226-3406

Re: Chrysler vs. Sheridan

Dear Mr. Kienbaum:

I am in receipt of your most recent correspondence regarding the magistrate's recommendation and our providing of information to you regarding office materials. I do not know how you could have reasonably concluded from the correspondence that was forwarded to you that we are of the opinion that there is no basis to conclude that evidence may have been tampered with in this case. Indeed, the anxiety exhibited by the fact that you immediately faxed your reply to me suggests that in reality you hold the opposite opinion. Due to the necessity of my attendance at federal court in Wichita, Kansas this week, I did not believe that I was going to be able to comply with the July 14, 1995 deadline. Now, it appears that we are in a position to comply.

The information provided hereunder is based upon our limited and restricted ability to review materials which were allegedly seized from Mr. Sheridan's work space. That review is neither complete, nor did it have as its purpose the ferreting out of all details of evidence tampering which may exist. Lack of inclusion of any specific item in this list shall not be taken as an admission of the authenticity of such a document or other tangible item.

The document submitted by the plaintiff entitled, "Confidential Inventory of Material from Paul V. Sheridan's Cubicle at the Chrysler Technology Center", dated March 16, 1995, has numerous general inconsistencies and inaccuracies based on defendant's knowledge and cursory examination of the actual inventory:

1. This "inventory" fails to list and does not contain the following files:

- Liftgate Latch - General
- Liftgate Latch - Competitive
- Safety Leadership Team - Meeting Minutes
- Safety Leadership Team - Preliminary
- Liftgate Latch - Safety Office
- H. G. Cook Study
- FMVSS 206 - General
- Seat Back Strength - General
- Seat Back Strength - FMVSS 207 Specifications
- Offset Impact - General
- Rear Crash Survivability - General
- FMVSS - 301
- Side Crashworthiness Issues
- FMVSS - 214
- Bumper Issues - General
- NS-Body Bumper
- Taillamp Studies - Zarowitz
- Amber Taillamp - NS-Body
- Rear Seat Headrest - General and Zarowitz
- Back-up Light - General

2. The "inventory" lists files but inaccurately portrays their original/current contents:

- Box #1 - File "NS Liftgate System". This file contained subfiles such as "Customer Injury", "Saginaw", et al. Also contains photographs that were originally in the "Liftgate Latch - General" file which is missing per #1 above. (see page 4 of inventory).

- Box #1 - File "NHTSA News" contains only half its original contents (see page 4 of inventory).
- Box #1 - File on "Muth Technologies" not listed; subfile "RSZ" not listed (see page 4).

- Entry on page 8 of inventory indicates that a file contained "correspondence for Dr. Detroit Motorsports". No correspondence was ever sent to Mr. Sheridan's Chrysler office for Dr. Detroit Motorsports, nor was any on file at that location.

3. The "inventory" identifies files and file locations by box number but the location identified was found to be inaccurate.

4. The "inventory" fails to explain/list file materials that were found in the actual inventory by defendant:

- Documents relating to FMVSS-208 dated December 21 were found in Box #1 in file "NS-Restraints". This file is not listed on inventory. (see page 4)

5. This "inventory" fails to accurately explain/list documents allegedly found in the cubicle, as described during the deposition of plaintiff's investigators.

6. The "inventory" fails to list files that were found in the actual inventory.

7. The "inventory fails to list/identify location of specific video tapes:

- Environmentally Safe Oil Changes
- Formula SAE
- IIHS Bumper Tests
- Etc.

8. The "inventory" fails to accurately list contents of computer disks and computer hard drive.

This response is not complete. Further examinations of inventory is still pending. Preliminary examinations cover documents listed through page 18, but not Box #7. Document listings from page 18 through 39 have not yet been examined.

Sincerely,

Courtney E. Morgan, Jr.

CEM/mn
cc: George Googasian, Esq.
(Via Facsimile)

ATTACHMENT F

EXPERT WITNESS REPORT - 2 January 2012 REVISION

Kline v. Loman Auto Group, Victoria Morgan-Alcala, et al.

Page Range 200

Pages 48 - 247

Open Letter of 27 October 1999 to United States Attorney General Janet Reno

From:

Paul V. Sheridan, Former Chairman of the Chrysler Minivan Safety Leadership Team (SLT) and 2005 Civil Justice Foundation National Champion

Subject :

Department of Justice Assistance to Special Interests : Chrysler Corporation, FOIA Lawsuits and the NHTSA Defect Investigation Conspiracy

Opening Paragraph:

"I am currently the defendant in the largest damages claim against an individual citizen in the history of the United States: **$ 82 Million** (Tab 1). The original lawsuit was filed *ex parte* by Chrysler Corporation during Christmas 1994. Aware that I was never notified of the December 27th hearing, and had no legal counsel present, Judge Hilda Gage of Michigan's Oakland Circuit Court issued a "muzzle order" against me. The damages portion involves my March 1995 interview with ABC News 20/20, and my statements regarding the defective Chrysler minivan liftgate latch. Chrysler lawyer Steve Hantler exclaimed:

"We may ask for more . . ."

President of the Michigan Bar, Thomas Keinbaum, the lawyer who filed the damages claim, refuses to comment publicly. The implicit purpose of the $ 82 Million claim is the intimidation of any employee(s) whose opinion(s) regarding safety defects is opposed by Chrysler management. The theme of intimidation is repeated throughout this discussion (Tab 2) . . .

22357 Columbia Street
Dearborn, MI 48124-3431
313-277-5095

27 October 1999

Honorable Janet Reno
Attorney General of the United States
Department of Justice - Room 4545
950 Pennsylvania Avenue
Washington, D. C. 20530-0001

Subject : Department of Justice Assistance to Special Interests - Chrysler Corporation : FOIA Lawsuits and NHTSA Defect Investigation Conspiracy

Dear Madam Attorney General :

I am currently the defendant in the largest damages claim against an individual citizen in the history of our nation : **$82 million** (Tab 1). The original lawsuit was filed *ex parte* by Chrysler Corporation during Christmas 1994. Aware that I was never notified of the December 27th hearing, and had no legal counsel present; Judge Hilda Gage of Michigan's Oakland Circuit court issued a "muzzle order" against me. The damages portion involves my March 1995 interview with *ABC News 20/20*, and my statements regarding the defective Chrysler minivan liftgate latch. Chrysler lawyer Steven Hantler exclaimed :

"We may ask for more . . ."

President of the Michigan Bar, Thomas Kienbaum, the lawyer who filed the damages claim, refuses to comment publically. The implicit purpose of this $82 million claim is the intimidation of any employee whose opinion(s) and action(s) regarding safety defects is opposed by Chrysler management. The theme of intimidation is repeated throughout this discussion (Tab 2) .

THE NHTSA DEFECT INVESTIGATION AND THE FRAUDULENT "NON - RECALL"

In September 1993 NHTSA opened an investigation into the Chrysler minivan liftgate latch (PE93-084). This occurred only after a highly visible accident in Virginia. By January 1994 NHTSA escalated their inquiry to a engineering analysis (EA94-005). On November 17, 1994 a secret meeting was held in Washington between Chrysler and NHTSA where the EA94-005 conclusion was presented (Tab 3) :

"The latch failure is a safety defect that involves children."

On March 27, 1995 Chrysler held a "Service Action" press conference. It was announced that 1984 to 1994 minivan liftgate latches could be replaced (Tab 4). International customers were not notified or offered the same service. Bud Liebler of public relations emphasized the following rhetoric :

"Remember, NHTSA has not determined that there is a defect."

Chrysler executives Chris Theodore, Dale Dawkins, Lewis Goldfarb and Chief Counsel William O'Brien were in attendance. This event, and the Liebler statement, were covered by innumerable media outlets.

Shortly thereafter, sales executive Ted Cunningham sent a letter to four million minivan owners. His letter announced the existence of the Chrysler minivan hotline (Tab 5). The letter was <u>not</u> sent to International minivan owners, nor was an international hotline established. Cunningham reiterated :

"There has been no formal determination that a safety defect exists with minivan latches."

However, by September 1995 NHTSA was compelled to ostensibly feign ignorance, and deny knowledge of these widely publicized Chrysler pronouncements. NHTSA's denial occurred only after exposure of the blatant falsehoods being communicated by hotline operators (Tab 6). The falsehoods were presented on national television. Both Chrysler and NHTSA refused to be interviewed by *A Current Affair*. (Tab 7).

At the March 27, 1995 Service Action press conference the following exchange took place:

Question : *"Does the NHTSA investigation still officially **remain open** pending this **non-recall**?!"*

Goldfarb : *"The investigation does continue to **remain open** so that they (NHTSA) can monitor the response rate that we get to the contacts with owners, as well as our PR campaign."*

Question : *"What response rate do you have to attain for NHTSA to be satisfied?"*

Goldfarb : *"We don't have a specific rate in mind. This is a very unusual campaign."*

I agree with Goldfarb's assessment, *"This is a very unusual campaign"*. In late 1995 Goldfarb declared that the service action was non-binding; stating that Chrysler was "free to discontinue" at any time (Tab 4). However, on March 28, 1995 I gave a second interview with *ABC News 20/20*. I declared Chrysler's so-called Service Action, not just "unusual", but an outright fraud. My primary basis was that the proposed replacement latches would not, and have not corrected the safety defect. I also charged that the replacement latches had not been funded or manufactured; therefore none were available for the "campaign". In the epilogue of the October 27, 1995 <u>airing</u> of *20/20*, reporter Jim Walker explained to anchor Hugh Downs :

"But I must tell you, we called around to some dealerships today which (still) don't have them."

It would take a full year thereafter (September 1996) before latches finally became available for all (Tab 8).

The notion implied by Goldfarb, that a government investigation needs to exist so that someone can "monitor the response rate" is preposterous. Data collection systems, such as those run by automobile companies for quality or warranty, have been in place <u>for decades</u>. As detailed below, the "open" status was part of a secret Chrysler/NHTSA agreement; a ruse specifically deployed to thwart FOIA requests.

<u>FREEDOM OF INFORMATION ACT (FOIA) REQUESTS DENIED</u>

Chrysler originally proclaimed that the EA94-005 tests were "flawed" (Tab 9). In response, Ralph Hoar and accident victims filed FOIA requests with NHTSA. Eventually Hoar filed a lawsuit which contested NHTSA's refusal to comply. Chrysler filed numerous briefs in vigorous support of the NHTSA refusal. The stated FOIA refusal rationale was that the NHTSA defect investigation was "open".

By August 1995 the court compelled NHTSA to release the EA94-005 materials to the public (Tab 10). The release occurred on October 25, 1995. The documents proved that NHTSA had originally intended to declare the Chrysler latch a "safety defect", and therefore alert the public of a genuine safety recall. A defect status was my well-known opinion for the three years prior to my *ex parte* dismissal of December 19, 1994. Chrysler management was aware of my various contacts with NHTSA during that period. On December 16, 1994 I confirmed with Chrysler my intention to report minivan safety defect concerns to NHTSA. Chrysler Security then raided my office *ex parte,* and confiscated eleven years of file materials. As of this writing, even my personal property has not been returned (Tab 11).

THE *EX PARTE* MICHIGAN MUZZLE ORDER - THE CRUCIAL ONE-YEAR PERIOD

During the one year period between 1) the secret Chrysler/NHTSA meeting of November 17, 1994, 2) the issuance of the *ex parte* "muzzle order" against me, and 3) the court-ordered release of EA94-005 materials on October 25, 1995, **at least ten additional deaths and severe injuries occurred that have been directly attributed to the latch defect.** Both American and Canadian children were involved. Several of these tragedies were presented by *ABC News 20/20*. Again, like their behavior on *A Current Affair,* both Chrysler and NHTSA refused to be interviewed for the *20/20* program (Tab 8).

EVIDENCE OF CONSPIRACY : INTIMIDATION OF NHTSA BY CONGRESS

Over the last five years, scores of lawsuits involving the defective latch have been lost or settled by Chrysler. My testimony was central to one of the largest verdicts levied against an auto manufacturer in history : **$262.5 million** (Tab 12). Shocking evidence was disclosed at this September 1997 federal trial in South Carolina. Since, Chrysler has declined to defend themselves in open court on the latch defect issue.

The January 7, 1998 *CBS News* program *Eye-On-America* presented aspects of the $262 million verdict; highlighting the deposition of Chrysler chairman Robert Eaton (Tab 13). New evidence proved that close contact between Eaton/Chrysler and two Congressmen took place during the crucial one year period described above.

John Dingell (D-MI) and Mike Oxley (R-OH) were part of the Chrysler plan to intimidate NHTSA. These congressmen, who share NHTSA budgetary oversight, sought to subvert the agency's intention to announce the latch a "safety defect". Their January 17, 1995 letter to NHTSA Administrator Martinez feigns concern over an investigation involving a non-Chrysler product; that GM investigation was long-closed (Tab 14). *CBS News* interviewed Deputy Administrator Phil Recht regarding the true intent of the Dingell/Oxley letter. Recht refused to confirm the internal NHTSA interpretation. **But we have now confirmed in *my* lawsuit that the Dingell/Oxley letter was understood by NHTSA to be one of willful intimidation regarding public disclosure of the EA94-005 *conclusion;* as presented to Chrysler on November 17, 1994** (Tab 15). Dingell, Oxley and Chrysler all refused to be interviewed.

CBS News requested an interview but I declined; due to an upcoming Chrysler latch failure death case in Los Angeles. Chrysler settled the Ornelas case in March 1998. However, what was not presented by *CBS News* was that **the Department of Justice was also central to the conspiracy to conceal the EA94-005 conclusion** during 'The *Ex Parte* Michigan Muzzle Order - The Crucial One-Year Period'.

EVIDENCE OF CONSPIRACY : CONCEALMENT SUPPORTED BY THE **DEPARTMENT OF JUSTICE**

The August 28, 1997 deposition of Eaton demonstrated that my *ex parte* dismissal from Chrysler was essential to a "business as usual" scheme; executed by the highest levels of Chrysler management and their legal counsel. It was a scheme based on arrogance, ignorance and a disregard of the laws of the United States. Below I present how I attempted to remedy this archaic attitude, as it related to the safety of minivan customers. My efforts involved creation of the minivan Safety Leadership Team (SLT). I was aware of the internal political risks. But I how could I have anticipated the behavior of the **Department of Justice?**

On page 104 of the Eaton deposition, Exhibit 21 is reviewed (Colored Tab). Plaintiff lawyers John Gerstein and Mikal Watts pose a simple question to Eaton (Tab 16) :

Q : *"In paragraph one, you got NHTSA to agree that they would deny all Freedom of Information Act requests to place their investigative files including the [EA94-005] crash test video in the public record* ***and that the Justice Department would defend any lawsuits seeking to compel production under the Freedom of Information Act; is that correct?*** *"*

Eaton confirms his awareness of the conversations between Chrysler and the **Department of Justice** :

A : *"That was while the investigation was going on, I assume. Obviously they were ultimately released, so there wasn't - you know, I don't know."*

Q : *"I think there was a lawsuit to get them!"*

Note that Eaton emphasizes "while the investigation was going on". The ruse which declared that EA94-005 remained "open" as a basis for the FOIA denials, was known to, and supported by the **Department of Justice**. At no time did Chrysler declare that the NHTSA crash test information was a "trade secret". (The lawsuit refers to the Hoar case mentioned on page 2 above.)

On June 4, 1999 my attorney, Courtney Morgan, conducted the Robert Lutz deposition. Lutz was vice chairman of Chrysler, reporting directly to Eaton. Lutz confirms that he too was aware of the conspiracy with the **Department of Justice** to thwart the FOIA lawsuits (Tab 17).

The moral significance of this conspiracy was fully understood by the jury in South Carolina (Tab 12). For example, paragraph 3 of Eaton deposition Exhibit 21 and Lutz Exhibit #3 declares :

"The Department of Justice says there is less than a 50/50 chance of keeping the video off the record for the full duration of the investigation, i.e. the campaign, if there is a court ruling. Given the possibility that a lawsuit could be filed at any time, they anticipate that the legal process would take at least four months, regardless of the outcome." (Colored Tab)

It is clear that elaborate exchanges took place between Chrysler, NHTSA, and the **Department of Justice**. At no time has any witness, in any case related to these matters, denied that these exchanges took place.

The subject of these exchanges was the joint Chrysler/NHTSA/DOJ conspiracy to keep the EA94-005 investigation files obscured from the public. The scheme between Chrysler and your Department was not offered into evidence at the Hoar FOIA case. This covert activity by the **Department of Justice** is the opposite of what was begun with the minivan Safety Leadership Team (SLT).

THE CHRYSLER MINIVAN SAFETY LEADERSHIP TEAM - THE FIRST OF ITS KIND

At the close of 1991, my boss Richard Winter wrote into my performance appraisal :

> *"Very good at bringing forward new concepts and technology that could lead to competitive advantage . . . Very good at monitoring safety and regulatory needs."*

My aptitude for automobile safety was well-known long before I conceptualized the SLT (Tab 18). I deemed the SLT necessary as a result of at least three events in the minivan market during 1992. These events exposed the archaic but pervasive management/government attitude toward safety :

1) In June 1992, two infants were ejected from a Chrysler minivan after the liftgate latch failed. Both infants died. The other passengers, which remained inside the minivan, survived. This accident occurred in Mount Pleasant, Michigan (Tab 19). The Hartshorne case was settled on the very same day that Oakland Circuit Court issued their *ex parte* muzzle order against me : December 27, 1994.

2) In September 1992, George Baird was killed during an accident in Virginia. In what would otherwise have been a survivable accident, his Chrysler minivan seat failed during a rear end collision. Baird then lost vehicle control, and was killed. I later testified in the Baird case which Chrysler settled for several million dollars.

3) It became increasingly obvious during 1992 that competitive activity in minivan safety was a threat to Chrysler's safety leadership claims. This was especially true with respect to the Ford Windstar.

Tom Gale, vice president-minivan, appointed me as chairman of the SLT in December 1992 (Tab 20). The SLT was comprised of mostly engineers, and also included representatives from sales, marketing, consumer research, manufacturing, competitive information, government affairs, product planning, finance, et al. There were fifteen highly qualified members. Our main concern was the safety and well-being of minivan owners and passengers.

I also conceived the SLT in the 'team format' for the explicit purpose of usurping the "business as usual" approach to safety. **This archaic attitude denigrates safety to court room ruses, government regulatory bureaucracy, or the motivations and unsubstantiated opinions of executives; supported and eventually defended by their sycophantic lawyers.** My motivation was to elevate management of the safety issue to a broad-based expertise and consensus. In retrospect, this was a bold and somewhat naive endeavor; given the entrenched and powerful constituencies of the "business as usual" approach. With these and other aspects of our SLT mission well-understood, it was my task as chairman to determine how to re-establish and maintain true leadership.

THE SLT ENDORSES THE **REAL WORLD** ALA MERCEDES - BENZ

In March 1993 I played a *CBS News 60 Minutes* video tape at an SLT meeting (Tab 21). The *60 Minutes* program depicted the attitude that NHTSA and most automobile companies had with respect to safety. NHTSA, and those auto companies which were/are the defendants in numerous (seat failure) lawsuits, refused to be interviewed for the *60 Minutes* program . . . the prominent exception was Mercedes-Benz.

Dr. Tom Bologa of Mercedes-Benz safety engineering was interviewed by reporter Ed Bradley about their approach to safety. Dr. Bologa explains :

> *"Mercedes-Benz tests with the weight of a person in the seat . . . To simulate what's going on in the* ***real world.***"

The SLT unanimously endorsed using the "real world" as a starting point in our mission to provide true safety leadership. The SLT, like most working-level staff, made compelling observations. For example :

1. There was nothing "real world" in the fact that after the Hartshorne infants were killed, Chrysler did no (crash) testing whatsoever to determine if the liftgate latch was adequate. Indeed, subsequent to this accident, we were directed not to document any SLT discussions/recommendations regarding the liftgate latch defect. There was nothing "real world" in the legal ruse that NHTSA did not (then) require a safety standard for the minivan liftgate, despite a 1990 petition : PE90-079 (Tab 22).

2. There was nothing "real world" about not adding approximately $5.00 to the seat hardware, which would have kept George Baird alive. There was nothing "real world" about seat standard FMVSS-207 which NHTSA officials had openly admitted was inadequate.

3. There was nothing "real world" about crashworthiness standards such as FMVSS-208 which encourage air bag deployment force levels that protect adult male dummies in a compliance test, but decapitates children or smaller women during a parking lot bump (Tab 23).

4. There was nothing "real world" about completely ignoring what is called 'offset', despite knowing that it was a statistically significant crash mode, and as such is required in Europe (Tab 24).

5. There was nothing "real world" about Chrysler's testing for side crash standards (FMVSS-214) without "fuel" in the test vehicle gas tank! NHTSA has now escalated their investigation of the resulting safety defect on the 1996 through 1999 Chrysler minivans under EA99-013 (Please see "BLATANT DUPLICITY OR LESSONS LEARNED ?" discussion under Tab 25).

The SLT unanimously agreed with the attitude demonstrated by Mercedes-Benz. I published meeting minutes that summarized the strong SLT reaction to the *60 Minutes* program; especially the "real world" approach to safety leadership. As usual, these minutes were distributed to upper Chrysler management. Within days I was told that Francois Castaing, executive vice president of engineering, was "livid". Castaing ordered that I "retrieve and destroy" the minutes. I retrieved the minutes but retained two copies in my SLT file. However, Judge David Breck of Oakland Circuit Court has recently ordered that discovery regarding the whereabouts of these and many other file documents are **banned** from my lawsuit against Chrysler (Tabs 11 & 26).

The "retrieve and destroy" directive and other malicious management directives were endured during the two years of SLT existence; rendering our efforts and recommendations unheeded. Mere weeks prior to the Chrysler raid of my office, Ron Zarowitz of Government Affairs hand-wrote the following 1993/1994 performance appraisal comment (Tab 27):

> *"Paul (Sheridan) does a thorough, detailed, organized, and tireless job. He became an active promoter of advancing safety in the (minivan) program* ***only slowing when the reality of the interest from management became apparent to him."***

Top management permanently disbanded the SLT on November 7, 1994 (Tab 28). It appeared that our work would end; never to be heard of again. I did not anticipate that my position as chairman of the SLT would eventually become a discussion item for the highest court in the United States.

UNITED STATES SUPREME COURT CASE #96-653 : PAUL SHERIDAN, KEN STARR ET AL.

In March 1997 I was contacted by associates of Professor Lawrence Tribe. Tribe is the Constitutional law professor at Harvard University. His Massachusetts and Washington associates had been introduced to my person/case by the *ABC News 20/20* program (Tab 8).

USSC case #96-653 involved the notion that a Michigan state court could assist corporate suitors when the latter sought to deny a plaintiff's access to testimony/evidence for product liability cases; despite when such lawsuits are filed in non-Michigan federal courts (?). **Ken Starr of Whitewater ilk** had been retained by defendant General Motors. Starr essentially argued that testimony involving the safety and well-being of taxpayers should not be subject to "full disclosure". Many felt this demonstrated Starr's blatant duplicity. For example, in the Clinton/Lewinsky sexual matter he demanded the exact opposite : complete disclosure.

Arguments were heard on October 17, 1997. On January 13, 1998 the Supreme Court ruled unanimously against Starr and his corporate client(s). When asked by the *Detroit News* for public comment, I tried to emphasize a subtle theme of my Safety Leadership Team (SLT) concept (Tab 29) :

> *"In the long run, eliminating the muzzle order (legal) option will ultimately reduce product liability litigation by ensuring that safety is prioritized."*

The SLT concept, which predated this ruling by over five years, demanded the opposite of that argued by Starr. The Chrysler/NHTSA/DOJ conspiracy to deny public access to the November 1994 conclusion of EA94-005, during 'the crucial one-year period' is even more abhorrent (see page 3 above). In this context, let us review **just one** example of the "real world" implication(s) of this conspiracy.

THE BRANDON AUER DEATH CASE - A LESSON FROM THE **REAL WORLD**

In early September 1995, the Auer family was driving their Chrysler minivan on a familiar Illinois road. The other driver ran a stop sign, and collided with the Auer minivan. Mr. and Mrs. Auer were in the front seats; their doors did not open, and they walked away from the accident. Alex was in the middle seat; his door did not open, and he walked away from the accident.

Nine-year-old Brandon was in the rear seat. He was wearing seat belts. During the accident the latch failed and the liftgate opened. Brandon and the minivan seat were both ejected through the liftgate opening. Brandon did not walk away from the accident. **Brandon was pronounced dead at the scene.**

At the time of this accident, I was under an *ex parte* muzzle order issued in behalf of Chrysler by Michigan's Oakland Circuit Court. At the time of this accident, Chrysler and NHTSA were declaring that the EA94-005 liftgate latch defect investigation was "open" , and therefore citizens such as the Auer family were not allowed to know the results of testing *that their taxes had funded.* Prior to and at the time of Brandon's death, agreements were in effect between Chrysler, NHTSA and the **Department of Justice,** as documented by the first paragraph of Eaton deposition exhibit #21, and Lutz exhibit #3 (Colored Tab) :

> ***"NHTSA has agreed that they will deny all FOIA requests to place their investigative files, including the [EA94-005] crash test videos, on the public record and that the Department of Justice will defend any lawsuits seeking to compel production under FOIA."***

I am confident that if the Auers had been allowed to view the real world crash test videos which were presented to Chrysler on November 17, 1994; that Brandon would be alive today. I am confident that if the Auers had known of my recommendations regarding minivan seats and liftgate latches, unfettered by Chrysler's *ex parte* muzzle order; that Brandon would be alive today. **I am confident that if the Auer family was aware of Eaton deposition exhibit #21 and Lutz deposition exhibit #3, prior to their September 1995 accident; that Brandon would be alive today.**

(Brandon's parents were interviewed for the October 27, 1995 airing of ABC News 20/20 ; see Bud Liebler December 8, 1995 letter to Brandon's elementary school teacher - Tab 8. Also review March 27, 1995 "Service Action" announcement made by Liebler - Page 1 above.)

PRODUCT LIABILITY "REFORM" : A VIEW FROM THE WHITE HOUSE

In mid-March 1996 I was telephoned by White House staff member Jim Dorskin. He announced that President Clinton was "deeply concerned" that an upcoming vote in Congress on a product liability reform bill might have enough support to be "veto proof ". Dorskin was requesting my availability for testifying before a Senate committee regarding my experiences with Chrysler. The portent of my testimony would have presumably supported opposition to the bill; at least to the extent that, if passed, President Clinton could still exercise his veto. Later I was chaperoned by Mike Fuller, and had conversations with Steve Nolet of the White House staff.

I made myself, and relevant public documents available for review by Dorskin/Fuller. I shipped these documents to the White House via Fedex on at least two occasions (Tab 30). Dorskin later exclaimed that he was very excited about my availability/testimony, and that I had been added to the list of witnesses. As I recall, the bill was not voted on, because the two-thirds support never materialized.

It is clear that President Clinton was, and is still opposes any government activity that directly or indirectly threatens the rights of individual American citizens, especially when these Constitutional rights have a demonstrated effect on their safety and well-being. The taxpayer has also heard Al Gore proclaim this **"pro consumer"** sentiment as intrinsic to his bid for the Democratic presidential nomination.

THE PUBLIC'S RIGHT-TO-KNOW

It is deeply ironic that I write this letter to a United States Attorney General that was twice nominated by a Democratic White House. Famously, and perhaps historically, it has been the Democratic Party that has proclaimed its commitment to 'The Public's Right-To-Know'. Nowhere had this political mandate been realized more profoundly than when Democratic President Jimmy Carter enacted the Freedom of Information Act (FOIA). **The primary beneficiary of FOIA is the common U.S. taxpayer.**

When I review the implications of the subject with common taxpayers, they are outraged. Indeed, I could present this and related (Chrysler minivan safety) subjects in more depth and breath than any other : As founding chairman of the minivan Safety Leadership Team (SLT), I was responsible for doing just that. However, additional evidence surrounding this subject only corroborates far greater offenses than what has been introduced above (Please see question VII below).

As their Attorney General, I believe that the public has the right-to-know your opinion(s), and your intended administrative response, to the subject. In this context I pose the following initial questions :

I. Do you believe in the First Amendment to the Constitution? Do you believe it protects my right as an American citizen to provide an interview to the media without the abuse-of-court process, and intentional intimidation exemplified by the Chrysler damages claim of $82,000,000 ? In this context, especially as it relates to limiting compensation awarded to injury/death plaintiffs; is it double-dealing when special interests like Chrysler vigorously lobby for "product liability reform" ?

II. Do you believe that automotive crash test information, which confirms the contemporaneous existence of a safety defect; whether it involves liftgate latches or crashworthiness, should be treated as a "trade secret" ? "Confidential" ? "Proprietary" ?

III. Do you believe that information such as that discussed in II should be obscured from the public under the guise of an "open investigation" , despite the fact that injury and death were **known** to be occurring, known to be involving children; **during the time the obscuring took place** ? Do you believe that information/conclusions such as that generated by NHTSA during 1994 under EA94-005 should be disclosed sooner rather than later, so that affected (Chrysler minivan) owners can make informed and timely decisions regarding their safety and well-being ? Please respond to this question in the context of the Brandon Auer tragedy discussed on page 7 above.

IV. In the context of public service, do you feel that it is proper behavior of U. S. Congressmen to assist special interests such as Chrysler Corporation with the intimidation of a safety regulatory agency such as NHTSA ?

V. Do you believe that a safety regulatory agency such as NHTSA should capitulate, under the legal and financial power of major automotive companies and their lobbying organizations; and enact safety standards that have little or no relevance to the "real world" ?

VI. Do you believe that an individual, that has direct knowledge and expertise regarding the existence of defective components (or practices) that are currently in the public domain; has the right and responsibility to inform the appropriate government agencies such as NHTSA of same, without the use/threat of professional, emotional, financial or physical harm ? *Ex Parte* lawsuits ? (Tab 31)

VII. Do you believe that individuals that commit acts of commission or omission of a wanton or willful nature, showing a reckless or indifferent disregard of the rights of others, under circumstances reasonably calculated to produce injury or death, or which make it not improbable that injury or death will be occasioned, and these individuals know or are charged with knowledge of the probable result of their acts; are culpable or criminal ?

VIII. Do you believe that it is a responsibility of the **Department of Justice** to provide legal assistance in civil lawsuits in behalf of special interests such as Chrysler Corporation, whether directly or indirectly (i.e. inter-agency protocol) , for the explicit purpose of obscuring vital safety information from the taxpayer; **information that is explicitly available under the Freedom of Information Act**; during a period of time that injury and death were known to be continually and predictably inflicted on innocent children ? Do you believe that legal assistance of this type is consistent with the call to "use government . . . to further the common good" ?

IX. Were you directly or indirectly aware that the conspiracy discussed above, and confirmed by Eaton and Lutz, and documented on Eaton deposition #21 and Lutz deposition exhibit #3, had in fact occurred between Chrysler, NHTSA and the **Department of Justice** ?

IT TAKES A VILLAGE : AND OTHER LESSONS CHILDREN TEACH US ??

In her book, First Lady Hillary Clinton proclaims :

> *"For the sake of our children, we ought to call an end to false debates between values and policies. Both personal and mutual responsibility are essential, and we should work to strengthen them at all levels of society. Let us admit that some government programs and personnel are efficient and effective, and others are not. Let us acknowledge that when it comes to the treatment of children, some individuals are evil, neglectful, or incompetent, but others are trying to do the best they can against daunting odds and deserve not our contempt but the help only we--through our government--can provide. Let us stop stereotyping government and individuals as absolute villains or absolute saviors, and recognize that each must be part of the solution.* ***Let us use government, as we have in the past, to further the common good."***

I am confident the First Lady would be appalled with the subject; and how related events destroyed the well-being of an Illinois family during the 'crucial one-year period' in 1995 (page 3). I am equally confident that "A Village" cannot be taught lessons from our children . . . if they are dead.

Sincerely and respectfully,

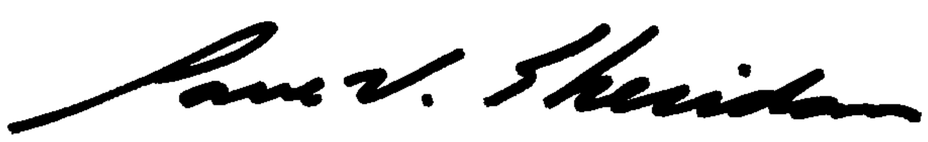

Paul V. Sheridan
Ex-chairman :
Chrysler minivan Safety Leadership Team

attachments

Chrysler Minivan Liftgate Latch Failures : Known Injury and Death Accidents *

THE *EX PARTE* MICHIGAN MUZZLE ORDER - THE CRUCIAL ONE-YEAR PERIOD

December 27, 1994
Oakland Circuit Court Issues Ex Parte Restraining Order Against Paul V. Sheridan

through

October 27, 1995
Date of Airing of ABC News 20/20 Program featuring Sheridan interview about latch*

Listed by Month in 1995:

January 1995

Ornelas v Chrysler ; Date of Accident : January 21, 1995
Lorena Casteneda, 2 years old, Killed
Diana Perez, 3 years old, Killed
Arecelas Casteneda, 20 year old man, Killed
Iscelas Ornelas, 21 year old woman, Killed

Pinkston v Chrysler ; Date of Accident : January 31, 1995
Jeff Pinkston, injury/death status TBD

Vega v Chrysler ; Date of Accident : January 1, 1995
Daniel Vega, injury/death status TBD

February 1995

Haas v Chrysler ; Date of Accident : February 6, 1995
Frank Haas, injury/death status TBD

March 1995

Bonnici v Chrysler ; Date of Accident : March 3, 1995 - Featured on Canadian News/TV
Thomas Bonnici, 5 year old boy, Killed

Woodard v Chrysler ; Date of Accident : March 11, 1995 - Featured on *ABC News Inside Edition*
Crystal Woodard, 8 year old girl, Killed
Tyndall Woodard, boy, serious injury
Sherri Lynn Woodard, girl, minor injury

Stewart v Chrysler ; Date of Accident : March 16, 1995
Michael Stewart, injury/death status TBD

March 1995 con't

Danish v Chrysler ; Date of Accident : March 17, 1995
Anjum Danish, injury/death status TBD

Vela v Chrysler ; Date of Accident : March 26, 1995
Maria Vela, injury/death status TBD

April 1995

None Admitted to by Chrysler

May 1995

Bordelon v Chrysler ; Date of Accident : May 8, 1995
Terry Bordelon, injury/death status TBD

June 1995

Ramjohn v Chrysler ; Date of Accident : June 5, 1995
J. Ramjohn, injury/death status TBD

Riley v Chrysler ; Date of Accident : June 25, 1995
Renada Riley, injury/death status TBD

July 1995

(Chrysler Files 'Contempt of Court' Allegation against Sheridan, Morgan and Mazur)

Zimmerer v Chrysler ; Date of Accident : July 2, 1995
Dylan Zimmerer, injury/death status TBD

Maxwell v Chrysler ; Date of Accident : July 4, 1995
Karle Maxwell, injury/death status TBD

Tatom v Chrysler & Prudhomme v Chrysler ; Date of Accident : July 16, 1995
Bernadine Tatom, girl, injury/death status TBD
Cynthia Prudhomme, girl, injury/death status TBD

Abercrombie v Chrysler ; Date of Accident : July 21, 1995 - Featured on ABC News 20/20*
Van Nguyen, woman, amputation of left arm
Mark Jones, 20 year old, serious injury
Tyler Hearndon, 7 year old boy, minor injury
Kim Nguyen, 30 year old woman, serious injury
Dao Nguyen, 70 year old woman, killed

July 1995 con't

Matthews v Chrysler ; Date of Accident : July 24, 1995
Stevie Weston, 14 year old girl, paraplegic

August 1995

Gross v Chrysler ; Date of Accident : August 12, 1995 (not listed on Eaton Exhibit #40)
Sandra Tate Gross, woman, killed
Tiffany Grady, woman, serious injury
Alica Gross, girl, serious injury
Cedric Gross, man, minor injury
Billy Ray Gross, Jr., man, minor injury

Yoo v Chrysler ; Date of Accident : August 24, 1995
Soo Ok Yoo, injury/death status TBD

September 1995

Auer v Chrysler ; Date of Accident : September, 4, 1995 - Featured on ABC New 20/20*
Brandon Auer, 8 year old boy, Killed

Duke v Chrysler ; Date of Accident : September 22, 1995
Lois Duke, girl, injury/death status TBD

Cockerel v Chrysler ; Date of Accident : September 24, 1995
K. M. Cockerel, injury/death status TBD

October 1995

Edwards v Chrysler ; Date of Accident : October 25, 1995
Chris Edwards, boy, injury/death status TBD

Hong v Chrysler ; Date of Accident : October 26, 1995
Sok Hong, unknown, injury/death status TBD

* Source : Chrysler submission to NHTSA.

Colored Tab

DEPOSITION EXHIBIT (R.A.LUT 2) #3 RAZ 6/4/99
PENGAD-Bayonne, N. J.

PRODUCED

MINIVAN LATCH ISSUE

Proposed Agreement with NHTSA

1. **Crash Test Video and the Public Record:**

- NHTSA has agreed that they will deny all FOIA requests to place their investigative files, including the crash test video, on the public record and that the Department of Justice will defend any lawsuits seeking to compel production under FOIA.

- We would agree with NHTSA that their engineering analysis will remain open while we conduct the service campaign to provide them additional bases to argue that release of the materials would interfere with their investigation.

- The Department of Justice says there is less than a 50/50 chance of keeping the video off the record for the full duration of the investigation, i.e. the campaign, if there is a court ruling. Given the possibility that a lawsuit could be filed at any time, they anticipate that the legal process would take at least four months, regardless of the outcome.

2. **Service Action Only - No Recall:** NHTSA has agreed that a Chrysler service campaign would fully satisfy all of their concerns and they would give full public support to such an effort. The critical elements that differentiate the service campaign from a recall (mostly reflected in the two attached letters) are as follows:

- no admission of defect or safety problem;

- stated purpose of the campaign - to ensure peace of mind in light of media coverage;

- campaign does not count as a NHTSA action - not included in NHTSA recall numbers, no Part 573 or Part 577 letters;

- statements to owners, the public and NHTSA assert that no defect has been found; and

- NHTSA acknowledges that replacement latch is not a 100% solution.

Eaton
EXHIBIT NO. 21
8-28-97
M. MOORE

DOCUMENT PRODUCED PURSUANT TO PROTECTIVE ORDER IN CHRYSLER

3. Chrysler Announcement: Chrysler controls publication of its action with the following provisions:

- Chrysler goes first with its own statement and reads approved NHTSA statement supporting Chrysler's action;

- Chrysler characterizes campaign as done solely to ensure the peace of mind of its owners, i.e. "your concern is our concern";

- Letter from Martinez to Chrysler and NHTSA press statement praise Chrysler action as fully satisfying all of NHTSA's concerns and state that Chrysler is a safety leader;

- NHTSA officials acknowledge publicly that there has been no finding of defect and that there will be none; and

- NHTSA officials acknowledge that owners should not be concerned over the delayed implementation of the action and that they can best protect themselves by keeping seat belts buckled at all times.

4. Additional Provisions: The following points have been requested by NHTSA and appear to be reasonable:

- The letter to owners makes reference to the NHTSA hot line phone number;

- Latch replacement will be offered as part of any routine minivan servicing (once replacement latches are available);

- Chrysler will submit six quarterly reports on the progress of the campaign (helps to support defense of FOIA requests); and

- NHTSA can make reference to the service campaign in response to owner inquiries.

DOCUMENT PRODUCED PURSUANT TO PROTECTIVE ORDER IN SUBJECT TO CHRYSLER

TAB 1

Advertising
Classifieds
Personals
Job listings
Model Homes
Place an ad

Essentials
Editorials
Horoscope
Lottery
Weather
Death Notices
CyberSurvey
Search Engine
Back Issues
Site highlights

News Sections
Accent
Autos
Business
Casino Guide
Comics
Comic Books
Cyberia
Food
Homestyle
Letters
Metro
Money
Movie Finder
Nation/World
Next!
Obituaries
Outlook
On Detroit
Pets
Rearview Mirror
Screens
Showtime
TV Listings
Voices

Sports Sections
Sports
Lions
Pistons
Tigers
Wings
College
U-M
MSU
State Colleges
High Schools
Motor Sports
Golf Guide

Chrysler sues former employee for $82 million in minivan affair

By Kenneth Cole / Detroit News Washington Bureau

Sheridan

WASHINGTON -- Chrysler Corp. is seeking $82 million from a former safety staffer-turned-whistleblower who's testifying in high-stakes lawsuits involving latch designs on the automaker's older minivans.

The demand, long kept secret, was disclosed in a just-settled rear liftgate latch lawsuit in Los Angeles.

The $82-million figure represents Chrysler's estimate of its losses following an October 1995 interview of Dearborn resident and former Chrysler employee Paul Sheridan on ABC-TV's 20/20 news program.

Legal experts say it may be the largest sum ever sought from a whistleblower by a corporation.

It is only one highlight of Ornelas vs. Chrysler, which was settled for an undisclosed amount this week in Los Angeles Superior Court. The case involved four passengers allegedly ejected from a Chrysler minivan in a low-speed crash in 1995.

"I don't track it, but I'd be surprised if an individual has ever been sued for more by a corporation," said Clarence Ditlow, executive director of the Center for Auto Safety in Washington, D.C. "It is reflective of how much a whistleblower can cost a company -- especially when it's tried to cover up a defect."

Tom Kienbaum, the Birmingham attorney representing Chrysler in its lawsuit against Sheridan, was not available for comment.

David Tyrrell, the company's lead counsel in the minivan-latch lawsuits, described Sheridan as "a disgruntled former employee."

Chrysler fired Sheridan in December 1994 for allegedly disseminating secret crash-test data on the 1996 minivan. It sued him in Oakland County Circuit Court later that month for "in excess of $10,000."

The company amended the lawsuit in the fall of '95 after Sheridan appeared on 20/20 and said the company knew its minivan latches weren't strong enough to secure the rear liftgate in even low-speed

Scoreboards
Sports Talk
Wing Nuts

Contacts
By e-mail
Post letters to The News
Person-to-person
Staff addresses
By phone
Departments and editors
Circulation
Home delivery

Search

accidents.

According to federal regulators, malfunctions with Chrysler minivan latches have resulted in at least 37 deaths and 100 serious injuries.

Sheridan, 45, declined to comment. His attorney, Courtney Morgan of Detroit, said Chrysler contends in the lawsuit that Sheridan's interview hurt sales of its 1996-model minivans. They had just gone on the market when the TV show aired.

"Never mind the fact that Paul never said a word about the 1996 minivans on the show," Morgan said.

The $82 million Chrysler is seeking from Sheridan is based on lost sales and how much it figures it would have had to spend on television ads rebutting Sheridan's interview.

"But even if that logic holds, how the hell can you get the money if you never spent it?" argued Morgan, who is representing Sheridan in a countersuit against the automaker.

Elletta Callahan, a professor of law and public policy in Syracuse University's School of Management, concurred Chrysler will have a difficult time collecting, saying: "It's always difficult to prove lost profits."

Chrysler attorneys apparently believe it will be equally difficult to convince juries that there never was a problem with its pre-1995-model minivan latches. The Ornelas case is the third the company has settled this year since a South Carolina jury rendered a record $262.5-million verdict in a similar case.

"They recognize that if a juror sees all the evidence they'll lose over and over again, so they're paying very large and very secret amounts of money to keep that from happening," said Mikal Watts, a Corpus Christi, Texas, attorney representing many plaintiffs in latch lawsuits against the company.

Ken Gluckman, assistant general counsel for product liability litigation at Chrysler, said the settlements simply reflect a flawed judicial system.

"The sad truth is that in today's judicial system, jurors can do anything," he said. "They're guided by emotion and aren't controlled by factual circumstances."

Four passengers -- including 1-year-old Lorena Casteneda and 4-year-old Diana Perez -- were allegedly ejected from the back of a Chrysler minivan in a low-speed crash in Los Angeles on Jan. 21, 1995, in the Ornelas case.

Gluckman noted 13 people were riding in the minivan designed for seven. Many were unbelted, he said, and there's evidence the minivan driver may have run a light.

"The plaintiffs in this case broke three laws," Gluckman said. "Yet we're supposed to be the evil ones."

Larry Grassini, the plaintiff's attorney in Ornelas, said his client "made a mistake by allowing so many people to ride" in the minivan.

"But that was a short-term mistake," he said. "Chrysler knew about their's for a long time."

Grassini said six of the 12 Ornelas jurors and one of the four alternates accepted questions from attorneys after the case was settled. He said they told a Chrysler jury consultant they would have wanted to hear from Sheridan, had the case gone trial.

"The jurors saw him as a key witness in what many of them said seemed to be some sort of corporate cover-up involving these latches," Grassini said.

Chrysler's Tyrrell said there was no cover-up and if the case had been tried, jurors would have learned Sheridan was not an engineer.

"Rather, he held a marketing position," Tyrrell said. "He never designed a liftgate latch and he never tested a latch."

Chrysler demoted Sheridan for poor job performance before firing him, Tyrrell said, and that further impugns his testimony.

That, however, contradicts Chrysler's performance evaluations of Sheridan obtained by The Detroit News. As recently as October 1994 -- two months before the automaker canned him -- various company brass wrote:

* "Paul does a thorough, detailed, organized and tireless job. He became an active promoter of advancing safety in the minivan program, only slowing when the reality of the interest from management became apparent to him."
* "Paul (Sheridan) did a good job as Chairman of the Minivan Safety Leadership team."
* "He is extremely knowledgeable and may very well be one of the best all around technical persons on staff."
* "Overall, I think Paul has done an excellent job."

What Sheridan said

Former Chrysler employee Paul Sheridan was fired in December 1994 for allegedly disseminating secret crash-test data on the 1996 minivan. He later appeared on 20/20 and said the automaker knew its minivan latches weren't strong enough to secure the rear liftgate in even low-speed accidents.

The law

Three years ago tomorrow, Sheridan sued Chrysler and three of its employees alleging they violated his rights under whistleblowers' protection laws. Those laws offer protection from companies that lash out against staffers who uncover wrongdoings. Chrysler, however, has argued Sheridan was fired for defensible reasons.

Who is Paul V. Sheridan?

The former employee at the center of high-stakes litigation involving Chrysler's minivan rear liftgate latches worked for two of the Big Three automakers since the early '80s.

Employment: Worked from 1981-84 for Ford Motor Co., including product and powertrain planning. From 1984-94, his duties at Chrysler Corp included engineering planning, helping arrange a

deal to equip Chrysler trucks with Cummins diesel engines and working on the minivan platform team.

Status: Seeking full-time employment. Chrysler fired him after finding phone records traced to a reporter for the trade weekly Automotive News. The automaker later sued him for disclosing company secrets involving minivan crash tests and comments about minivan latches on TV.

What's next

This week Chrysler settled a minivan latch case in Los Angeles before Sheridan was set to testify. It faces at least six more latch cases in next four months. Lawsuits between Sheridan and Chrysler are scheduled to go to trial in June.

Copyright 1998, The Detroit News

Comments?

TAB 2

EMPLOYEE NEWS DAILY

Thursday, March 19, 1998

Top Story

Chrysler is seeking $82 million from former employee Paul Sheridan, who was dismissed by the company for releasing confidential engineering information to the news media. Sheridan has testified against Chrysler in lawsuits involving the liftgate latch design on older-model Chrysler minivans. The $82 million represents the estimated loss in sales and potential advertising costs that resulted from an October 1995 interview with Sheridan that aired on the television program "20/20," during which he criticized Chrysler products.

Chrysler News

Bill O'Brien, Chrysler Vice President, General Counsel and Secretary, was honored last night in Chicago with the Minority Corporate Counsel Association's (MCCA) Diversity 2000 Award for his exemplary efforts in promoting diversity within Chrysler's legal department and with firms that supply legal services to Chrysler. The MCCA is a national, nonprofit organization created to promote the advancement of minority attorneys in corporate law departments.

The Jeep® Wrangler is the best value for a sport-utility vehicle under $25,000, according to the research firm IntelliChoice. The firm tracks the average cost of owning a new vehicle and says that these costs may be down for the first time in a decade. A 1998 car costs an average of $37,322 to own over five years, according to IntelliChoice. That cost includes depreciation, fuel, financing, maintenance, repairs, fuel and state fees. The estimate, while even with last year, was based on gas at $1.22 per gallon. Fuel prices since have fallen to less than $1 per gallon in many states. IntelliChoice President Peter Levy credits higher-quality cars for the drop in costs. "Repairs continue to be a smaller and smaller portion of expected costs," he said. (*Associated Press*)

Chrysler today celebrates its 1-millionth Neon produced at Belvidere (Ill.) Assembly Plant. Company and city officials will present owners of the Neon with keys and gifts from the plant. The plant produces Dodge and Plymouth Neon models and Chrysler Neon models for international markets.

In Today's *Chrysler Times*

The *Times* interviews Tom Pappert, the Vice President who guided Chrysler sales and service for many years. Pappert, who is retiring March 31,

Chrysler seeks $82 million from ex-employee

By David Lawder

DETROIT, March 19 (Reuters) - Chrysler Corp. <C.N> is seeking $82 million from a fired employee-turned-whistle blower who testified about the controversial rear-door latches in the company's older model minivans, lawyers involved in the lawsuit said Thursday.

The estimate of damages in the 3-year-old case in Oakland County Circuit Court surfaced this week in a just-settled Los Angeles case involving the minivan latches.

Chrysler alleges that an October 1995 interview of ex-product planner Paul Sheridan on ABC-TV's "20/20" news program cost the company an undetermined amount of damages.

On the broadcast, Sheridan said the company knew the latches on its 1984-95 minivans were not strong enough to keep the rear door from popping open in slow-speed, rear-end crashes, allowing unbelted passengers to be thrown out.

In a deposition last year, a Chrysler official estimated that Sheridan's statements cost the company $82 million -- including lost sales of minivans and an estimate of costs for a never-aired television advertising campaign refuting Sheridan's allegations.

The automaker in March 1995 agreed to replace latches on some 4.5 million 1984-1995 model minivans, but has steadfastly maintained the old latches contained no defects. The 1996 vans used a different latch design.

Chrysler attorney Steven Hantler said the company's main objective in the lawsuit is for Sheridan to abide by agreements he signed as a Chrysler employee not to disclose confidential and proprietary information.

"We have not come to rest on what we'll ask a jury for, maybe more or maybe less," Hantler said.

Chrysler continues to battle latch-related lawsuits, some of which include testimony from Sheridan.

The No. 3 Detroit automaker is appealing a $262.5 million South Carolina jury verdict in a latch case involving the death of a 6-year-old boy who was thrown from a minivan in a crash. The award is the largest jury verdict ever against an automaker in a product liability case.

The $82 million lawsuit is the latest in a continuing series of legal squabbles between Chrysler and Sheridan, who was fired in December 1994 for allegedly leaking confidential crash test data on the company's then-forthcoming 1996 minivan to an outside party.

The data, which claimed the vans had failed a government crash test, was later given to industry trade journal Automotive News, which published it.

Sheridan sued Chrysler in 1994, claiming the automaker owed him an undetermined amount of damages for wrongfully firing him, defaming him and damaging his reputation.

In that case, which is expected to go to trial this summer, Sheridan also claimed Chrysler rejected his proposals that the company use a stronger latch design and stronger seat frames in the new minivan design.

Sheridan's attorney, Courtney Morgan, said the latest lawsuit is aimed at intimidating the company's employees into keeping quiet about potential safety problems.

"It's clearly designed to have a chilling effect," Morgan said. "They're doing this as publicly as they can to make the message real clear to employees that this is what happens to people like Paul Sheridan."

22:12 03-19-98

Copyright 1998 Reuters Limited. All rights reserved. Republication or redistribution of Reuters content, including by framing or similiar means, is expressly prohibited without the prior written consent of Reuters. Reuters shall not be liable for any errors or delays in the content, or for any actions taken in reliance thereon. All active hyperlinks have been inserted by AOL.

TAB 3

Next Story
Return to the section index
Return to The Detroit News Home Page

August 4, 1996 BUSINESS

Door latch deal not as open, shut as thought

By Richard Willing
Chrysler Corp. continues to insist the rear door latches on its popular 1984-95 minivans are safe.

It is replacing them, the company says, to allay doubts raised by misleading reports in newspapers and on television.

But research done by the National Highway Traffic Safety Administration and contained in NHTSA files paints a different picture.

The latches, NHTSA determined, were significantly weaker than competitors' latches, more likely to open during a side-impact crash and to result in the ejection of rear-seat passengers who have mostly been children.

In November 1994, an NHTSA engineering analysis concluded that the "latch failure is a safety defect that involves children."

Four months later, Chrysler agreed to the replacement campaign, and NHTSA agreed not to enter a defect finding or to recall the vehicles.

"A deal was cut that allows a replacement campaign to proceed at a snail's pace," says safety consultant Ralph Hoar, Chrysler's chief critic in the matter.

"It was cut from a rigged deck Chrysler provided."

Copyright 1996, The Detroit News

Comments? Criticism? Story ideas? Talk to us.
Check Net Mail for comments and replies.

EA94-005 CHRYSLER MINIVAN LIFTGATE LATCH FAILURE

INVESTIGATION REVIEW

COPY OF MATERIALS
SHOWN TO CHRYSLER OFFICIALS,
NOVEMBER 17, 1994

EA94-005 CHRYSLER MINIVAN LIFTGATE LATCH FAILURE

DOOR LATCH SPECIFICATIONS

- **FMVSS No. 206 (SIDE DOORS) REQUIRES: (1) PRIMARY AND SECONDARY LATCH POSITIONS (2) NON-SEPARATION UNDER TRANSVERSE LOAD OF 2000 LBS. ON PRIMARY AND 1000 LBS. ON SECONDARY (3) NON-SEPARATION UNDER LONGITUDINAL LOAD OF 2500 LBS. ON PRIMARY AND 1000 LBS. ON SECONDARY. NO REQUIREMENT FOR LIFTGATE LATCH.**

- **CHRYSLER SPECIFICATION FOR REAR HATCH: (1) ONLY ONE LATCH POSITION (2) TRANSVERSE DIRECTION- 750 LBS. (3) NO REQUIREMENTS FOR THE LONGITUDINAL DIRECTION.**

- **FORD AEROSTAR AND GM APV SPECIFICATIONS: (1) PRIMARY AND SECONDARY LATCH POSITIONS (2) NON-SEPARATION UNDER LOADS THAT EQUAL OR EXCEED STANDARD 206 REQUIREMENTS FOR BOTH THE LATERAL AND LONGITUDINAL DIRECTIONS. THE FORD LATCH IS ENCLOSED IN A METAL CASE, AND THE APV INCORPORATES TWO LATCHES ONE ON EACH SIDE OF THE LIFTGATE.**

- **MOST OTHER PEER MINIVANS AS WELL AS STATION WAGONS INCORPORATE PRIMARY AND SECONDARY LATCH POSITIONS.**

EA94-005 CHRYSLER MINIVAN LIFTGATE LATCH FAILURE

TESTING (STATIC)

- ODI STATIC TESTING OF CHRYSLER AND PEER MINIVANS (FMVSS 206)
  - CHRYSLER MINIVANS, FORD AEROSTAR, CHEVROLET LUMINA APV, TOYOTA PREVIA MITSUBISHI EXPO, VOLKSWAGEN EURO VAN, MAZDA MPV, NISSAN QUEST, AND MERCURY VILLAGER WERE ALL TESTED AGAINST FMVSS No. 206.
  - PRE 1989 CHRYSLER MINIVANS HAVE NO LONGITUDINAL RETENTION CAPABILITY (NO UPSET HEAD ON STRIKER).
  - ONLY CHRYSLER MINIVAN LATCHES HAD FAILURE LOADS BELOW THE FMVSS 206 REQUIREMENT FOR THE TRANSVERSE DIRECTION (A MEAN OF 1300 LBS., 700 LBS BELOW THE 206 REQUIREMENT). THE MODIFIED LATCH FOR 1995 MODELS PASSED THE REQUIREMENT IN THE TRANSVERSE DIRECTION (2202 LBS).
  - MAZDA MPV LATCHES HAD FAILURE LOADS BELOW THE FMVSS 206 REQUIREMENT FOR THE LONGITUDINAL DIRECTION (A MEAN OF 1885 LBS., 615 LBS. BELOW THE 206 REQUIREMENT). TOYOTA PREVIA MARGINALLY FAILED AT 2437 LBS.

EA94-005 CHRYSLER MINIVAN LIFTGATE LATCH FAILURE

TESTING (STATIC)

- STATIC TESTING (MODIFIED LATERAL FMVSS 206)
  - GOAL WAS TO DUPLICATE THE FORK BOLT-DETENT LEVER BYPASS FAILURE SEEN IN THE FIELD
  - LATCH WAS TESTED AT ANGLES BETWEEN +90 AND -90 DEGREES.
  - THE 1991-1993 CHRYSLER MINIVAN WAS THE WORST PERFORMER IN ALL BUT THE -90 DEGREES DIRECTION AMONG ALL THE LATCHES TESTED. THIS DIRECTION IS SIMILAR TO A RIGHT-SIDE IMPACT TO THE VEHICLE.
  - THE DAMAGE PATTERN SEEN IN THE REAL WORLD WAS DUPLICATED IN +90 DEGREES DIRECTION. THE FORK BOLT AND DETENT LEVER BYPASSED EACH OTHER AND THE RESTRICTOR SLIPPED BEFORE ANY SIGNIFICANT BENDING HAD OCCURRED.
  - CHRYSLER'S TEST RESULTS COINCIDE WITH ODI'S TEST RESULTS.

EA94-005 CHRYSLER MINIVAN LIFTGATE LATCH FAILURE

TESTING (DYNAMIC, LEFT REAR QUARTER PANEL, MOVING DEFORMABLE BARRIER, MDB)

TEST NO.	MODEL	IMPACT SPEED	IMPACT DIRECTION	IMPACTING OBJECT	HATCH OPENED	EJECTION	REAR SEAT
1	'87 CARAVAN	33.6 MPH	26.4 DEG. FORWARD	3600 lb MDB	YES	2 DUMMIES	BENT
2	'91 CARAVAN	30.2 MPH	26.4 DEG. FORWARD	3600 lb MDB	NO	NO EJECTIONS	BENT
3	'91 CARAVAN	31.1 MPH	15 DEG. REARWARD	3600 lb MDB	YES	1 DUMMY	BENT
4	'91 AEROSTAR	31.1 MPH	15 DEG. REARWARD	3600 lb MDB	NO	NO EJECTIONS	OK
5	'91 MAZDA MPV	31.2 MPH	15 DEG. REARWARD	3600 lb MDB	NO	NO EJECTIONS	OK
6	'95 LATCH	31.1 MPH	15 DEG. REARWARD	3600 lb MDB	NO	NO EJECTIONS	BENT

EA94-005 CHRYSLER MINIVAN LIFTGATE LATCH FAILURE

CONCLUSIONS

- ANNECTODAL CASES
  - AT LOW AND MODERATE IMPACT SPEEDS, LIFTGATE OPENS AND OCCUPANTS ARE EJECTED.
  - LIFTGATE LATCHES EXHIBIT A COMMON FAILURE MODE (FORK BOLT-DETENT LEVER BYPASS).

- FARS DATA
  - CHRYSLER EJECTION RATE FOR KNOWN EJECTION PATHS IS TWICE THAT OF ALL OTHER MINIVANS.
  - 75% OF EJECTIONS ARE CODED UNDER UNKNOWN EJECTION PATHS. ANALYSIS OF THESE UNKNOWN CASES INDICATES THAT MANY MAY BE LIFTGATE FATAL EJECTIONS.

- NASS DATA
  - LIFTGATES OPEN DURING LOW AND MODERATE IMPACT SEVERITY.
  - LIFTGATE LATCH FAILURE ACCOUNTS FOR THE MAJORITY OF THE FAILURE MODES IN CHRYSLER MINIVANS.
  - CRASH SEVERITY IS LESS ON CHRYSLER VEHICLES.

EA94-005 CHRYSLER MINIVAN LIFTGATE LATCH FAILURE

CONCLUSIONS (CONT.)

- **STATIC COMPONENT TESTS**
  - **CHRYSLER'S DESIGN CRITERIA FOR THE LIFTGATE LATCH ARE LOWER THAN PEER AND FMVSS 206 STANDARDS**
  - **ONLY CHRYSLER MINIVAN LATCHES FAILED THE FMVSS 206 REQUIREMENT IN THE TRANSVERSE DIRECTION.**

- **DYNAMIC TESTS**
  - **AT A MODERATE SPEED IMPACT (30 MPH), CHRYSLER MINIVANS RESULT IN LIFTGATE LATCH FAILURE AND OCCUPANT EJECTIONS.**
  - **UNDER THE SAME TEST CONDITIONS, PEER VEHICLES' LIFTGATES REMAIMED CLOSED.**

- **LATCH DESIGN**
  - **CHRYSLER HAS BEEN MODIFYING THE LATCH/STIKER MECHANISM SINCE JANUARY OF 1988.**
  - **THE LATEST MODIFICATION IMPROVES THE STRENGTH OF THE LATCH BY 50% AND IS CURRENTLY BEING USED IS 1995 MODEL YEAR VEHICLES. IT COULD ALSO BE USED IN 1991 THROUGH 1994 MODEL YEAR VEHICLES.**
  - **THE INCREASED STRENGTH IN THE 1995 LATCH WAS DEMONSTRATED IN BOTH COMPONENT AND CRASH TESTS.**

- **THE LATCH FAILURE IS A SAFETY DEFECT THAT INVOLVES CHILDREN.**

TAB 4

BUSINESS
Chrysler to replace latches on more than 4 million vans
Bryan Gruley and David Sedgwick

03/28/1995
The Detroit News
2DOT
Page E1
(Copyright 1995)

The Detroit News

Chrysler Corp., facing a festering dilemma over the safety of its best-selling minivans, can thank federal safety regulators for helping it find a way out.

The automaker's decision to replace allegedly defective rear-door latches on more than 4 million minivans resulted from months of fierce debate inside the company, and top executives' reluctant admission that the automaker had more to lose than gain by fighting federal safety regulators.

But what cinched the deal announced Monday was the government's acceptance that **Chrysler** would conduct a "service campaign" rather than a "safety recall."

A recall would have forced **Chrysler** to admit to a safety defect, which would have hurt its image with customers and hamstrung its defense of the minivans against lawsuits.

Critics say the minivans' rear lift gates pop open in crashes, allowing passengers to be ejected. The National Highway Traffic Safety Administration (NHTSA) has reports linking ejections to 28 deaths.

Chrysler , which says the minivans are safe, now can boast of serving customers with a program that will cost only $100 million to $200 million, small change for a company with $8.4 billion in cash. **Chrysler** will replace the rear-door latches on 1984-94 minivans with slightly stronger 1995 latches at no cost to owners.

The campaign, to be touted in television and print ads beginning today, could bring crowds of customers into dealerships just as **Chrysler** begins to sell its newly styled 1996 minivans.

Arthur C. "Bud" Liebler, **Chrysler** 's vice-president of marketing and communications, said the company does not believe the old latches are defective as critics allege.

But escalating media coverage of the federal safety investigation and several recent minivan crashes have prompted "growing concern" among customers, he said.

"We just can't let this go on any longer," Liebler said. "We're taking action we believe will give (customers) peace of mind."

Chrysler will send letters notifying 3.9 million minivan owners in the United States and 600,000 in Canada of the service campaign. A follow-up letter will tell when replacement parts are

available. And owners who bring minivans to dealers for any reason will be asked if they want the latches replaced.

NHTSA has been investigating the minivans for 18 months. **Chrysler** proposed replacing the latches a week and a half ago _ but insisted it would not say the vehicles are in any way defective.

"That was key," one **Chrysler** official said.

NHTSA Administrator Ricardo Martinez signed off on the campaign early Monday, faxing a letter to **Chrysler** Chairman Robert J. Eaton that praised the company for "safety leadership."

Martinez was not directly involved in the negotiations, but spoke with Eaton about NHTSA's investigatory process in the case at least twice in recent weeks, said Philip Recht, the agency's top lawyer.

Some minivan owners and safety advocates criticized the agreement as inadequate. Service campaigns usually don't get as much consumer response as recalls, which explicitly raise safety concerns.

"The only way to prevent future loss of life is to do a recall so people realize it's a safety problem," said Nancy Hartshorne of Mt. Pleasant, whose two young children died after they were flung from a **Chrysler** minivan in 1992.

Ralph Hoar, an Arlington, Va., consultant who has pressed for a recall, said, "I don't know how they convince people to bring in their minivans . . . all the while saying there's nothing wrong with them."

But **Chrysler** 's Liebler said the company expects to reach "more people than NHTSA normally would." The agency will keep its investigation open to monitor the response, Recht said.

NHTSA began investigating the minivans in October 1993.

By last fall, some **Chrysler** executives were quietly arguing that the company should put the controversy behind it. While **Chrysler** President Robert A. Lutz and others argued for resisting anything that resembled a recall, a camp led by Liebler backed remedial steps.

Chrysler grew increasingly frustrated with NHTSA's apparent refusal to agree that crash statistics showed the vans were safer than virtually any other vehicle. Eaton vented that frustration and foreshadowed Monday's decision _ in a recent speech in Detroit.

After blasting lawyers who sue manufacturers as "parasites" who feed off the regulatory process, Eaton said: "The safest thing to do whenever the government . . . suggests a voluntary recall is simply to comply _ whether there is any justification for it or not."

Increasingly, **Chrysler** has gotten hammered in the media. The television news program Inside Edition aired two critical stories, and 20/20 has been preparing a story to air soon.

"It does no good for us to complain about unfairness, questionable sources, accuracy or data," Liebler said. "Such coverage . . . causes tremendous concern for our family of minivan owners."

Display as: Full Article

Return to Headlines

Chrysler Minivan Liftgate Latch
Press Conference
Monday, March 27, 1995

Chris Theodore Q & A Responses

Question :

"What are you replacing them with, and how are you fixing them?"

Answer :

"Excuse me. The latches we'll be replacing them with are the 1995 model year latches, as part of our continuous improvement program on the whole product; we're continuously trying to improve the vehicle. So we've been strengthening our latches over the years, just as we improve our air bag systems and everything else. So the 95 latch we will be putting on are 1991, excuse me, 1990 through 1994 model minivans, and something similar to it on prior model years."

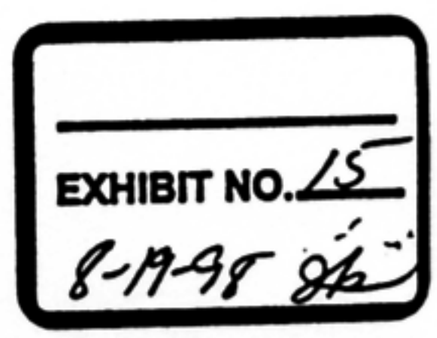

Chrysler Minivan Liftgate Latch
Press Conference
Monday, March 27, 1995

Chris Theodore Q & A Responses

Question :

"Could you tell me if the new latch is going to be a double stage latch, or simply a stronger latch?"

Answer :

"It's a single latch; it does not have a secondary. Nor is there a need for a secondary in our mind because a secondary is replicated in our minivan by having a liftgate ajar light and a warning chime."

Chrysler Minivan Liftgate Latch
Press Conference
Monday, March 27, 1995

Chris Theodore Q & A Responses

Question :

"What are the mechanical changes in this latch that make it better; qualitatively better than the old one?"

Answer :

"Well, maybe I should show them to you later. It's just under extreme deformation, we limit the amount of deformation that can go on in the latch, and it does make it a little stronger. I can show you the details afterwards."

Chrysler Minivan Liftgate Latch
Press Conference
Monday, March 27, 1995

Chris Theodore Q & A Responses

Question :

"Can you talk about much greater crash force this new latch can withstand compared to the previous latches? I mean, is it 50% greater or something like that?"

Answer :

"No. You're really into an esoteric issue. I think Dale (Dawkins) and I would love to regale you all with all the intricacies of latch. First of all, everyone ties into latch, but it's the entire hatch and the body structure and everything else. We can spend a couple of hours going through it. The strength of the latch is increased but you have to consider the entire system and that becomes a very, very complicated discussion."

"Let me continue . . . Again, if you look at the data that Bud (Liebler) presented, clearly it's not happening there in the real world. So the amount of incremental improvement that you get as far as hatch openings is concerned; it's probably unmeasurable, but it's directionally correct and that's why we're taking that action."

Article View

Article 1 of 1

Chrysler Asserts Pact With Regulators To Fix Minivan Latches Isn't Binding

By Bryan Gruley

11/30/95
The Wall Street Journal
Page A4
(Copyright (c) 1995, Dow Jones & Company, Inc.)

WASHINGTON -- Chrysler Corp. told a federal court the auto maker has no legally binding agreement with safety regulators to fix rear-door latches on more than four million minivans, and the company is "free to discontinue" the repair program at any time.

The statements in a 27-page brief filed in San Francisco appear to conflict with Chrysler's public vow to replace the latches on its 1994-95 minivans at no charge to owners. The commitment prompted the National Highway Traffic Safety Administration last month to close its investigation of potential safety defects in the latches.

But now Chrysler is trying to persuade a federal judge to approve a proposed settlement of seven class-action lawsuits involving the same issue. The company's legal brief attempts to rebut opponents who want the settlement rejected because, they contend, it doesn't offer minivan owners anything more than what Chrysler already has agreed to.

Chrysler's brief says opponents are mistaken because "there was no binding and written agreement with NHTSA." Further, the brief says, NHTSA has "no regulatory authority" over the latch-replacement campaign and Chrysler is "free to discontinue its service action at any time."

Chrysler says those arguments are technically correct but the company has no intention of abandoning the repair campaign. Lewis Goldfarb, Chrysler's assistant general counsel, said, "The commitment to NHTSA is a promise, while the [class-action] settlement is a contract." Mr. Goldfarb said the settlement, if approved, would make Chrysler's commitment to NHTSA legally binding.

But critics say the company is playing word games to gain approval of the settlement, which would shield it from lawsuits under which owners could demand that their minivans be replaced or purchased by Chrysler.

"If what Chrysler says is true, they're thumbing their nose at the regulatory agency and sending a signal that any car company can cut a deal [with regulators] and renege on it," said Clarence Ditlow, director of the Center for Auto Safety, a Washington consumer group that is opposing the settlement in court.

NHTSA investigated whether the door latches were prone to fail in crashes, allowing passengers to be ejected. On March 27, Chrysler told the agency it would replace the latches. Last month, the agency formally closed its investigation, amid criticism that regulators had abdicated their responsibility to determine whether the vans posed a safety hazard.

Separately, Chrysler agreed to settle class-action suits alleging the door latches are defective. Under the settlement, Chrysler would do what it has told NHTSA it would do. In addition, the company agreed to spend at least $14 million to notify minivan owners of the campaign if at least 60% don't

bring minivans in for new latches within 18 months.

Lawyers for the class-action plaintiffs would be paid $5 million in fees. The settlement also would release Chrysler from claims that could be made under state consumer-protection laws.

The Center for Auto Safety and a handful of minivan owners have urged the court to reject the settlement because it is essentially the same as Chrysler's commitment to NHTSA.

Barry McCahill, a NHTSA spokesman, said the agency believes it has an agreement with Chrysler, "and any effort to slip on that will not be tolerated." Among other things, NHTSA could reopen its investigation if Chrysler failed to fulfill its vow.

Oral arguments in the class-action case are scheduled for today.

Chrysler's brief also raises the possibility that delay in approval of the settlement could bring the repair campaign to a halt, if the court insists on considering whether the replacement latches are adequate. Chrysler, in its brief, argues that NHTSA's endorsement of the replacement parts is sufficient.

Return to Headlines

Copyright © 1998 Dow Jones & Company, Inc. All Rights Reserved.

TAB 5

CHRYSLER CORPORATION

Theodor R Cunningham
Executive Vice President - Sales and Marketing
General Manager - Minivan Operations

Dear

There has been recent and highly visible media coverage questioning the safety of liftgate latches on 1984 - 1994 Chrysler, Plymouth and Dodge minivans. This coverage is emotional in nature, and may have raised concern among some of the four million owners of Chrysler, Plymouth and Dodge minivans. Peace of mind among minivan owners is very important to Chrysler, so we are writing to explain our views and the actions we intend to take.

Chrysler Corporation firmly stands behind the quality and safety of our minivans, including the liftgate latches. There has been no formal determination that a safety defect exists with minivan latches. However, to help ensure peace of mind that your minivan is safe, Chrysler has decided to provide a stronger latch. We will replace your minivan's liftgate latch with a stronger component at no charge to you.

Because new latches must be tooled and fabricated to fit your minivan, it will take some time to have a supply of new latches available. During the next several months, we will notify you when the proper parts are on hand at dealerships to perform this service action. All you need do when you receive the notice is to telephone your dealer to schedule an appointment. Your dealer will schedule you for the earliest possible appointment as soon as parts availability permits. For more information regarding minivan liftgate latches and anticipated parts availability, please call us toll-free at 1-800-MINIVAN (646-4826).

We believe, and the National Highway Traffic Safety Administration (NHTSA) agrees, that the single most important safety action you can take is to ensure that all occupants are wearing seat belts properly at all times. And, of course, never allow anyone to occupy the cargo area. Also, please ensure that any removable seat has been securely reattached before the vehicle is driven.

NHTSA has been conducting an investigation of the latches on these vehicles. If you have any concerns regarding this service action, you may call the NHTSA Toll Free Safety Hotline at 1-800-424-9393.

Chrysler Corporation has a history of safety leadership. We take it very seriously. We at Chrysler Corporation want you to be safe--and certain.

Sincerely,

Chrysler Corporation
P.O. Box 3118
Bloomfield Hills, MI 48302-3118

840787222

Süddeutsche Zeitung
"Cars and Traffic"
Saturday, July 25, 1998

The allegedly weak door latch on the Voyager leaves Chrysler with explaining to do

Replacing the part is "not relevant for us in Europe"

Tailgate opens in side collisions/Controversial part was apparently only used in the U.S.

Embarrassed silence prevails at the German branch of Chrysler, the third largest U.S. auto manufacturer. The company is being pilloried because of possible safety defects in the European edition of its Voyager minivan. At least, that's how it looks to Ralph Hoar, safety consultant from Arlington, Virginia, who specializes in automotive engineering. He is trying to prove that Chrysler is treating European Voyager owners like second-class customers.

At least 37 deaths have resulted in the U.S. when Voyager tailgates opened on (side) impact during accidents. Passengers were ejected from the third row of seats in the minivan through the open tailgate. After these deaths, Chrysler installed new tailgate latches for its approximately 4.5 million Voyager customers in North America.

For the approximately 200,000 European customers who drive Voyagers which are '95 and earlier models, there has been no recall campaign from Chrysler up to this point. Safety-conscious Ralph Hoar supposes that they are driving around just like before with the old, less securely designed tailgate latch.

In order to confirm his suspicions, Hoar recently had the tailgate latch removed from a 1991 and a 1994 Voyager in Baden-Württemberg. This revealed that these latches were the old version of the component. Hoar had both latches sent to the U.S. as evidence. New latches were installed on both vehicles. One latch was sent from the U.S. and the other was a replacement part purchased for DM 118.47 at a German Chrysler dealership.

During the early stages of the latch exchange, Chrysler USA explained that there was a recall action in Europe and that "thousands of latches" had already been replaced. According to Chrysler Deutschland at first, however, "replacing the part is not relevant for us in Europe." Concerning the contradictory statements from Chrysler USA and Chrysler Deutschland, and the results of the latch exchange mentioned, Andrea Leitner, press representative for Chrysler Deutschland, simply said, "We have no comment on that."

AXEL WOLF

RALPH HOAR & ASSOCIATES LLC

1001 North Highland Street, Suite 300, Arlington, Virginia 22201
Phone: 703-841-8384 *Facsimile*: 703-841-8390
E-mail: rha@safetyforum.com
Website: http://www.safetyforum.com

FOR IMMEDIATE RELEASE
TUESDAY, AUGUST 11, 1998

CONTACT: RALPH HOAR
703-841-8384
www.safetyforum.com

SAFETY CONSULTANT OFFERS DM1,000 FOR COPY OF CHRYSLER'S EUROPEAN MINIVAN LATCH LETTER

Auto safety consultant Ralph Hoar is offering 1,000 Deutschmarks for a copy of the minivan latch warning letter that Chrysler claims it sent to 200,000 European Chrysler minivan owners. Hoar has a safety consulting firm in Arlington, Virginia. He has been a long-time critic of Chrysler's minivan rear liftgate latches, and of Chrysler's efforts to minimize the hazards associated with the defective latches.

Last month, Hoar announced that Chrysler had "failed to tell European van owners of the faulty latches" and had "not offered to replace defective latches on the rear doors of minivans it sold overseas as it has in the U.S."

Chrysler immediately issued a statement saying, "Nothing could be further from the truth." Chrysler claimed that it "did notify distributors, and even notified customers directly in the two countries with the most minivan sales – Germany and France." The company claimed "we followed the same formula around the world." The company accused Hoar of "spreading false claims."

"Chrysler has distorted the truth about its defective minivan latches since the controversy began. It's unlikely to change now," Hoar said. "It will be interesting to see which attitude toward safety will prevail when Chrysler and Mercedes join forces. Chrysler could learn a few things from its new partner," Hoar added. He noted that Mercedes spent enormous sums of money to redesign, recall and change the entire suspension in its new "A" car when it proved prone to rollover. "We've urged Chrysler to stop treating its European customers like second class citizens. Chrysler should warn Europeans of the hazard that the latches pose and offer to replace latches on European vans at no charge – just as they've done in the U.S. and Canada – nothing more, nothing less," Hoar said.

Chrysler's statement last month claims they've already done so. "Chrysler has repeatedly refused our request and the requests of others for copies of the letters that they sent to European van owners. That's why we're offering DM1,000 to the first European Chrysler minivan owner

who provides us with a copy of a letter from Chrysler warning that the latch might fail and offering to replace the latch at no cost to the van owner. The letter must predate our July 10, 1998, announcement," Hoar said.

German journalist Axel Wolf reported on July 25, 1998, in *Suddeutsche Zeitung* that in Germany "there has been no recall campaign from Chrysler up to this point." Contrary to what Chrysler was saying in the U.S., a Chrysler Germany spokesperson told Wolf "replacing the part is not relevant for us in Europe." Concerning the contradictory statements from Chrysler USA and Chrysler Germany, Andrea Leitner, press representative for Chrysler Germany, stated, "We have no comment on that."

The letter can be sent via fax to 703-841-8390 or via mail to 1001 N. Highland St., Suite 300, Arlington, Virginia, 22201, U.S.A. For further information visit http://www.safetyforum.com

TAB 6

U.S. Department
of Transportation

**National Highway
Traffic Safety
Administration**

400 Seventh Street, S.W
Washington, D.C. , 20590

SEP 28 1995

Mr. Dale Dawkins
Director, Vehicle Compliance and Safety Affairs
Chrysler Technology Center
800 Chrysler Drive (CIMS 482-00-01)
Auburn Hills, MI 48326-2757

Dear Mr. Dawkins:

As I indicated in my letter to you dated September 25, 1995, the National Highway Traffic Safety Administration (NHTSA) was very concerned by a recent national television report which showed Chrysler's minivan hotline operators minimizing the safety implications of Chrysler's latch replacement campaign in the course of various phone calls with minivan owners.

Since sending that letter, NHTSA has obtained a copy of the question and answer script which the minivan hotline operators have been using to respond to owner inquiries. In a phone conversation on September 27, you confirmed that the script was being used by the operators.

NHTSA is very troubled by the tone and substance of the script. Like the operators shown on the television report, the script attempts to minimize, if not deny outright, the safety concerns which prompted NHTSA to open its investigation into the minivan latches. To resolve these concerns, NHTSA insisted on Chrysler's agreement to provide stronger, safer latches at no charge to all minivan owners.

Indeed, the script leads minivan owners to incorrectly believe that NHTSA found the minivan latches to contain no defect. For example, at one point, the script states that NHTSA has "made no finding of defect;" a few lines later, the script states, "there is no defect with the current latch." Perhaps most disturbingly, the script states that "[a]fter careful review and extensive cooperation with NHTSA it is clear that there is no problem with the minivan latch and no safety defect."

As Chrysler is well aware, NHTSA at no time made any finding that the minivan latches contain no defect. Rather, shortly before the point in the investigation when NHTSA would have decided whether a safety defect exists, Chrysler offered to conduct a latch replacement campaign which will provide minivan owners with a stronger, safer latch at no charge. NHTSA accepted the offer because it promised to provide minivan owners with all the safety benefits of a formal recall campaign at the earliest possible date. Under the circumstances, it was no longer necessary for NHTSA to decide whether to make a formal defect finding. NHTSA did not do so. NHTSA at no time found the latches to be safe.

NHTSA's concerns with the hotline script are not simply academic. Indeed, while it disturbs us that our position in this investigation would be distorted, we are much more disturbed by the prospect that numerous minivan owners are being led into a false sense of security about the safety of their minivan latches. This could lead them to be less concerned with buckling up and less prone to have their latches replaced.

In our most recent conversation concerning this matter, you stated that, in response to NHTSA's concerns, Chrysler would take immediate action to revise the script to eliminate the misleading portions. We look forward to working with you to assure that the revisions do not mislead the public.

In the meantime, Chrysler should communicate in the near future with its minivan owners to inform them of the replacement schedule, to clearly convey the safety concerns which underlie NHTSA's investigation, and to encourage them to have the repairs made promptly upon being notified that parts are available.

Sincerely,

Michael B. Brownlee
Associate Administrator for Safety Assurance

TAB 7

RADIO TV REPORTS

New York: 212-309-1400
Chicago: 312-541-2020
Detroit: 810-344-1177
Boston: 617-536-2232
Philadelphia: 215-567-7600
San Francisco: 415-395-9131
Miami: 305-358-3358
Washington: 301-656-4068
Los Angeles: 213-466-6124

TRANSCRIPT

FOR	CHAMBERS, STEINER, MAZUR, ORSTEIN	**STATION**	WNYW-TV
PROGRAM	A CURRENT AFFAIR	**CITY**	CHICAGO
DATE	09/20/95 06:12PM	**AUDIENCE**	
SUBJECT	CHRYSLER MINI VAN HOTLINE STORY		

JON SCOTT, ANCHOR: If you don't own a Chrysler mini van, chances are somebody you know does. They are enormously popular. But after questions arose about the safety of one of the van's key components, Chrysler promised it would take action. How's it going? Well see what you think after you watch this from our investigative reporter, Karl Idsvoog.

ANGELA WOHLDMANN, MARITZ, INC. OPERATOR: Okay sir.. Sir, do you understand that this is not a recall, that they have not found any type of defective work here?

KARL IDSVOOG, REPORTER: What this woman is talking about is one of the most popular family vehicles ever made: the Chrysler mini van. (Visual: Chrysler mini van on road) Chrysler Corporation is doing something absolutely unheard of in automotive history. It is spending millions of dollars to replace the rear door latch on it's 1984 to '95 mini vans it says is not defective. Why would you replace a part when there's nothing wrong with it?

CLARENCE DITLOW, EXECUTIVE DIRECTOR, CENTER FOR AUTO SAFETY: This is one of the most lethal defects that we've seen in auto safety history.

IDSVOOG: Clarence Ditlow (sp?) is Executive Director for the Center for Auto Safety. The Center has been analyzing mini van latch complaints for the past 5 years. (Visual: Ditlow in his office)

DITLOW: There've been at least 41 people killed in ejections from the rear. An average recall doesn't have a single death, let alone 41 deaths. Even the Ford Pinto, which people think of as one of the worst safety defects ever, only had 28 known deaths at the time the government ordered the recall in that case.

IDSVOOG: Last March, the government made a deal with Chrysler Corporation. Chrysler agreed to replace the latches and the government did not order a recall.

While Radio TV Reports endeavors to assure the accuracy of material supplied by it, it cannot be responsible for mistakes or omissions.
Material supplied by Radio TV Reports may be used for file and reference purposes only. It may not be reproduced, sold or publicly demonstrated or exhibited.

(Visual: Wohldmann at work in Maritz office) As part of what Chrysler calls, it's 'service action', it hired this St. Charles, Missouri telemarketing firm, Maritz, to set up it's toll-free mini van hotline. (Visual: Maritz, Inc. building) Maritz operators have Chrysler's scripted answers to almost every conceivable question. So when you call with a question, operators read you a carefully prepared response. (Visual: printed document of Chrysler scripted answers seen)

Chrysler says it's all to give its customers peace of mind.

CLIP OF CHRYSLER TV AD: Your concern is our concern..

IDSVOOG: But what's really going on here? With her manager laughing in the background, here's how an operator from the mini van hotline responds to a customer worried about safety. (Visual: Wohldmann on a call at work, Lou Nimnick laughs in background)

WOHLDMANN: Make sure your children are properly seated in the rear seat in the rear seat belts. My name is Angela Wohldmann, W-O-H-L-D-M-A-N-N.

IDSVOOG: Watch and listen to what happens when the caller isn't satisfied with the response and wants to talk with someone else. And by the way, the guy in the background is the top manager of the hotline, Lou Nimnick (sp?). We'll hear from him later.

WOHLDMANN: (talking to customer) I am a supervisor sir. There is nobody above me. (pause for response) Okay, well let me go try to find a supervisor for you, but I.. have to.. (call is ended)

WOHLDMANN: (looking at phone) Dick!

IDSVOOG: Keep in mind, Chrysler set up this hotline to respond to the safety concerns of it's mini vans owners. (Visual: graphic reads 1-800-MINIVAN with Chrysler logo underneath) And with some reports of accidents where the hatch opened upon impact and people flew out the back and were seriously injured or killed, owners may have good reason to be concerned. (Visual: Chrysler mini vans on road, and a damaged mini van)

But that's not what the mini van hotline operators are scripted to say. We repeatedly heard operators tell callers, there was nothing to be concerned about.

FEMALE MARITZ OPERATOR: No, there's no problem with the latch. (Visual: operators in Maritz office)

MALE MARITZ OPERATOR: Let us say, they did find no defect..

IDSVOOG: Some mini van owners told A Current Affair, when they called the hotline, they felt mislead and mistreated. (Visual:

Wohldmann walking around smiling smugly)

BRENDA WARE, HOTLINE CALLER: He called me a liar.. He made me feel like I was like, this small.. (Visual: she indicates smallness with fingers)

STUART NIXON, HOTLINE CALLER: The way she put it, it was a nuisance-type problem. And to me, that's not a nuisance; that's a potential hazard.

IDSVOOG: Another person who didn't like what he heard from the mini van hotline, was a man who used to work there.

BRIAN RANDAM: I don't think the American public were getting the straight scoop.

IDSVOOG: He's Brian Randam (sp?) and he wanted the public to know what he learned. (Visual: Brian Randam in parking lot) That's when A Current Affair got involved. We hired him to wear a hidden camera and document what he observed. He had worked on Maritz's projects for 7 weeks and his last 2 days, recorded what happens when customers called. (Visual: more Maritz operators; Bill Sissler and children in his mini van) Customers like Bill Sissler (sp?) of Winchester, Maryland, who hauls his kids everywhere in his mini van.

BILL SISSLER, PARENT: We're in it practically every day. I don't want an accident to occur like it has happened to other people.

IDSVOOG: Sissler's had no problems with the latch on his van and he wants to make sure he never does. So he called the hotline.

SISSLER: I was not very satisfied with the answer and I asked for, you know, to speak with someone else.

MALE MARITZ OPERATOR: Do you want me to hand you over to my supervisor now sir? (Visual: inside Maritz office)

IDSVOOG: Did you ever wonder what happens when you ask to speak to someone's supervisor? Well here's what happened with Bill Sissler's call. The operator tells the supervisor an upset customer wants to talk. (Visual: a supervisor is standing next to operator on phone with Sissler)

MALE OPERATOR: You want to talk to him Lou? Or do you want me to get his name and number?

MARITZ SUPERVISOR OPERATOR: Get his name and number, 'cause I'm about to go to lunch.

IDSVOOG: With one supervisor heading to lunch, our man seeks out another.

WOHLDMANN: This guy can stew for a minute..

IDSVOOG: After letting him stew, the call gets passed to Lou Nimnick. He's the guy you saw laughing before. He tells Bill Sissler there's nothing wrong with his van.

LOU NIMNICK, HEAD SUPERVISOR OF MARITZ: The latch on your vehicle is safe.

IDSVOOG: But just listen to what he says the next day..

NIMNICK: They certainly could have built a better latch, to start with. There's no question; they built a helluva van.. However if you look at it, it is the safest car (censored word) on the road, as a class, which means that, if you're gonna analyze it, even though Chrysler could have done a better job on their latches there's a (garbled word) and a few people killed that wouldn't be.. There's no question.. There's probably been.. as many as 20 or 30 or 50 people who were killed in the mini van or severely screwed up when there would have only been maybe five or so..

IDSVOOG: One thing to keep in mind: A manager of a consumer hotline is not a safety engineer. (Visual: Nimnitz and Wohldmann) So when the manager tells an employee people have died because of a problem with the latch, that's simply his opinion.. not Chrysler's.

Although the National Highway Traffic Safety Administration, NHTSA, has not officially declared the mini van latch defective, a top NHTSA official told A Current Affair just 2 weeks ago, "The bottom line is, there's a safety problem." When we told that official the mini van hotline was telling customers the government found no problems with the latch? He disagreed, telling us, "That infers we gave Chrysler a clean bill of health. That is certainly not the case."

The government's auto safety experts refused to be interviewed on camera for our story. (Visual: government building, Chrysler TV commercial) So did Chrysler executives. Chrysler told us, it would answer absolutely no questions from A Current Affair. One person who was able to get candid comments was our man on the inside. Listen to what the head of the mini van hotline said about customers' safety concerns when he wasn't reading the Chrysler script. (Visual: Lou Nimnitz in Maritz office)

NIMNICK: Why do they keep these damn, unsafe, terrible, horrible latch.. screwed up latch mini vans? If they're so concerned about their children? And I'm serious. If it's that much of a (censored word).. If it really is that big of a deal, why don't they take the damn Caravan and go and trade it in for a new Windstar or whatever..

IDSVOOG: I think it's time Chrysler took a look at the operation of it's hotline as well as it's tailgate latches.

[End]

TAB 8

A C Liebler
Vice President
Marketing and Communications

CHRYSLER CORPORATION

December 8, 1995

Mrs. Ananias
Sugar Creek Elementary School
c/o Ciskey
1303 Courtland Avenue
Normal, IL 61761

Dear Mrs. Ananias:

I am enclosing a letter to respond to your students and to try to put some perspective into the suffering they have endured over Brandon Auer's death. As you might imagine, we take great exception to the way "20/20" reported the story on the minivan latches, but that's beside the point.

Frankly, I'm a little bit surprised that you would have your students write letters like these to Chrysler. It seems like a rather maudlin and painful assignment from the students' point of view, but maybe you felt it was therapeutic to them and, if it was, then I guess it was a worthwhile exercise. I'm not sure the idea of making them afraid to get into their parents' minivans was a very good idea, though, and I'd be surprised if so many of them came up with that sentiment on their own.

I am also not sure you will want to share my letter with your students. That's your call. My intent was simply to tell them that Chrysler does care about what happens in its vehicles, and that we do care a great deal when people like Brandon Auer are injured or lose their lives. At the same time, I hope you recognize that we do everything possible to avoid such injury and loss of lives and understand the loss and pain even without a package of letters from sad and confused third graders.

Sincerely,

Bud Liebler

ACL/mlz

Marketing and Communications
Chrysler Corporation
12000 Chrysler Drive
Highland Park MI 48288-0001

CIMS 416-19-04

This transcript has not yet been checked against videotape and cannot, for that reason, be guaranteed as to accuracy of speakers and spelling. (LW)

ABC NEWS 20/20 Transcript #1543

October 27, 1995

HUGH DOWNS, ABC News: Good evening. I'm Hugh Downs.
BARBARA WALTERS, ABC News: And I'm Barbara Walters and this is 20/20.
HUGH DOWNS, ABC News: Good evening. I'm Hugh Downs.
BARBARA WALTERS, ABC News: And I'm Barbara Walters and this is 20/20.
ANNOUNCER: From ABC News, around the world and into your home, the stories that touch your life, with Hugh Downs and Barbara Walters, this is 20/20.

Tonight, an inside story— as tragic accidents continue to happen.

TIM HARTSHORNE: The back hatch opened and the children were thrown out and that killed them.

ANNOUNCER: A 20/20 investigation of Chrysler minivans and the rear latch that can fail.

ALEX BOYD: *[sp?]* I was sitting in the back seat and I had a lap belt on and I flew out the back.

ANNOUNCER: Now, you'll see it in writing, hear it from an insider.

JAMES WALKER, ABC News: How long has Chrysler known about this?

ANNOUNCER: Are your passengers safe in the back?

JAMES WALKER: Chrysler says they are fixing the latches.

BRIAN AUER: Well, not fast enough.

DONNA AUER: Not fast enough.

ANNOUNCER: James Walker's report could save the lives of the people you love— Open To Danger?.

And, the controversy that stirred up this crowd may divide your family. Whose side would you take? The student who sued her public school?

RACHEL BAUCHMAN: I can't identify with kids singing Jesus is my savior when Jesus isn't my savior.

ANNOUNCER: Or the community that united against her?

JOHN BRINTON, Choir Member: We just want to sing beautiful music.

ANNOUNCER: Should Christian music be sung in a public school choir?

JOHN STOSSEL, ABC News: Nobody else is complaining.

ERIC BAUCHMAN, Rachel's Father\: Nobody else wanted to complain.

ANNOUNCER: John Stossel with a Jewish teenager who refused to sing with the crowd and the school that turned against her— Standing Alone.

Plus, the story you've been waiting for— the new life of an extraordinary family. You met their beautiful little girls, born as one. You shared their anguished decision to separate them. Now, see what love and time can do. Plus, the Holtons reach out to another family like them. Hugh Downs with a tender saga of love, loss and remarkable spirit. An inspiring new chapter in this 20/20 classic— Divided By Love.

Those stories tonight, October 27th, 1995, after this brief message.

[Commercial break]

Open To Danger?

BARBARA WALTERS: We begin with the new and troubling headlines about one of America's most popular family vehicles, the Chrysler minivan. More than four million of them are on the road now. This week, government safety experts announced what Chrysler has denied for years and continues to deny today— that the minivan has a safety problem, a rear latch that can open in collisions, allowing passengers to be thrown out, sometimes to their deaths.

HUGH DOWNS: And this news was not a surprise to us. For the past nine months, 20/20 has been investigating complaints about these rear latches and what we discovered has raised some serious questions. As correspondent James Walker reports, why has Chrysler waited years to strengthen this latch and is the government doing enough to protect minivan passengers?

JAMES WALKER: *[voice-over]* There was Alex Boyd in North Carolina.

ALEX BOYD: I was sitting in the back seat and I had a lap belt on and I flew out the back of that door and I got stitches there and stitches up there.

JAMES WALKER: *[voice-over]* Graham Woodbrook *[sp?]* in Florida.

GRAHAM WOODBROOK: I turned around to see if everybody was okay and I didn't see the two girls and I couldn't see Heidi and the rear door was open.

JAMES WALKER: *[voice-over]* And Tim Hartshorne in Michigan.

TIM HARTSHORNE: The only thing I know for sure is that the seat belts came undone and then the back hatch opened and the children were thrown out and that killed them.

JAMES WALKER: These accidents, which involved Chrysler minivans, have something in common. When the vans were hit, even at moderate speeds, this rear door latch apparently twisted. The lift gate popped open and passengers sitting in this removable seat, some wearing seat belts, some not, were ejected out of the back.

TIM HARTSHORNE: It was being hurled from the car that caused their deaths. It was the breakage of all their bones that caused their deaths.

JAMES WALKER: *[voice-over]* Eight-year-old Michael Hartshorne and his 15-month-old sister Katherine *[sp?]* were ejected from their parents' Plymouth minivan. The accident, in Mt. Pleasant, Michigan, happened in 1992.

JEFFREY SHELL, Officer, Mt. Pleasant, Michigan Police: The eight-year-old is the one that landed next to the house in the bushes and the infant and the car

seat were thrown into this area of the yard over here.

JAMES WALKER: *[voice-over]* The Hartshornes sued Chrysler, alleging a weak latch was responsible for their children's deaths. The company settled the lawsuit out of court. Last fall, the federal government conducted these crash tests, which it made public two days ago. When a Chrysler minivan is hit at 30 miles an hour, the rear hatch opens and passengers are ejected. By March of this year, the government had received reports that 32 passengers had been killed and 76 injured in these types of accidents. Under mounting pressure and with the g's blessing, Chrysler responded.

A.C. "BUD" LIEBLER, Vice President, Chrysler Corporation: *[March 27, 1993]* Today we are announcing an unprecedented action that is going to put the issue of Chrysler minivan lift gate latches behind us.

JAMES WALKER: *[voice-over]* Chrysler insisted that the rear door latch was safe.

A.C. "BUD" LIEBLER: Now throughout this investigation, Chrysler has maintained that there is no safety defect in our minivan latches and we continue to believe that today.

JAMES WALKER: *[voice-over]* Without admitting a safety problem, the company offered to replace the rear latch on four million Plymouth, Dodge and Chrysler minivans. It was not a government ordered recall, but a voluntary service action.

COMMERCIAL: Your concern is our concern. So for your peace of mind, we will replace your 1984 through '94 lift gate latch with a stronger latch free.

JAMES WALKER: *[voice-over]* Remember, it was just this past March that Chrysler made the offer. But according to this man, Paul Sheridan, Chrysler had known for years that it had a safety problem with the latch.

[interviewing] How long has Chrysler known about this?

PAUL SHERIDAN: Well, I'm going to say Chrysler has known about this for at least the last four to five years. I became aware of it in a direct sense in 1992.

JAMES WALKER: *[voice-over]* Why should he know the inner workings of Chrysler? Because he was there, on the inside, for 10 years. For nearly two of those years, until late last year, Paul Sheridan was chairman of Chrysler's minivan safety team. When we spoke to him in March, he told us what his safety team had learned about the rear latch.

PAUL SHERIDAN: In minor accidents, the latch fails, the hatch opens and occupants are being ejected out of the back of the minivan. This causes serious injury and, unfortunately, in some cases, it has caused death.

JAMES WALKER: *[voice-over]* But despite what Sheridan said Chrysler knew, this March, the company still maintained publicly that the latches were safe. The auto maker sent out letters to minivan owners blaming emotional media coverage for the controversy and they reassured owners "there has been no formal determination that a safety defect exists". Edna Benziger, *[sp?]* from Bronxville, New York, says the letter gave her no cause for alarm.

EDNA BENZIGER: I really didn't think it was a real safety issue. I thought it was just a small part of the lock system that was defective that we would just replace. But when they told me they didn't have the parts, they didn't tell me there was an urgency, either. They said call back in three months.

JAMES WALKER: *[voice-over]* Months went by and the latches still were not available. The reason, according to Chrysler, engineering delays. Meanwhile, Chrysler had set up a telephone hot line. Operators were given this script. When asked why owners should feel safe, the operators were instructed to say, "There is no defect with the current latch. Owners can best protect themselves by using seat belts at all times." But seat belts did nine-year-old Brandon Auer. His parents, Donna and Brian, were among minivan owners who say they had no safety concerns after receiving the letter from Chrysler.

DONNA AUER: They implied there was not really a safety concern, that they were doing it just for the peace of mind of their valued customers. So we didn't think that our family was in danger.

JAMES WALKER: *[voice-over]* Just last month, more than five months after Chrysler insisted it's latch was safe, the Auers were driving their 1989 Plymouth Voyager on this Illinois road. Both of their sons, they say, were wearing seat belts— Alex in the middle seat, Brandon in the rear. A car ran a stop sign and slammed into the van, propelling it into this corn field.

BRIAN AUER: Donna yelled for me to get Brandon and she would get Alex and I turned around and looked and my gate was open and my rear seat is gone and I yelled, "Oh my god, Brandon's gone."

JAMES WALKER: *[voice-over]* Brandon was ejected. His mother found him at least 58 feet from the van. He was still buckled into his seat.

DONNA AUER: He was slumped over in his seat and I undid his seat belt and there were two people there already and we laid him down on the ground and they started CPR on him immediately.

JAMES WALKER: But it didn't do any good?

[voice-over] A corner's jury concluded Brandon was killed because he was ejected due to the failure of the van's latches. This summer in Dallas, David Evercrombie *[sp?]* says he asked his local Chrysler dealer about the new latch.

DAVID EVERCROMBIE: And I said, "When are they going to replace the latch?" and he said, "They haven't manufactured it yet and really, it's not that big a problem."

JAMES WALKER: It's safe to drive was your impression.

DAVID EVERCROMBIE: It's safe to drive, yeah, and if it wasn't, why would they let me go?

JAMES WALKER: *[voice-over]* Evercrombie set out on a long trip with his fiancee, Lynn Jones, *[sp?]* and her family. It was this past July, nearly four months after

Chrysler announced the offer to replace the latch. In the New Mexico desert, Lynn, who was driving, lost control of the van. Police say the rear struck this guard rail and the van rolled over. Five passengers who were not wearing seat belts were ejected, including Lynn's son Mark.

DAVID EVERCROMBIE: I remember just being shot straight out the back of the van. I was just immediately thrown onto the pavement and skidded about 15 feet, 20 feet.

JAMES WALKER: *[voice-over]* Lynn's sister, according to police, was ejected, too. She lost an arm. Her mother, who was also ejected, was killed. Evercrombie, his fiancee and her family are suing Chrysler.

JOAN CLAYBROOK: *[sp?]* Well I believe that this latch is unsafe. It's a threat to the public.

JAMES WALKER: *[voice-over]* Joan Claybrook is president of Public Citizen, a consumer advocacy group. She once headed the National Highway Traffic Safety Administration, NHTSA, the same agency at the Department of Transportation that permitted Chrysler to conduct a less urgent service action instead of a safety recall.

JOAN CLAYBROOK: The Department of Transportation allowed this to happen. All this delay and dilly dally and letters that deny that this is a safety hazard and hot lines that deny there's a safety problem are examples of what happens when you make the first mistake in the very beginning, which is to allow Chrysler to call the shots.

JAMES WALKER: *[voice-over]* Last month, NHTSA suddenly spoke out In an angry letter about the script operators used on the Chrysler telephone hot line, an official wrote, "NHTSA is very troubled by the tone and substance of the script. We are disturbed by the prospect that numerous minivan owners are being led into a false sense of security about the safety of their minivan latches." As far back as 1990, according to this internal company memo, Chrysler managers considered strengthening the rear door latch. The manager who wrote the memo estimated a stronger latch would cost $.25 to $.50 each. But he felt the weaker latch was not a significant problem and recommended keeping it unless mandated by the government to change it. And Paul Sheridan, who ran Chrysler's minivan safety team, says he urged Chrysler not only to develop a stronger latch, but to add a back up latch.

PAUL SHERIDAN: During early 1993, for example, I made a presentation recommending that the current latch be upgraded to what we call a dual stage latch.

JAMES WALKER: *[voice-over]* And even though every competing minivan, like this one, had a dual stage latch, Sheridan says Chrysler did not want it.

PAUL SHERIDAN: And I was told that to upgrade the latch, especially in terms of it's design philosophy, in terms of going from a single to a dual, to make that drastic a change on the latch would indict all the previous latches. You effectively are admitting to guilt. That's what I was basically told, and so it was on that basis that the safety leadership team recommendation to upgrade to a dual stage latch was rejected.

JAMES WALKER: *[voice-over]* Chrysler turned down our request for an interview. The company has stated that it spent millions of dollars on safety features, but did not think upgrading the latch would increase safety. Sheridan says that last year, Chrysler disbanded his safety team, after company officials repeatedly objected to his recommendations.

PAUL SHERIDAN: I began to recognize that anything negative associated with safety, anything negative at all was to be quieted and hushed.

JAMES WALKER: *[voice-over]* Chrysler fired Sheridan and is suing him for defamation and for allegedly disclosing confidential information. In court papers, the company claims because Sheridan is not an engineer, he was not qualified to make safety engineering suggestions or decisions. Sheridan denies Chrysler's charges and is suing the company. After all this, the question remains, is the latch safe? Just this week, the National Highway Traffic Safety Administration closed it's two-year investigation by concluding it is not safe enough.

RICARDO MARTINEZ, M.D., NHTSA Administrator: *[Wednesday]* The safety of millions of minivan owners and their families is at stake here. This latch needs to be stronger and safer.

JAMES WALKER: *[voice-over]* In a prepared statement to the press after NHTSA's announcement, Chrysler continued to insist it's minivan is safe.

A.C. "BUD" LIEBLER: Minivans as a category are among the safest vehicles on the road and Chrysler's minivans are among the safest of all minivans anywhere and we're going to stand behind the safety of these vehicles.

JAMES WALKER: *[voice-over]* But how can the government claim the latch is not safe enough and yet not order an urgent safety recall? According to Joan Claybrook, Chrysler got off easy.

JOAN CLAYBROOK: They're trying to get the best of both worlds, not admit any liability, not admit they made a mistake, not admit that there's a safety hazard, not really alert the public, but at the same time, do lots of communication to try and show that the company is concerned about the peace of mind, as they say in their letter.

JAMES WALKER: *[voice-over]* Chrysler, which has begun to install the new, stronger latches, now says it will step up it's efforts. Still, the company admits that it could take more than a year to complete the process.

[interviewing] Chrysler says they are fixing the latches.

BRIAN AUER: Well not fast enough.

DONNA AUER: Not fast enough when people are dying. If our son had stayed inside the van, there's no doubt he would have walked away from the accident just like the rest of us did. So how can they say there's not a problem?

HUGH DOWNS: James, if the government has determined that these latches are not safe enough, why

hasn't it ordered a recall?
JAMES WALKER: Well the government says that Chrysler could fight a recall in court, delaying production of the stronger latches, and that with this agreement, the stronger latches are being installed. But I must tell you that we called around to some dealerships today which did not have them.
HUGH DOWNS: Now what are the owners of these minivans and their passengers supposed to do?
JAMES WALKER: Well, first of all, if you have a '95, '96 model minivan, no problem. They've got the stronger latches. If you have an older minivan, the suggestion is this— wear seat belts at all times. Double check that rear seat to make sure it's properly installed and finally, even though the number of ejections is statistically rare, perhaps maybe you shouldn't use that last seat.
HUGH DOWNS: They may be a statistical rarity, but if it happens to you, it's 100 percent and that's rough. Thank you James.
BARBARA WALTERS: Well later in the program, the continuing saga of the Holton family, whose twin girls shared one body. But next, you've probably told your kids, don't follow the crowd. But now you'll see how tough that can be. Standing up to the crowd can be a very lonely business, as this Jewish teenager found out. John Stossel has her provocative story, after this.
[Commercial break]

Standing Alone

BARBARA WALTERS: Now a controversy that could ignite a hot debate in your house. It's about a teenage girl who stood up to the crowd, who held to her beliefs in the face of intense pressure to give in. Her parents were proud. Her school community was outraged. As John Stossel guides you through what became a delicate dilemma, ask yourself, whose side would you take? In this country, should one discordant voice be heard over the harmony of so many others?
JOHN STOSSEL: *[voice-over]* This is what the conflict is about— beautiful music that talks about god. Some people say that when this Mormon choir director asks public school kids to sing songs that mention god, it's like telling them to pray, and that's illegal. It's not surprising that this conflict has come up here. Utah is an unusual state in that most of the population is Mormon.
[on camera] In fact, many came here to Salt Lake City because they were persecuted in other parts of the country because they were different. So it's interesting that in this case, some people are saying it's the Mormons who are being intolerant.
ERIC BAUCHMAN: What you're talking about is a theological national socialism of religion in public schools. These are not neo-nazis, these are theo— nazis and they're just as dangerous as their predecessors in Germany.
JOHN STOSSEL: *[voice-over]* The people Eric Bauchman's upset about are the Mormons who dominate Utah's high schools. The controversy began a year ago, when Bauchman's 16-year-old daughter, Rachel, joined the choir at West High in Salt Lake City.
RACHEL BAUCHMAN: Well I started noticing, as soon as received our Christmas repertoire, a preponderance of Christian religious devotionals and—
JOHN STOSSEL: Like?
RACHEL BAUCHMAN: Pieces which contained lyrics such as "All believers are heaven-bound", meaning if you don't believe in Jesus, then you're not going to heaven. Things like, "Jesus is my savior, he's my king."
JOHN STOSSEL: Why is that a problem?
RACHEL BAUCHMAN: I can't identify with kids singing "Jesus is my savior" when Jesus isn't my savior.
JOHN STOSSEL: *[voice-over]* Jesus isn't her savior because Rachel is Jewish, and although she has no problem singing some Christian songs, she says she was uncomfortable singing mostly Christian music. She wanted other religions represented. She talked to her parents about it.
CHERYL BAUCHMAN, Rachel's Mother: If you're going to praise Jesus, if you're going to praise god, it doesn't matter what religion you are, then you should be able to do it, you should do it in your church, your synagogue, your mosque, a meeting hall, but not in a public school where a child is— has to sit there for an hour and a half every other day and constantly be brainwashed.
JOHN STOSSEL: *[voice-over]* The a capella choir is widely respected in Salt Lake. Rachel had to audition to get in and she was honored to be selected. She became one of the few non-Mormon members of the choir. They performed in auditoriums and churches around town.
ERIC BAUCHMAN: The first concert was held at the First Presbyterian Church. I didn't mind the fact that there were two crucifixes in the background. However, the majority of the songs that Rachel's a capella choir class sang in that first concert were Christian devotional songs.
JOHN STOSSEL: Nobody else complained.
ERIC BAUCHMAN: Nobody else wanted to complain. Rachel approached other kids and they said that they were afraid to.
JOHN STOSSEL: *[voice-over]* Few wanted to challenge Richard Torgerson, *[sp?]* the choir director. He's led the choir for 10 years and made it successful. A deeply religious man himself, many members of the choir say he's been an inspiration to them.
MAIJA-LIISA PHIPPS, Choir Member: Mr. Togerson has been a big help to me in my life. He's been there for me at every— he—
JOHN STOSSEL: How did he inspire you?
MAIJA-LIISA PHIPPS: Just through his music. He was just— he just showed you how much he loved what he was working with and he loved the music so much and he tried to get kids to show him what a spectacular experience it is.
JOHN STOSSEL: Now remember, one of America's founding principles is religious freedom. The Bill of Rights was written to make sure the government

ABC News 20/20 147 Columbus Avenue New York NY 10023 (212) 456 2020

28 March 1995

Courtney E. Morgan
Michael S. Mazur
Chambers Steiner
1490 First National Building
Detroit, MI 48226

Dear Messrs. Morgan and Mazur:

On Friday, March 24, 1995, I faxed and sent a letter to Rick Deneau at Chrysler. In the letter we asked for an interview regarding:

> "overall safety record, alleged problems with rear latch doors and injuries alleged to be caused by such problems, and issues raised by Paul Sheridan, formerly of Chrysler."

Should we need any follow-up response from you or Mr. Sheridan after the interview I am hoping we can call on you.

Sincerely,

Allan Maraynes
Senior Investigative Producer

TAB 9

Article View

THE WALL STREET JOURNAL.

Article 36 of 64

Chrysler Claims U.S. Uses ` Flawed ' Test on Minivans

02/01/95
The Wall Street Journal
Page A4
(Copyright (c) 1995, Dow Jones & Co., Inc.)

HIGHLAND PARK, Mich. -- **Chrysler** Corp. yesterday accused the federal government of using a " **flawed** " crash test that it said was specifically designed to make the rear door of the **Chrysler** minivan spring open.

The National Highway Traffic Safety Administration has been privately urging **Chrysler** to recall voluntarily more than four million minivans and replace the rear latch, according to people within the agency. NHTSA has calculated that about 25 people were killed in crashes when the rear door of a **Chrysler** minivan opened. In nearly all the deaths, the victims were ejected from the vehicle, according to NHTSA.

However, **Chrysler** maintains that its minivan is one of the safest vehicles on the road. The reason more people have been ejected from **Chrysler** minivans, the company says, is that **Chrysler** has sold more minivans than other manufacturers.

"We have told NHTSA that the [government] test is **flawed** because they devised the test specifically to cause a liftgate opening on a **Chrysler** minivan," **Chrysler** said in a statement.

NHTSA officials couldn't be reached for comment last night.

Return to Headlines

Copyright © 1998 Dow Jones & Company, Inc. All Rights Reserved.

Number of Latch/Striker Related Liftgate Openings Per 1,000 Crashes

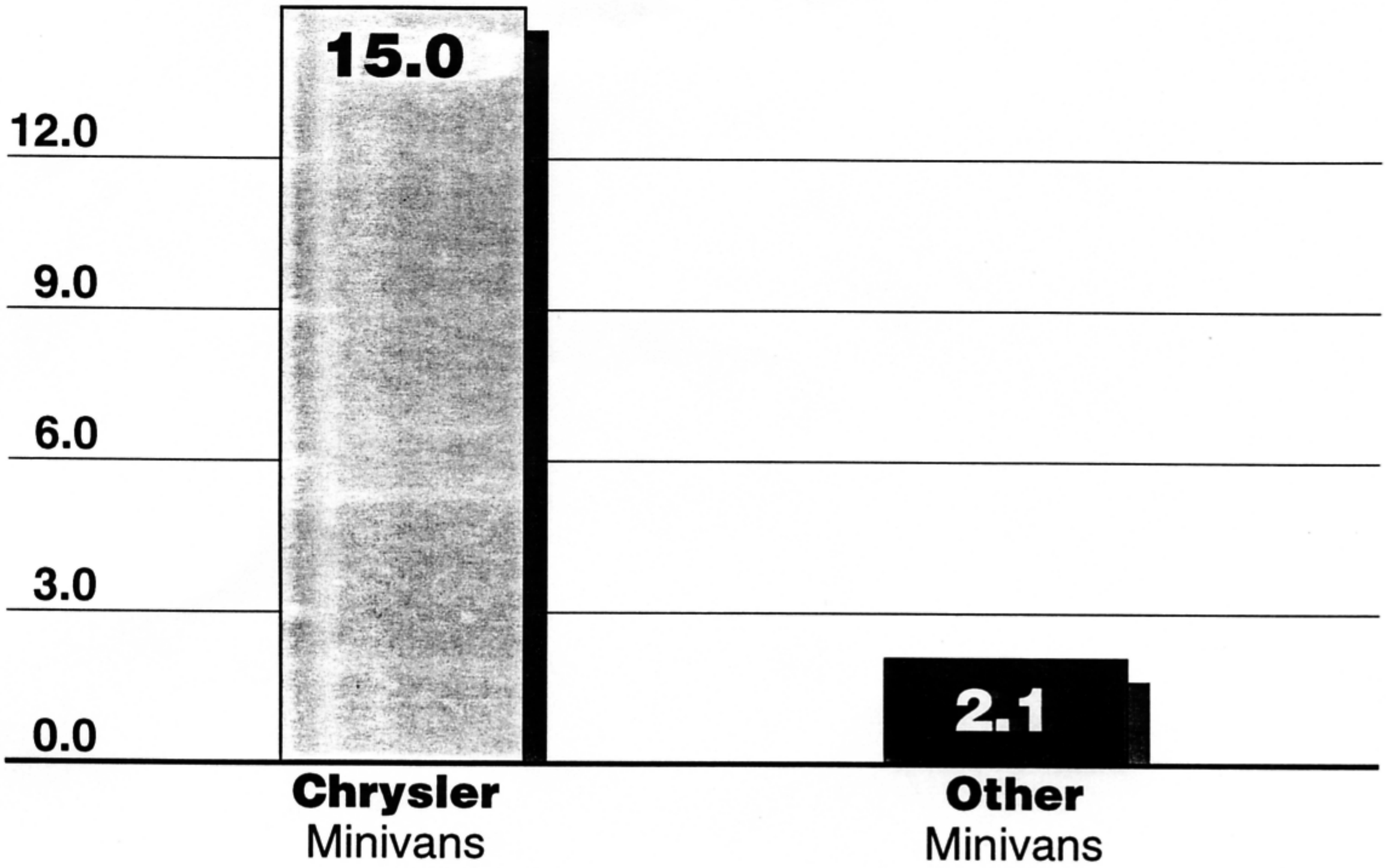

Table 29. Weighted Number of Latch/Striker Related Liftgate Openings for Minivans in Crashes: NASS; 1988-94

Vehicle Type	Total Number of Crashes	Total Crashes with Liftgate Opening from LATCH Failure Mode	Number of LATCH Related Openings per 1,000 Crashes
Chrysler Minivans	114,619	1,715	15.0
Other Minivans	151,846	323	2.1

NHTSA Concludes: "The above data demonstrate that the latch failure rates for Chrysler minivans is higher than those of other minivans. This is consistent with field data and with ODI's FARS analysis of unknown ejection paths."

Source: Table 29, Engineering Analysis EA94-005 Chrysler Minivan Liftgate Latch Investigation Engineering Analysis Technical Report 10/25/95.

7-13-1996 : DETROIT FREE PRESS

rofits; workers likely to share

conditions in the U.S. where Chrysler's sales ed," Chrysler said in its report to the SEC.

ant weakening of eco- ns in the U.S. and Cana- uption in production as or disputes could result g of third-quarter 1996

planned production."

But the automaker again raised its estimate for total 1996 U.S. auto industry sales, this time from 15.3 million to 15.5 million vehicles. Chrysler had nudged up the estimate by 200,000 units in April after better than expected first quarter results were posted.

The average vehicle sales price for the second quarter was $18,649 after rebates, $451 more than in the second quarter of 1995, Chrysler told the SEC. Gross profit per vehicle averaged $1,905, Valade said.

During the second quarter, rebates averaged $625 per vehicle, compared with $640 in the first quarter and $1,035 a year ago. They should get much higher for the rest of the year, said Jim Holden, Chrysler executive vice president for sales and marketing.

Holden also said he expects Chrysler to hold most of the market share it gained in the second quarter. Its share rose from 16.3 percent in the first quarter to 16.7 percent in the second.

2,119 minivan latch openings outlined in Chrysler documents

Engineers debated ways to fix problem

BY JANET L. FIX
Free Press Washington Staff

Liftgate latches on Chrysler's popular minivans popped open 2,119 times while being transported from factories to dealers in 1994, according to internal Chrysler documents made public Friday by a Texas judge.

A state court judge in Palestine, Texas, ordered the documents released after a lengthy hearing stemming from a suit against Chrysler on behalf of a Texas teenager who became a paraplegic after a minivan accident.

The documents detail how Chrysler for years debated ways to strengthen the latches before finally agreeing last year to replace them on 4.5 million 1984 to 1995 minivans.

And they seem to contradict some public claims by Chrysler, which continues to defend the latches as safe and effective.

Despite assertions by Chrysler Thursday that there had been only 200 latch openings in transit, notes from an Aug. 23, 1994, brainstorming session with Chrysler engineers indicate more than 2,000 openings. Between May and August 1994, engineers had reports of 2,119 latch openings in transit, the bulk of which — 1,743 — involved minivans transported by railroad.

The liftgate latches popped open repeatedly — even after minivans were driven off the delivery ramp and into a parking lot, the documents indicate. In some cases, latches popped open in transit several times.

Under possible root causes, the engineers included: "the latch itself," sabotage, drivers failing to close the door properly, and "Ford slipping driver money" — although the latter was noted to be only a rumor.

Chrysler spokesman Rick Deneau blamed the latch openings during transit on the fact that the minivans were tied down, robbing them of their normal suspension.

Deneau said Chrysler wasn't aware of thousands of openings. "The engineer who looked into the transport issue told me he recollected 150 to 180 latch openings in transit," Deneau said.

A Dec. 21, 1994, memo noted "some 220 reports of liftgate openings in shipping." But that memo conceded that it is "also likely that some instances went unreported" and not all reports had been documented. Assuming there were 300 incidences, the memo says, less than 0.2 percent of minivans transported had popped open.

Federal safety officials say more than 35 people have died after the latches popped open in crashes and the victims were ejected from the vans.

But federal safety officials did not declare the latches defective. Instead, they agreed to let Chrysler replace the latches in a controversial service campaign.

MICHIGAN STOCKS

Stock	% YTD	Last	Change
AJLn	+ 6.4	26¾	– ¾
AdcoTech	+ 23.2	8½	– ⅛
AgreeRlty	+ 24.8	18¼	+ ¼
AlldDpt	– 33.3	2⅛	– ⅛
AlliPesDn	– 27.7	4¼	
AmDentl	+227.3	2⅞	– ⅛
Amerfwd	+ 58.1	6⅛	– ⅛
AmervAs	– 18.2	25⅛	– ⅜
AmveyJ	+ 13.2	23½	– ¼
ArborDrg	– 8.3	19¼	+ ¼
Autocam	– 27.7	10⅛	– ⅜
BankWest	+ 13.6	11½	
Borders	+ 72.9	31⅛	– 1⅜
CFSB	– 5.8	38¼	– ½
CMSEner	+ 3.3	36⅝	+ ⅛
CMSGn	– 6.6	17⅝	
Cadelnd	+138.9	7⅛	
CastBc		9⅝	
Catterman	+ 44.4	1	
ChemsEnt	+ 36.3	21⅛	+ ⅜
ChelseaP	– 6.6	22⅝	
ChmFin	– 15.2	34⅜	– 1⅛
Chldrmen	– 38.9	6¼	+ ⅛
Chrysir	+ 2.0	36¼	– 1⅛
CitizBkg	– 7.1	27⅛	– ⅜
CodeAlarm	– 24.0	6¾	
Comerica	+ 6.9	45⅛	– ⅛
Comsurer	+103.8	38¼	+ 1⅛
Comairs	+ 5.8	27½	+ ⅜
FdScrw	+ 23.3	26	
FirstWstr	– 15.4	16½	
FrstetAm	– 0.6	44⅛	– ⅛
FstMich	+ 15.6	30½	+ ¼
FordMo	+ 6.5	38⅛	– ⅜
Foremost	+ 10.8	56¼	
FrntStt	– 17.2	10¼	
Gentex	+100.0	4	– ⅛
Gelman	– 14.8	21	– ⅜
GM	– 8.7	48¼	– 1
Gentexs	+ 65.9	18¼	
Handlm	+ 8.7	6¼	
HortonCp	– 12.0	28⅛	
Howtn	+ 27.2	31	
IndsBnk	+ 9.3	29¼	+ 1
Interface	– 41.2	7½	
JPE	– 5.1	9¼	
Jacbsn	+ 28.6	11⅜	– ⅛
Kmart	+ 54.4	11	+ ⅛
Kellogg	– 1.9	75¼	+ 1½
KellyA	+ 10.8	30⅛	+ ⅜
KrasdV	– 13.7	15	+ ⅜
Kysor	+ 8.5	26⅛	+ ⅛
LaZBoy	– 4.9	29⅛	+ ⅛
LearCorp	+ 12.9	33¼	– ⅜
MCN	+ 7.0	24⅜	+ ⅜
MSB Fncl	– 9.2	16½	
Meten	+ 17.2	14½	+ ⅛
Mentrn	– 12.5	1⅜	
OIS	– 12.9	3⅛	+ ⅛
OldKent	– 1.6	38½	+ ⅛
OmniHlt	+ 5.6	28⅛	– ¼
Ottawa	+ 4.0	16¼	– ⅛
PICOM	+ 2.3	22	
Perceptrs	+ 38.2	30¼	+ ¼
Perrigo	– 10.5	10⅛	+ ¼
Pinnacle	+ 19.7	20¼	
Pulte	– 24.9	25¼	+ ¼
ecRander	+ 42.9	⅜	+ ⅛
RedBcn	+ 5.8	11⅜	+ ⅛
Rouge	– 7.9	21⅞	– ⅛
SJS Bcp	+ 1.9	28⅛	
SPX Cp	+ 51.2	24	– ⅜
SeaCms	+ 56.7	28⅛	– ⅜
Scherer	– 13.2	45⅜	
Secm	– 15.9	7⅛	– ⅛
Shoreline	+ 24.3	22	
Sltrnlnd	+ 1.4	9⅛	+ ⅛
Somanetic	+223.5	7¼	+ ⅛
Sothbys	– 2.6	13⅞	– ⅛
SMichG	– 6.7	17	
SpartMot	– 25.2	7⅛	
Spartan	– 8.6	4	– ⅛
StdFedBnk	– 2.2	38½	– ⅛
Stryker s	– 20.0	21	– 1
SunCmts	– 2.4	25⅛	– ⅛
SureShot	– 4.3	3⅜	– ⅛
Taubmn	+ 8.8	16⅜	– ⅛

TAB 10

Rank(R) Database Mode
R 2 OF 6 PAPERSMJ Page

U.S. Agrees to Disclose Chrysler Minivan Crash Test Data
Courts: Lawyers for the government say they will release a videotape and other materials involving the safety of rear-hatch latches on the vehicles.

Los Angeles Times (LT) - TUESDAY August 29, 1995
By: DAVID WILLMAN; TIMES STAFF WRITER
Edition: Home Edition Page: 12 Pt. A
Word Count: 893

TEXT:

WASHINGTON - Under pressure from an activist's lawsuit and facing a skeptical federal judge, government lawyers announced Monday that they intend to make public a videotape of crash tests focusing on the controversial rear-hatch latches of Chrysler minivans.

The agreement to release the videotape and other materials by the end of October was revealed in court here by lawyers representing the government and a safety consultant who has sued an agency of the Department of Transportation to obtain the data.

The judge overseeing the dispute over release of the materials also questioned why none of the latches have yet been replaced. Chrysler and federal transportation officials had announced March 27 that the company, while maintaining that the original latches are safe, would replace the components at no cost to concerned vehicle owners. But the new latches are not yet available to minivan owners.

"Why in the world has it taken four to five months to get a prototype of these latches when you know full well that it takes months (longer) for consumers to actually get their vans in, to get the repairs made, for Chrysler to do what it's supposed to do?" U.S. District Judge Gladys Kessler asked a lawyer for the government.

"What in the world has taken so long, while these vehicles are on the road, being driven by families with children in those vans?" she added.

Failure of the latches may have contributed to the deaths of 37 people and injuries to 76 others, according to investigative reports compiled as of mid-July by the federal Department of Transportation.

Patricia Russotto, a lawyer for the department's National Highway Traffic Safety Administration, told Kessler that the replacement latches still must undergo physical testing to ensure their adequacy.

A Chrysler spokesman said last week that in September, the company hopes to begin contacting the first of more than 4 million van owners who would be eligible to have rear latches replaced. A Chrysler lawyer earlier had argued against release of the government's videotape, saying that the result would be a flood of demands for new latches.

(C) 1995 LOS ANGELES TIMES ALL RTS. RESERV.

Lewis H. Goldfarb, assistant general counsel for Chrysler, said that the company's efforts to replace the latches have been slowed by the difficulty of designing a related, remote-release component that is standard in the 1990s models. Kessler, he said, "really didn't understand" the design issue.

As evidenced by Kessler's comments, the dispute over the status of the videotape and other government investigative data has refocused attention on the Transportation Department's compromise agreement with Chrysler in March.

Safety activists have criticized the Clinton Administration for deciding not to declare the latches defective or to seek a formal recall.

In the event of a recall, an auto maker is subject to increased penalties and vehicle owners are informed, unambiguously, that a safety problem exists.

Under the compromise agreement announced in March, Chrysler has stated in television and print-media ads that the original latches are safe and that the government has not found otherwise but that replacements would nonetheless be offered.

In an interview, Philip R. Recht, a presidential appointee who is deputy director of the highway safety administration, said that the agreement with Chrysler was intended to avoid the delays of protracted litigation.

"We have got to keep our eye on the long-term goal here, which is safety," Recht said.

Yet in court Monday, Kessler took issue with the agency's handling of the latch-replacement matter. Kessler said that when the highway safety agency announced the agreement with Chrysler in March, no indication was given that it would take so long to accommodate minivan owners seeking to replace their original latches.

By the time Chrysler begins replacing the first of the latches, Kessler said, "we are talking about an eight- or nine-month delay between the time of an announcement that got a whole lot of publicity--I think it's fair to say favorable publicity, for the government and the manufacturer--and the time in which any consumer can actually take advantage of that offer in order to make their vehicle safer for themselves and their family. . . . I find that a bit disturbing.

"I think the (highway safety administration's March 27) press release certainly suggested something different to the public and that is of great concern to me," the judge added.

As for the videotape and the other investigative materials, lawyers for the highway safety administration had contended that the data was exempt from disclosure under the Freedom of Information Act because the agency has not formally closed its investigation of the minivan latches. The exemption

(C) 1995 LOS ANGELES TIMES ALL RTS. RESERV.

they cited allows an agency to withhold data if disclosure "could reasonably be expected to interfere with enforcement proceedings."

Russotto said that the government expects to close its investigation by mid-October.

Katherine A. Meyer, a lawyer for Ralph Hoar, the consultant who sued to force disclosure of the investigative materials, reiterated Monday that she believes the government's earlier compromise agreement with Chrysler marked the end of that investigation.

The materials Hoar is seeking, in addition to the videotape, include the "analysis, conclusions and recommendations" of the highway safety administration's staff. The agency showed all of the data to Chrysler's lawyers on Nov. 17, 1994.

Kessler said that if the government does not make public the videotape and the other materials by Oct. 30, "then I am certainly anxious for this case to proceed quickly."

DESCRIPTORS: CHRYSLER CORP; AUTOMOBILE SAFETY; UNITED STATES--GOVERNMENT; VIDEO RECORDINGS

Copyright (c) 1995, Times Mirror Company
(C) 1995 LOS ANGELES TIMES ALL RTS. RESERV.

TAB

11

LAW OFFICES

CHAMBERS STEINER

A Professional Corporation

1490 FIRST NATIONAL BUILDING
DETROIT, MICHIGAN 48226-3592

Telephone (313) 961-0130
Fax (313) 961-8178

KALAMAZOO OFFICE
7040 STADIUM DRIVE
KALAMAZOO, MICHIGAN 49009
Telephone (616) 375-4300
Fax (616) 375-4077

ROSEVILLE OFFICE
25235 GRATIOT AVE.
ROSEVILLE, MICHIGAN 48066
(810) 773-3455

JOHN F. CHAMBERS
SANFORD L. STEINER
MICHAEL S. MAZUR
ALEXANDER T. ORNSTEIN
DARRELL M. AMLIN
COURTNEY E. MORGAN
JEFFREY T. MEYERS
ANGELA J. NICITA
LOUIS G. COREY
JOHN I. KITTEL
RICHARD J. CAROLAN
MICHELLE J. HARRISON
PATRICIA A. MURRAY
CHRISTOPHER S. HARTMAN
FRANKLIN J. CHAMBERS
MARTIN R. STURM
KEVIN P. BURCH
DOUGLAS A. MERROW
LISA A. KLAEREN
FRANK B. MELCHIORE
DANIEL C. BROWN

July 14, 1995

Thomas G. Kienbaum, Esq.
500 Woodward Ave., Suite 4000
Detroit, Michigan 48226-3406

Re: Chrysler vs. Sheridan

Dear Mr. Kienbaum:

I am in receipt of your most recent correspondence regarding the magistrate's recommendation and our providing of information to you regarding office materials. I do not know how you could have reasonably concluded from the correspondence that was forwarded to you that we are of the opinion that there is no basis to conclude that evidence may have been tampered with in this case. Indeed, the anxiety exhibited by the fact that you immediately faxed your reply to me suggests that in reality you hold the opposite opinion. Due to the necessity of my attendance at federal court in Wichita, Kansas this week, I did not believe that I was going to be able to comply with the July 14, 1995 deadline. Now, it appears that we are in a position to comply.

The information provided hereunder is based upon our limited and restricted ability to review materials which were allegedly seized from Mr. Sheridan's work space. That review is neither complete, nor did it have as its purpose the ferreting out of all details of evidence tampering which may exist. Lack of inclusion of any specific item in this list shall not be taken as an admission of the authenticity of such a document or other tangible item.

The document submitted by the plaintiff entitled, "Confidential Inventory of Material from Paul V. Sheridan's Cubicle at the Chrysler Technology Center", dated March 16, 1995, has numerous general inconsistencies and inaccuracies based on defendant's knowledge and cursory examination of the actual inventory:

1. This "inventory" fails to list and does not contain the following files:

- Liftgate Latch - General
- Liftgate Latch - Competitive
- Safety Leadership Team - Meeting Minutes
- Safety Leadership Team - Preliminary
- Liftgate Latch - Safety Office
- H. G. Cook Study
- FMVSS 206 - General
- Seat Back Strength - General
- Seat Back Strength - FMVSS 207 Specifications
- Offset Impact - General
- Rear Crash Survivability - General
- FMVSS - 301
- Side Crashworthiness Issues
- FMVSS - 214
- Bumper Issues - General
- NS-Body Bumper
- Taillamp Studies - Zarowitz
- Amber Taillamp - NS-Body
- Rear Seat Headrest - General and Zarowitz
- Back-up Light - General

2. The "inventory" lists files but inaccurately portrays their original/current contents:

- Box #1 - File "NS Liftgate System". This file contained subfiles such as "Customer Injury", "Saginaw", et al. Also contains photographs that were originally in the "Liftgate Latch - General" file which is missing per #1 above. (see page 4 of inventory).

- Box #1 - File "NHTSA News" contains only half its original contents (see page 4 of inventory).
- Box #1 - File on "Muth Technologies" not listed; subfile "RSZ" not listed (see page 4).

- Entry on page 8 of inventory indicates that a file contained "correspondence for Dr. Detroit Motorsports". No correspondence was ever sent to Mr. Sheridan's Chrysler office for Dr. Detroit Motorsports, nor was any on file at that location.

3. The "inventory" identifies files and file locations by box number but the location identified was found to be inaccurate.

4. The "inventory" fails to explain/list file materials that were found in the actual inventory by defendant:

- Documents relating to FMVSS-208 dated December 21 were found in Box #1 in file "NS-Restraints". This file is not listed on inventory. (see page 4)

5. This "inventory" fails to accurately explain/list documents allegedly found in the cubicle, as described during the deposition of plaintiff's investigators.

6. The "inventory" fails to list files that were found in the actual inventory.

7. The "inventory fails to list/identify location of specific video tapes:

- Environmentally Safe Oil Changes
- Formula SAE
- IIHS Bumper Tests
- Etc.

8. The "inventory" fails to accurately list contents of computer disks and computer hard drive.

This response is not complete. Further examinations of inventory is still pending. Preliminary examinations cover documents listed through page 18, but not Box #7. Document listings from page 18 through 39 have not yet been examined.

Sincerely,

Courtney E. Morgan, Jr.

CEM/mn
cc: George Googasian, Esq.
(Via Facsimile)

TAB

12

THE WALL STREET JOURNAL INTERACTIVE EDITION

FROM THE ARCHIVES

The Wall Street Journal Interactive Edition -- November 19, 1997

Why One Jury Delivered a Big Blow To Chrysler in Minivan-Latch Case

By MILO GEYELIN
Staff Reporter of THE WALL STREET JOURNAL

Two months before Sergio Jimenez II was thrown from the back seat of his parents' 1985 Dodge Caravan and killed three years ago, a group of production experts at Chrysler met to review recommendations that might make future minivan models more competitive.

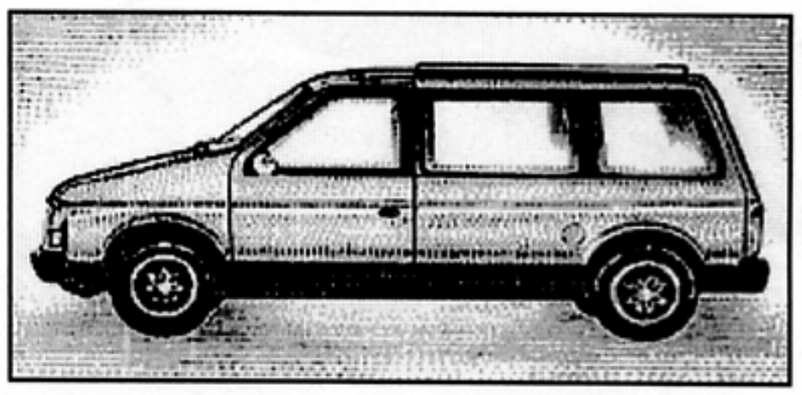

At the top of the list was safety. Chrysler's rear-door latches appeared to be failing sometimes, even in low-speed accidents, allowing the lift-up doors, or liftgates, to pop open and passengers to be hurled out. Why not make the latches stronger, like those on a later minivan model, the Ford Windstar, suggested Paul Sheridan, then head of Chrysler's Minivan Safety Team.

"That ship has sailed," the minivan's top production engineer replied, according to Mr. Sheridan. "We told you that last time. Next subject." The engineer says he was misunderstood.

Link

How a Tiny Law Firm Won a Mammoth Case

Last month, a federal jury in Charleston, S.C., awarded Sergio's parents and sister $262.5 million in damages, including $250 million intended to punish Chrysler Corp. After deliberating 2 1/2 hours, the jury found that Chrysler's negligent design and testing of the latch had caused six-year-old Sergio's death.

Narrow Focus

The award, which Chrysler intends to appeal if the judge doesn't set it aside, set a record in the auto industry and shocked Chrysler. The company strongly denies any defect involving the latch and maintains that crash statistics prove its minivans are among the safest on the road. At the month-long trial, it argued that Sergio was thrown out a side window, not the rear door. It also contends the judge erred in narrowing the trial's scope so that jurors couldn't hear certain testimony, such as that Sergio's mother may have caused the accident

by running a red light and that Sergio wasn't wearing a seatbelt.

"The magnitude of the verdict suggests that something really went wrong with the process of the trial," says Kenneth Gluckman, Chrysler's top in-house lawyer for product-liability lawsuits.

Two years ago, the National Highway Traffic Safety Administration calculated that Chrysler liftgates pop open in collisions more frequently than its competitors'. It said the rate of passenger ejections was nearly double that of the rest of the minivan industry. Facing a possible recall, Chrysler agreed to replace the latches on 4.3 million minivans it had built since 1984. So far, Chrysler has spent $115 million notifying minivan owners and installing new latches on about 61% of its minivans on the road that had the old-style latches.

More Coming

The threat of high-profile safety litigation is one the auto industry has lived with for decades, from Pinto gas tanks to sudden-acceleration claims to allegedly unstable sport-utility vehicles to GM pickups with side-mounted fuel tanks. Thirty-seven people have been ejected from Chrysler minivans and killed, according to the NHTSA. That is more than the 26 who died from burns in Ford Motor Co.'s Pinto but fewer than the 168 fatalities in General Motors Corp.'s C/K pickup trucks with side fuel tanks.

The Chrysler litigation is potentially more volatile because many of the suits involve children. "Basically you're gambling when you take one of these to trial," says Clarence Ditlow, a consumer advocate in Washington. "If your judgment is wrong, you come up with verdicts like in South Carolina. The potential amount of the award is so large that even if only 25% of the cases come up winners, you're still talking big money."

Arrayed against Chrysler is an alliance of plaintiffs' lawyers who have been jousting with the company for two years to gain access to internal documents and depose witnesses. Leading the Jimenez case was the Washington firm of Ross, Dixon & Masback, notable because the firm normally specializes in defense work. Chrysler currently faces about 40 injury or wrongful-death suits involving the latch, and more are expected. In the only other one to go to trial, Chrysler won when the jury found that the latch was defective but the victims fell out a side window.

While the damage award in the Jimenez case is likely ultimately to be reduced, the case raises concerns that seem sure to haunt the nation's No. 3 auto maker in future trials.

Among them:

- Chrysler marketed the minivan since the early 1980s as a family vehicle, but used a latch variation in early models that the rest of the industry had abandoned for passenger doors in the 1960s. The company altered the latches for new vehicles in 1988 but didn't inform owners of models already on the road, including the Jimenez family. And the modified latches still didn't meet the federal safety standard for passenger doors, a

standard that Chrysler's competitors either met or came closer to.

- Chrysler destroyed early films of minivan-crash tests, design documents and computer records, actions the company says are routine.
- Engineers considered an additional method of strengthening the latches on new models for as little as 25 cents apiece in 1990 but didn't do so because the move would have undercut Chrysler's position with safety regulators that there was no problem with the latches.
- Chrysler tried political persuasion to resist a recall after being warned by NHTSA in November 1994 that "the latch failure is a safety defect that involves children."

Cumulatively, says one of the jurors, the evidence painted a devastating picture of corporate indifference. "We want people to understand why we made the decision we did," says Linda Jordan, a 42-year-old business consultant. "We knew what we were doing. When you speak to a company as big as Chrysler, you've got to speak to them on terms they'll understand."

Chrysler conceived of the minivan, with its huge rear door, or liftgate, in the early 1980s and marketed it primarily to mothers with young children. The doors are latched secure at the bottom of the door frame and swing up and out of the way for ease in loading and unloading. The vans, the Dodge Caravan, the Plymouth Voyager and the Chrysler Town and Country, caught on immediately and helped bring about the company's resurgence. They were widely imitated, but Chrysler continues to dominate the U.S. market.

In the early 1980s, however, the concept was so new that there were no federal safety standards in place for liftgates. Chrysler was left to create its own.

What it came up with was weaker than the standard for passenger doors. Most of the pending lawsuits contend the latches are substandard because they bend or tear loose in an accident, freeing the hatch to pop open. But lawyers in the Jimenez case pointed to another alleged flaw: the design of the latch in early minivans. The company used a claw-shaped fork that latched around a thumb-sized metal post at the base of the door.

The posts, known as strikers, had been manufactured for decades with mushroom-shaped heads at the top. The reason: The impact of a collision could force latches to ride over "headless strikers," popping open the door. And since ejections from vehicles had long been recognized as a leading cause of death in car accidents, headless strikers hadn't been used in passenger doors since the 1960s.

But Chrysler chose to mill off the heads. Engineers believed the head, or flange, might snag cargo, such as grocery bags. Federal regulators required no crash tests on the new latches, and Chrysler performed none.

That was the first of many decisions that would trouble the jury. "I think we all felt that any time you're designing something new to put on a vehicle that you're marketing to a family, you should be

checking out every aspect of what you're doing," Ms. Jordan says.

Missing Reason

Then came Chrysler's decision in mid-1988 to replace the headless striker in new models with a flanged striker. The witness Chrysler used to explain why, a retired body designer, wasn't involved in the decision. "We can't explain the reason for making that change," said Jerome E. Mitchell Jr., who, like most Chrysler witnesses, testified in a videotaped deposition. In a postverdict interview, Chrysler officials still couldn't explain the change.

A midyear design alteration would normally involve stacks of paperwork, proposals and meeting minutes. "It was a number of years ago and those documents simply don't exist any more," Mr. Mitchell said. He testified that he asked the people who were involved in the decision, but no one could recall.

That hurt Chrysler's credibility. "They never could say why they did it," says juror Linda Ward, a 48-year-old secretary who bought her third Chrysler minivan in June to haul around her two grandchildren. "You know they did it for a reason. You know they did it because they felt it was unsafe."

Another problem for Chrysler was that two films of tests involving left-side crashes at Chrysler's proving grounds in Michigan in 1983 were missing. The executive in charge of impact testing at the time, William Shollenberger, testified that Chrysler always filmed its tests and always kept a record of any anomalies in a computer log. But he couldn't explain why films of the two tests had been pulled from the archives, shredded and burned in 1988. Films of tests done at about the same time, involving front-end collisions, were still available. Two lines of data from the log had also been deleted.

Films Destroyed

Mr. Shollenberger said the company routinely destroys test films after five years, unless the vehicle is the subject of a lawsuit. He had no explanation for why films of left-side collisions were destroyed, but not some films of tests performed before and after involving front-end collisions. And two lawsuits involving the latch were pending when the films were destroyed. Chrysler said the tests were irrelevant because they had been done to see how the minivan's fuel tank held up, not its rear-door latch. Moreover, while no one could recall whether latches broke, Chrysler re-enacted the tests for the trial and found nothing wrong.

"That seemed very deceitful to me," Ms. Ward says. "I mean, why would you just lose that certain test in that certain year? I work in a real-estate office, and I know how important it is to save every note and every piece of paper."

By May 1990, regulators at NHTSA were becoming concerned about the crashworthiness of rear-door latches, noting in a letter to all manufacturers that liftgates and hatchbacks tended to fly open in accidents far more frequently than passenger doors. The safety agency asked each company to look at its own crash-test standards

for liftgates to determine whether they should be toughened.

Although some competitors' liftgates also didn't meet the federal standard for passenger doors, all came closer than Chrysler's. Still, the company maintained that an upgrade wasn't needed. Seat belts were the best protection against being ejected from a minivan, it wrote to the agency.

But when Chrysler tested its latch, the results were mixed. In one test, it pulled apart at 1,300 pounds of force, far below the federal passenger-door standard of 2,000 pounds, according to internal records presented by the plaintiffs at the trial. The company assigned senior engineer Henry G. Cook to calculate the cost of meeting the federal standard. His estimate: 25 to 50 cents per latch, plus a one-time cost of $125,000 to retool machinery to make thicker and stronger parts, he wrote in a July 1990 memo. The latches could be modified in 32 weeks, he estimated.

But Mr. Cook recommended against it. "As stated in our response to NHTSA that we do not believe there is a significant problem with liftgate retention," Mr. Cook wrote in July 1990, "I recommend that we continue with the current latch system at least through 1993 unless mandated to change by NHTSA."

The jurors saw that as shortsighted. "I was surprised they didn't go ahead and correct the problem," juror Bennie Rhett says. "I felt like they should have done it," Ms. Jordan says. "I have no idea why they didn't, and they couldn't tell you why."

Slipping Sales

For Chrysler, the latch problem -- and how it ultimately would come to be perceived by jurors -- would only get worse in the early 1990s. While the company was marketing safety as its first priority in national ad campaigns, it was concerned about minivan accidents in which children had been killed. In the Detroit suburb of Mount Pleasant in late 1992, a Chrysler-minivan liftgate had popped open in an accident in which two infants in the rear seat had been ejected and killed.

Mr. Sheridan testified that at the time, when he was a Chrysler planning analyst, the company had another concern: Sales appeared to be slipping because of safety concerns. To attack the problem, he said, Chrysler appointed him as chairman of a 13-member Minivan Safety Team. The group, Chrysler maintained at trial, was assembled to look at marketing concerns about safety that could be addressed in a revamped design for the 1996 minivan.

When it met for the first time in February 1993, Mr. Sheridan said, the Mount Pleasant accident was fresh in the minds of all. An in-house lawyer cautioned the group that no notes should be taken, Mr. Sheridan said, adding that meeting minutes he drafted later and circulated were ordered rounded up and destroyed. And in April 1993, when he recommended to the development team that latches be replaced in existing vehicles, Mr. Sheridan testified, he was turned down.

Any drastic changes in the existing latch, he said he was told by Chrysler's top production engineer for minivans, Chris Theodore, "would indict everything we have done in the field." It was a year later, Mr. Sheridan testified, when he raised the issue again, that Mr. Theodore told him, "That ship has sailed."

Credibility Strategy

Mr. Theodore says he doesn't recall the earlier meeting. As for the remark about the ship having sailed, Mr. Theodore says he wasn't addressing the issue of whether to replace existing latches but rather a question about latches for a coming minivan model.

However, at the trial, Chrysler presented no witnesses to dispute Mr. Sheridan. This is a move, the spokesman says, that the company isn't likely to repeat in any future trial. The defense team, which was led by David Tyrrell of Tampa, Fla., confined itself to attacking Mr. Sheridan's credibility.

Defense lawyers cast him as a disgruntled and dishonest former employee who had no engineering experience. Mr. Sheridan had been demoted on grounds of poor performance and later fired for allegedly leaking crash-test results unrelated to the minivan to a trade magazine, the defense said. Mr. Sheridan says he didn't leak any results.

The jury found him credible. An accomplished race-car builder, Mr. Sheridan had at times received glowing performance reviews at Chrysler. In 1985, he had won the coveted Lee Iacocca Chairman's Award for excellence. And unlike many of Chrysler's witnesses, jurors noted later, Mr. Sheridan wasn't paid to testify.

"I believed every word he said," Ms. Jordan says. "I really did, because I felt like he really didn't have anything to lose."

Jurors also didn't believe Chrysler expert witnesses who said the child must have been ejected through a side window, not the back. Plaintiff lawyers unearthed six crash witnesses, who testified that Sergio was thrown out the back door.

By the time Mr. Sheridan was fired in December 1994, federal regulators were taking a hard look at the minivan latch. A preliminary inquiry had been launched a year earlier after two children had been ejected from a 1992 Chrysler minivan outside Washington, D.C., and one was killed. The police officer who investigated had complained to NHTSA that the impact of the collision wasn't severe enough to justify a liftgate's popping open.

In February 1994, the inquiry had broadened into a full-blown investigation of all Chrysler minivan latches. But by then, Chrysler had already decided to make the latches 50% stronger for models beginning in 1995. The question was whether it should replace latches in vans already on the road as part of a voluntary recall. NHTSA had the authority to request such a recall by issuing a public letter even before it pinpointed the precise defect.

And indeed, asking for a voluntary recall appeared to be the direction

the agency was taking when, in November 1994, it invited a team of Chrysler executives to review data and crash-test films in Washington. Using an overhead projector, NHTSA investigators flashed bar graphs of data comparing Chrysler minivan accident statistics with its competitors'.

Chrysler minivan liftgates, they said, popped open twice as frequently. In two crash-test videos played in slow motion, Chrysler minivans were rammed on the left rear side at speeds of 31 to 37 miles per hour. Each time, the liftgates buckled and tore off at the latch as the vehicles spun violently, hurling unbelted test dummies out the back door. In similar tests of its competitors' vehicles, the doors held. And, in fact, the door also held in a test of a 1991 Chrysler minivan fitted with the strengthened latch.

Political Moves

But Chrysler wasn't persuaded. It countered with a blizzard of its own data challenging the government's. And then, in a move that jurors said disturbed them, the company mounted a campaign in Washington to pressure NHTSA into dropping its voluntary-recall policy.

"If we want to use political pressure to try to squash a recall letter we need to go now," Vice Chairman Tom Denomme told Chairman Robert Eaton and President Robert Lutz in December 1994, according to a memo shown to jurors.

Chrysler's Washington office mobilized, contacting the House Commerce Committee, which oversees NHTSA and where auto makers have an ally in Michigan's Rep. John Dingell, the committee's ranking Democrat, according to correspondence used as evidence at the trial. Chrysler helped committee staffers draft a letter criticizing the recall policy. It was signed by Mr. Dingell and Committee Chairman Michael G. Oxley and sent in January to Richard Martinez, NHTSA's administrator at the time.

Publicly asking auto makers to recall cars because of a suspected defect before an investigation is complete could hurt a company's safety record, the congressmen complained. Instead, why couldn't NHTSA and auto makers agree to a "confidential settlement"?

The letter didn't specifically address Chrysler, and NHTSA says no pressure was exerted. However, in March 1995 Chrysler agreed to replace the latches on existing minivans without acknowledging they were defective or that passengers could be killed or injured in ejections.

Under terms described in one Chrysler document shown to the jury, which the company called a proposed settlement, there would be "no acknowledgment of [a] defect to NHTSA or to owners' and "no acknowledgment of [a] safety problem." In Chrysler's proposal, NHTSA would agree to deny requests by the public for copies of the crash tests. NHTSA denies knowing of any proposed settlement and says its policy is always to block the release of findings, including crash-test films, until its investigations are formally closed and the agency issues a report.

Chrysler maintained throughout the trial that its lobbying effort wasn't aimed specifically at the minivan. "No sir. That absolutely did not happen," said Chrysler's chairman, Mr. Eaton. But the jury wasn't persuaded. "All of that just incriminated them so badly it wasn't funny," Ms. Jordan says. "I just think it was one more piece of the same puzzle. It was very damaging to them. On a scale of one to 10, it was about an eight."

And Mr. Eaton, she and two other jurors who were interviewed agreed, was a terrible witness. Appearing to some jurors as indifferent in his videotaped deposition, Mr. Eaton staunchly defended the old latches and the minivan's safety record. But Mr. Eaton testified that he didn't know why passenger-door safety standards were promulgated, had never reviewed NHTSA's materials regarding the Chrysler latch, didn't know about the Minivan Safety Team, was unaware of whether Chrysler had ever conducted minivan crash tests and had never looked at a latch.

"Every question he was asked, he answered, "I don't know. I don't remember. I can't recall," " Ms. Jordan says. "If you're going to be chairman of the board of a company you've got to know what's going on. None of us believed he didn't know what was going on."

Return to top of page

Copyright © 1998 Dow Jones & Company, Inc. All Rights Reserved.

TAB

13

CBS

CBS Evening News

January 7, 1998

(c) MCMXCVIII, CBS Inc. All rights reserved. Prepared by Burrelle's Information Services, which takes sole responsibility for accuracy of transcription. No license is granted to the user of this material other than for research. User may not reproduce any printed copy of this material for commercial purposes or in any fashion that may infringe CBS Inc.'s copyrights or proprietary interests in such materials.

DAN RATHER, anchor:

Tonight's Eye on America digs deeper into a story we first reported last year about a record liability judgment for the death of a child in a Chrysler minivan. What was not widely known at the time and what CBS' Anthony Mason now reveals, is how far Chrysler had gone to head off a costly and embarrassing safety recall of its best-selling vehicle.

ANTHONY MASON reporting:

This is where Sergio Jimenez died in 1994. This is how the six-year-old South Carolina boy was killed. Sergio's parents say their Chrysler minivan was hit crossing the intersection. The rear gate popped open. Sergio was thrown out. His skull was crushed. The family sued Chrysler, claiming the rear-gate latch was defective.

Unidentified Man #1: The latch can ride up and over it.

MASON: In October, the Jimenezes won the biggest judgment ever against an automobile company--$262 1/2 million.

The Jimenez case also revealed this series of confidential Chrysler documents that made a lasting impression on the jury. Critics say the documents portray a corporate giant ready to pull out all the stops to protect its most profitable product, ready even to manipulate the government agency that was threatening to order a recall.

NHTSA, the National Highway Traffic Safety Administration, had already conducted its own crash tests on Chrysler minivans. Watch the result: On side impact, the rear latch failed, the passengers flew out.

Mr. PHIL RECHT (NHTSA Deputy Administrator): This problem led to over 135 separate incidents of ejection, approximately 90 injuries, close to 40 fatalities.

MASON: NHTSA warned Chrysler that preliminary tests on its '84 to '94 minivan latches showed, quote, "a safety defect that involves children." The alarm sounded at Chrysler. A government-ordered recall would threaten $2 billion a year in minivan profits. The company chairman, Robert Eaton, was warned in an internal memo: `If we want to use political pressure to try to squash a recall letter, we need to go now.'

(Excerpt from videotape)

Unidentified Man #2: Have you ever tried to squash an investigation?

Mr. ROBERT EATON (Chairman, Chrysler): No, sir.

(End of excerpt)

MASON: When Eaton testified on videotape in the Jimenez trial, he didn't remember the memo.

(Excerpt from videotape)

Mr. EATON: Nor--nor to my--to my knowledge, was there any activity whatsoever to squash a recall letter because obviously we didn't get a recall letter. It was...

Man #2: Because you squashed it.

Mr. EATON: Definitely not, sir.

(End of excerpt)

Ms. JOAN CLAYBROOK (Consumer Advocate): It's obvious that--that Chrysler will do anything to stop this recall.

MASON: Joan Claybrook is a former head of NHTSA.

Ms. CLAYBROOK: They're willing to use political pressure or--or anything else to figure out how to stop the Department of Transportation from requiring them to recall these minivans.

MASON: So Chrysler went to Capitol Hill. A month later, another minivan latch memo to Chairman Eaton reported, quote, "We've been working on a letter with Hill staff." In the margin, a handwritten note, `Hopefully, this won't leak.' But Eaton testified he had no idea what `Hill staff' meant.

(Excerpt from videotape)

Man #2: But--but you know that the Hill staff are people who work for congressmen and senators on the Hill, right?

Mr. EATON: Very likely, but it could be some man or woman by the name of Hill.

(End of excerpt)

MASON: In fact, it was Congressmen John Dingell and Mike Oxley, whose committee controlled NHTSA's pursestrings. Just as NHTSA was considering a Chrysler recall, the agency received this letter from the congressmen, pointedly challenging its recall policy. The letter questioned NHTSA's practice of making preliminary data public, rather than waiting for conclusive findings. Written with Chrysler's help, the letter never mentioned the latches. But the congressmen clearly intended to chill the minivan investigation, according to Joan Claybrook.

Ms. CLAYBROOK: Dingell and Oxley framed their letter as a policy matter, but everyone knows that it's all about the minivan. These members of Congress wanted to stop a recall on behalf of one of their constituents, Chrysler Motor Company.

MASON: The congressmen and Chrysler declined to be interviewed on camera. They insist the letter was only intended to address broad NHTSA policy and that they did nothing improper.

NHTSA deputy administrator Phil Recht, who received the letter, did agree to speak with us on camera.

Mr. RECHT: I did not view this letter as any attempt to affect the outcome of--of this case.

MASON: But you felt no pressure at all from that letter?

Mr. RECHT: It really had no impact on us.

Unidentified Man #3: Today we are announcing an unprecedented action.

MASON: Nevertheless, just two months after the congressmen wrote their letter, Chrysler and NHTSA cut a deal: No recall. Chrysler agreed to replace the old latches, but on its terms, with no admission of a defect or safety problem.

(Excerpt from videotape)

Mr. EATON: They didn't find a defect, because there isn't a defect.

Man #2: Because you talked them out of it--your company talked them out of it by saying to them, `We'll voluntarily fix it. The deal will be...'

Mr. EATON: No. No, sir.

Man #2: `...no recall by you and we'll fix it,' right?

Unidentified Man #4: Objection.

(End of excerpt)

MASON: Chrysler is appealing the landmark $262 million judgment. Meanwhile, 1 1/2 million Chrysler minivans with the old latches are still on the road. Despite 37 deaths and 40 pending lawsuits, Chrysler continues to insist those latches are safe. In New York, I'm Anthony Mason for Eye on America.

(Announcements)

DAN RATHER, anchor:

Our top stories tonight dealt with universal life-and-death issues in the Terry Nichols jury room and in the cloning laboratory. There is also news about our place in the universe. Scientists today report the best evidence yet a big black hole is the gravity anchor at the center of our own Milky Way galaxy. And they've found another black hole that spews tremendous energy drawn from a nearby star every 30 minutes. They call it Old Faithful. And to underscore humanity's need to know what's out there, NASA's new lunar exploring satellite was successfully launched last night and is now well on its way to try and sniff out moon minerals and hidden ponds of moon water, all part of our worlds tonight.

DAN RATHER, anchor:

That's the CBS EVENING NEWS. Here's Bryant Gumbel now with a preview of tonight's "Public Eye."

BRYANT GUMBEL (Host, "Public Eye"): Tonight on "Public Eye," we talk exclusively with Susie Coehlo, ex-wife of the late Sonny Bono; plus a Church of Scientology mystery. When a young woman died after 17 days in her church's care, her family sued for wrongful death. Now the church is fighting back. "Public Eye" tonight.

RATHER: For the CBS EVENING NEWS, Dan Rather reporting. Good night.

TAB

14

Article View

Article 8 of 14
BUSINESS
Chrysler joins forces with Dingell in attempt to avoid minivan recall Firm, congressman argue U.S. can't request a recall without first proving that vehicles pose unreasonable' safety risk.
Bryan Gruley

02/01/95
The Detroit News
2DOT
Page E1
(Copyright 1995)

Detroit News Washington Bureau

Chrysler Corp., with the help of two key congressmen, is trying to throw an unusual legal obstacle in front of federal safety regulators who would like the automaker to recall four million minivans.

In a Jan. 20 letter to the National Highway Traffic Safety Administration, **Chrysler** lawyer Lewis Goldfarb argued that the administration cannot request a recall without first proving that the minivans pose an "unreasonable" safety risk.

Reps. John Dingell, D-Dearborn, and Michael Oxley, R-Ohio, made similar arguments in a Jan. 17 letter to NHTSA chief Ricardo Martinez.

Oxley is chairman and Dingell is the ranking minority member of a House panel that soon will be reviewing the agency's budget.

The letters, obtained by The Detroit News, question NHTSA's long-used tactic of sending a written request to a manufacturer for a recall before reaching a final determination that a vehicle is unsafe.

The request is designed to give an automaker a chance to show why a recall is unwarranted.

The manufacturer can decline the request _ as General Motors Corp. did in 1993 when NHTSA asked for a recall of its 1973-87 pickup trucks _ or agree to a voluntary recall.

Dingell's letter said a recall request unfairly and publicly casts the manufacturer in a negative light before NHTSA has completed its work.

"Several auto companies raised this concern" in the wake of the controversial GM truck case which was settled last December, a congressional aide said.

The pleas by the congressmen and **Chrysler** suggest the automaker is leaning toward resisting a recall of its 1984-94 minivans, which are alleged to have defective rear-door latches that allow passengers to be ejected in crashes.

Last month the automaker sharply criticized NHTSA in two letters alleging that: NHTSA conducted crash tests that, in **Chrysler** 's view, were designed specifically to make the rear latches fail. "We know that any minivan can be opened with a similar test," said Steve Harris, a **Chrysler** spokesman. NHTSA's statistical analyses are flawed because they do not include all vehicles with rear hatches, such as station wagons and sport utility vehicles.

Sources close to the investigation say NHTSA officials don't consider the crash test to be their most important evidence and that a recall may be in order, although a final decision has not been made.

Some **Chrysler** officials have privately urged that the automaker take steps to remedy the latches.

Return to Headlines

Copyright © 1998 Dow Jones & Company, Inc. All Rights Reserved.

VIA FAX - Page 1 of 5

REDACTED DOCUMENT

Date
January 18, 1995

To - Name & Department
Bob Eaton, Tom Denomme, Ron Boltz, François Castaing, Rob Liberatore, Bud Liebler

From - Name & Department
Al Slechter

Client Number
936-00-00

Subject: **MINIVAN LATCH CASE**

Attached is the letter to Rick Martinez which we have been working on with Hill staff. The final is signed by Mike Oxley and John Dingell. Several things should be noted:

- Tom Bliley was briefed on this subject by staff and, for whatever reasons, he decided to defer the signature to Mike Oxley. This can be read as the first example of the "Bliley process" and signals less attention by Bliley to our industry problems. A second reading, however, is that the relationship between Bliley and Oxley has been somewhat strained and that Bliley is deferring to Oxley's subcommittee jurisdiction.

- As you will see, the letter was substantially toughened by staff and we are aware that Dingell's staff was instrumental in further fleshing out the questions raised in the letter.

- As you may be aware, GM delayed their approval of this letter in the final stages of drafting. [redacted]

- It would not be surprising if, when GM sees the final product, they are exercised that we did not give full weight to their input. We have only so much influence on the specific content of this type of letter once it is put in the hands of the staff for final work.

- From my vantage point, it is a much improved and tougher product and will hopefully have a positive effect on our situation.

AJS/st

Eaton
EXHIBIT NO. 18
8-28-97
M. MOORE

RECEIVED
JAN 1 1995
A.

AL000273

[illegible]
[illegible]
[illegible]

We are concerned with this voluntary recall process for several reasons. The request for voluntary recall, because it is made public, can have an adverse impact on the safety reputation of the product as well as the manufacturer. It can create anxiety among all vehicle owners regarding the safety of their vehicles. It forces the manufacturer to choose between conducting a costly recall prior to any finding of defect OR risking a public perception that the vehicles are unsafe, with the attendant bad press. The exploitation of this process by trial lawyers and others is also troublesome. Given the frequency of ODI's subsequent closing of the case after the manufacturer declines a recall request, the process can be seen in many cases as a coercive device used to impose requirements beyond the law.

General Motors' experience with the C/K truck suggests that there may be a category of investigations where the use of the voluntary recall letter is contrary to the statutory purposes of the Safety Act. In the GM case the IG found that the recall request was made prematurely because in February 1993 Department officials wanted to speed up an investigation began only two months earlier, thereby misleading the public regarding the safety of the GbI truck and causing great hardship to GM. To placate those officials, NHTSA, not the ODI, recommended in April 1993 that the Secretary authorize ODI to send a voluntary recall letter to GM and to require GM to provide a detached justification if they refused to do so. ODI anticipated GM's response would be negative and that the explanation would provide additional information relevant to the investigation. That was a misuse of the process based on interference in the investigation by the Department. The harm was compounded when the Secretary announced an initial decision based, in part, on his apparent belief that the voluntary recall request by ODI was tantamount to a staff finding of defect.

While the GM case may be unique in certain respects, it clearly illustrates how a well-intentioned, informal procedure can be grossly misconstrued by the public and senior policy makers, with extremely harmful consequences to a manufacturer and its products. The misuse of such a procedure, it seems to us, does a disservice to the agency and its mission to ensure the safety of our highways.

In addition to your general review of the voluntary recall request we ask that you respond to the following questions:

(1) What is NHTSA's authority under the Motor Vehicle Safety Act for using this process?

(2) What procedures are in place to ensure uniform application of this process?

(a) Is a threshold level of evidence required before a letter may be sent?

(b) Are staff decisions to request voluntary recall reviewed at a higher level?

(3) In light of the GM case, is it reasonable for us to assume that these procedures are not binding on the ODI or NHTSA and that they can be ignored at the whim of Departmental officials? Clearly, the ODI Control Plan is only a guideline document.

(4) What is the frequency of case closings after a voluntary recall request is sent?

(5) At the time a request for voluntary recall is made, how close is the agency to an initial decision of defect of closure?

(6) Has NHTSA considered any alternatives to this process that would accomplish the same purpose but avoid unfairly disparaging a product and alarming its owners?

(7) Can this process be revised to avoid the kinds of problems documented in the GM case?

(8) In light of the IG's finding in the GM case that NHTSA felt pressured to issue a recall request letter prematurely, what safeguards do you plan to put in place to assure that recall request letters are not issued until an appropriate investigation has preceded the decision to send such a letter?

(9) The IG's report confirmed that the "recall request letter" is a misunderstood device, and that even the Secretary of Transportation misconstrued the importance of the letter, erroneously believing it to reflect a definitive agency position. Given this confusion about the meaning and import of a "recall request letter," is it now appropriate to revisit the process by which it is decided to send a letter? In particular, what are the advantages and disadvantages of delaying the issuance of any such recall request until after the evidence in the investigation has been thoroughly reviewed by the Associate Administrator for Enforcement and the Defect Review Panel?

(10) It seems that a recall request letter resembles a settlement proposal, in which the agency staff suggests that its concerns about a matter could be resolved if the targeted company agrees to take a particular action, in this case a voluntary recall. Other law enforcement agencies under the jurisdiction of this Committee, such as the Consumer Product Safety Commission and the Federal Trade Commission, consider their comparable procedures to be confidential settlement discussions, and do not place records pertaining to such discussions on the public record. What is the rationale behind NHTSA's practice of preparing written "recall request letters" and placing them in the public record, rather than treating such staff requests as confidential settlement proposals? Why shouldn't NHTSA consider a "recall request" to be a confidential settlement proposal between the agency and the regulated party?

(11) At what stages of an investigation is information made public by NHTSA or ODI prior to any determination of defect? What is the origin of this policy? Is this a sound practice when an investigation may not be sufficiently complete to determine a defect?

(12) Does NHTSA have the legal authority to revise its defect investigation procedures in order to treat "recall requests" as confidential settlement proposals?

(13) In light of the GM experience, what actions are you taking or planning to take to improve the integrity of the investigative process as contemplated by the regulations and the precedents so that ODI experts can conduct investigations in a timely and fair manner without unnecessary interference from Departmental officials?

We appreciate your attention to this matter, and respectfully request your response within 10 business days. We presume that now that the GM case is closed, your recusal will no longer preclude you from responding to these matters. If that is not the case, please explain why and have the Deputy Administrator respond.

Sincerely,

Michael G. Oxley
Chairman
Subcommittee on Commerce, Trade and Hazardous Materials
Committee on Commerce

John D. Dingell
Ranking Democratic Member
Committee on Commerce

TAB

15

In The Matter Of:

Paul V. Sheridan v.
Chrysler Corporation, et al

CLARENCE V. DITLOW
March 25, 1998

Beta Reporting
910 17th Street, N.W.
Suite 200
Washington, DC 20006
(202) 638-2400 or (800) 522-2382

Original File AADITLOW.TXT, 194 Pages
Min-U-Script® File ID: 1513910738

Word Index included with this Min-U-Script®

[6] **Q:** What is Exhibit 10?

[7] **A:** Looks like a transcript of a [8] program called "A Current Affair" on [9] September 20, 1995, and the subject of the [10] story is "Chrysler Minivan Hotline Story."

[11] **Q:** Are you a person who is quoted in [12] that particular presentation by "A Current [13] Affair"?

[14] **A:** Yes, I am.

[15] **Q:** And what is it that you indicated [16] on that program?

[17] **A:** That the Chrysler rear door latch [18] is one of the most lethal defects that we've [19] seen in auto safety history.

[20] **Q:** Have you ever been sued by Chrysler [21] for having made that statement, sir?

[22] **A:** No.

Page 160

[1] **Q:** Let me show you what's been marked [2] as Exhibit No. 11 and ask if you can identify [3] that.

[4] **A:** Yes. This is a letter from [5] Congressmen Dingell and Oxley to Dr. Richard [6] Martinez. It says Richard Martinez, but it's [7] actually Ricardo Martinez. He's the [8] administrator of the National Highway Traffic [9] Safety Administration.

[10] **Q:** Is that the letter you were [11] referring to earlier on the record that comes [12] from Exhibit 1 and was part of the effort by [13] Chrysler to use the federal Congress to [14] pressure NHTSA with respect to the recall?

[15] **MR. KIENBAUM:** Objection. Lack of [16] foundation.

[17] **THE WITNESS:** Yes. This letter is [18] written to be generic about questioning the [19] tactic of the agency of asking for a [20] voluntary recall request. And it was in no [21] uncertain terms taken to mean that they're [22] referring to the agency about the issue of

Page 161

[1] voluntary recall request for the Chrysler [2] minivan latch.

[3] **BY MR. MORGAN:**

[4] **Q:** Why do you say that?

[5] **A:** Because that was the hottest [6] investigation down there. The staff of the [7] agency were about to issue such a voluntary [8] recall request.

[9] **Q:** Do you have a source of information [10] at NHTSA for that testimony?

[11] **A:** Yes.

[12] **Q:** Was your answer yes?

[13] **A:** Yes.

[14] **Q:** Can you identify that person?

[15] **A:** No.

[16] **MR. MORGAN:** Mr. Ditlow, then I [17] have no further questions.

[18] **THE WITNESS:** Wait. I want to make [19] sure that I answered your question correctly. [20] You asked me can I or would I?

[21] **MR. MORGAN:** I did ask you "Can [22] you." The portent of my question is " Would

Page 162

[1] you."

[2] **THE WITNESS:** I can, but I won't.

[3] **FURTHER EXAMINATION BY COUNSEL FOR**

[4] **DEFENDANTS/PLAINTIFF CHRYSLER CORPORATION**

[5] **BY MR. KIENBAUM:**

[6] **Q:** Going back to that last question [7] and answer, Mr. Ditlow, tells me that what [8] you were talking about just before then was [9] based on something someone else has said to [10] you, but you're not prepared to identify the [11] speaker; is that correct?

[12] **A:** Yes.

[13] **Q:** In light of the fact that you have [14] acknowledged that you have never designed, [15] have never tested a latch, and don't consider [16] yourself an expert on latches, what is the [17] basis of the opinion about latches being the [18] most lethal defect, as you've testified, you [19] believe?

[20] **MR. MORGAN:** Objection to the form [21] and foundation. Go ahead.

[22] **THE WITNESS:** The National Traffic

Page 163

[1] and Motor Vehicle Safety Act of 1966 does not [2] require the agency to identify the failure [3] mode for a safety defect, just that there be [4] a substantial number of failures in use.

[5] The basis for my statement is that [6] the average safety recall, and the [7] government's conducted over 3,000 to date, [8] involves no deaths and no injuries. And for [9] a defect to have 41 deaths, let alone — you [10] know, 1 death, let alone 41, is an incredibly [11] high number.

[12] So that's why I say it's one of the [13] most lethal. If one goes down the history of [14] defects before the Department of [15] Transportation, I can only think of two [16] others that are higher, one of which is the [17] Ford transmissions that jumped from park to [18] reverse, and the other is the side-saddle gas [19] tanks.

[20] **BY MR. KIENBAUM:**

[21] **Q:** Well, my question, really, [22] Mr. Ditlow, is that part that got into your

Page 164

[1] answer, and that is the word "defect." [2] What's the basis of your opinion that the [3] latch was defective or is defective?

[4] **A:** The basis for my opinion is that [5] the latches on the Chrysler minivans were [6] failing. The hatches were popping open, and [7] occupants were popping out. And we had had [8] 41 deaths associated with the hatches coming [9] open in Chrysler minivans.

[10] And it's not important as to what [11] the particular failure mode is, just that [12] they're failing. And when one compared the [13] Chrysler hatches to the other minivan [14] hatches, the other ones weren't popping open [15] like the Chryslers.

[16] **Q:** Anything else that you base your [17] opinion on, other than what you've just [18] stated?

[19] **A:** Well, 25 years of experience of [20] working before the National Highway Traffic [21] Safety Administration and members of Congress [22] on this legislation and these recall

Page 165

[1] programs.

[2] **Q:** I don't understand that. What does [3] that add to the opinion concerning whether or [4] not a particular latch is defective or not?

[5] **A:** Well, you're asking basis for my [6] opinion, and the Center for Auto Safety has [7] filed more petitions and gotten more recalls [8] on safety defects than any other entity, you [9] know, outside of the National Highway Traffic [10] Safety Administration.

[11] **Q:** And when you file petitions, that [12] means you're advocating a certain cause of [13] action?

[14] **A:** That's right.

[15] **Q:** But that just again restates the [16] fact that you or your organization may have [17] an opinion, and I'm still getting back to the [18] basis of the opinion.

[19] **A:** The basis for the opinion is my [20] experience with the legislation, and looking [21] at — I mean, I personally have looked at the [22] investigatory files and the files of recalls.

Page 166

[1] I mean, I can say to you today that I've [2] looked at over 2,000 investigations and [3] recalls, and I know what goes into the [4] determination by the agency.

[5] And the statutory language is that [6] there be a defect affecting motor vehicle [7] safety, which is the possibility of death or [8] injury in a motor vehicle accident. And [9] there have been seven cases litigated [10] involving motor vehicle safety defects, and [11] when you look at these cases before the [12] courts, they have — for example, the [13] Chrysler —

not the Chrysler, but the [14] Cadillac Pittman arm, there was no deaths, no [15] injuries, and Cadillac's whole defense was it [16] was only in low-speed accidents where the [17] Pittman arm fails.

[18] Firestone recalled 21 million tires [19] for a defect out for which they never figured [20] out what the failure mode was; it's just that [21] the steel belt within the steel-belted radial [22] separated.

Page 167

[1] **Q:** Have you given me all information [2] now that you believe you have for the [3] formulation of that opinion you have stated [4] with respect to the quality or lack of [5] quality of the latch that we've been talking [6] about?

[7] **A:** Well, I also believe that if the [8] other — you know, the paper that would go [9] into that position would be, just look at the [10] investigative report of which they closed the [11] investigation.

[12] And this was a decision that was [13] pressured on the agency by Chrysler [14] Corporation, but that investigative report [15] goes into the comparative strengths of the [16] Chrysler latch versus other latches, what [17] happens in the crash tests. And on the [18] facts, it's right; on the decision, it's [19] wrong.

[20] **Q:** Your opinion is that NHTSA was [21] wrong in its conclusions?

[22] **A:** My opinion is that NHTSA's

Page 168

[1] evaluation of the facts was correct, but [2] NHTSA's decision to allow a service campaign [3] versus a safety recall was a disservice to [4] the American public and to Chrysler [5] Corporation.

[6] **Q:** And what is the basis of your [7] opinion that NHTSA was wrong in that regard?

[8] **A:** Because when you look at the facts [9] of the case, there should have been a safety [10] recall.

[11] **Q:** Do you know anything about the [12] underlying facts of any given accident: In [13] other words, vehicle speed, the angle of the [14] hit, that kind of thing?

[15] **A:** When one looks at the individual [16] facts of the individual cases, no.

[17] **Q:** Do you know anything about the [18] numbers of minivans that may be on the road [19] today compared to other minivans?

[20] **A:** I mean, I'm not sure what the [21] population of the other minivans is, but [22] certainly, Chrysler's minivans are about 4

Page 169

[1] million, the '84 through '95s.

[2] **MR. KIENBAUM:** Counsel, I gather [3] your earlier instruction with respect to the [4] question of work between the Center for Auto [5] Safety and plaintiffs' lawyers would still [6] hold, and you would prohibit me from [7] inquiring into that area?

[8] **MS. MATZZIE:** Right. There's two [9] answers. One, we asked for a stipulation and [10] you refused. And the second is, you went [11] into a line of questioning concerning whether [12] or not the Center for Auto Safety works with [13] plaintiffs' lawyers, and he's already [14] answered that.

[15] **MR. KIENBAUM:** You mean, amicus [16] briefs, that kind of thing?

[17] **MR. VLADECK:** No.

[18] **MR. KIENBAUM:** Does that mean the [19] issue's now open and moot, and I can ask the [20] question whether the statement —

[21] **MR. VLADECK:** No.

[22] **MR. KIENBAUM:** — can be answered

Page 170

[1] or not? Or is that instruction still —

[2] **MS. MATZZIE:** It's been answered. [3] We've been over a few grounds several times. [4] There's nothing added from this sentence.

[5] **MR. KIENBAUM:** All right. Well, [6] let me ask the witness.

[7] **BY MR. KIENBAUM:**

[8] **Q:** Does the Center for Auto Safety [9] assist plaintiffs' personal injury lawyers in [10] issues related to safety?

[11] **A:** No.

[12] **MS. MATZZIE:** Objection. It's [13] asked and answered.

[14] **THE WITNESS:** May I answer it?

[15] **MS. MATZZIE:** Yes, you may answer [16] it.

[17] **THE WITNESS:** No. We do assist [18] plaintiffs' lawyers in product liability [19] lawsuits.

[20] **BY MR. KIENBAUM:**

[21] **Q:** Do you have communications with any [22] plaintiffs' personal injury lawyers as the

Page 171

[1] Center for Automotive Safety?

[2] **MR. MORGAN:** Objection to the [3] foundation.

[4] **THE WITNESS:** Well, just like the [5] Society of Automotive Engineers, we have [6] publications which attorneys buy, both [7] plaintiffs' and defense attorneys.

[8] **BY MR. KIENBAUM:**

[9] **Q:** Have you ever communicated with the [10] organization known as the American Trial [11] Lawyers Association?

[12] **MS. MATZZIE:** Objection. Relevance [13] to this case.

[14] **THE WITNESS:** I have done an [15] interview for one reporter from the American [16] Trial Lawyers Association, just as I did an [17] interview for this intelligentsia which you [18] presented me with.

[19] **BY MR. KIENBAUM:**

[20] **Q:** And that's the only communication [21] you've had with them as an organization?

[22] **A:** Since I have been the director of

Page 172

[1] the Center for Auto Safety, I don't — I [2] mean, I occasionally get calls from the [3] American Trial Lawyers Association reporters [4] about proceedings before the National Highway [5] Traffic Safety Administration.

[6] But beyond that, I'm not aware of [7] anything that we do.

[8] **Q:** The question is, really, are there [9] communications between the Center for Auto [10] Safety and the American Trial Lawyers [11] Association?

[12] **A:** Are there communications?

[13] **Q:** Yes, sir.

[14] **A:** Well, I once went to a Roscoe Pound [15] Forum which I think ATLA sponsored, and I [16] suggested that instead of punitive damages, [17] we have criminal penalties for manufacturers [18] that produced those hazardous products. And [19] neither the manufacturers nor the trial [20] lawyers liked it, but I thought it was a [21] pretty good suggestion.

[22] **Q:** And that's the only communication

Page 173

[1] the Center for Auto Safety has had with [2] American Trial Lawyers Association?

[3] **A:** Since I have become the director — [4] I mean, you have to put some time limit on [5] this. I'm not knowledgeable of what happened [6] before I became the director for the Center [7] for Auto Safety.

[8] In the case of the GM side-saddle [9] pickups, we asked the Association of Trial [10] Lawyers of America to give us records on any [11] case in which they were aware in which a GM [12] gas tank resulted in a lawsuit. And we got [13] that information from them.

[14] **Q:** And your statement is that you [15] never receive requests for assistance from [16] plaintiffs' lawyers in connection with [17] litigation that may be pending at the time?

[18] **MS. MATZZIE:** Objection. [19] Relevance.

[20] **THE WITNESS:** There's a difference

TAB

16

Jimenez, et al. vs. Chrysler

Robert J. Eaton

August 28, 1997

Page 103

the assumption that we will eventually be requested to do a recall."
Q Thank you.
A That's a totally different statement than what we were just talking about, our operating under the assumption.
Q You were assuming -- I tried to use his words in my prior questions but you were assuming back in December of 19 -- strike that.
In December of '94, you were continuing to operate under the assumption that you would eventually be requested to do a recall, correct?
A That's what this says and there's no question that's one of the situations that we were dealing with, but there was also --
Q And did you think about -- strike that.
But if you thought you were going to have to at some point do a recall, did it occur to you that perhaps you should be letting consumers know sooner rather than later that there may be a problem with their car?
A There was no defect. You must understand that. There wasn't any, there isn't any. There was nothing to notify.
Q And, well, NHTSA was going to find a defect if

Page 104

you didn't strike a deal with them, right?
A Absolutely not. 3:44:40
Q Okay. Let me show you Exhibit 21. The title of the document is Minivan Latch Issue Proposed Agreement with NHTSA. Do you see that?
A Yes, sir, I do.
Q In paragraph one, you all got NHTSA to agree that they would deny all Freedom of Information Act requests to place their investigative files including the crash test video in the public record and that the Justice Department would defend any lawsuits seeking to compel production under the Freedom of Information Act; is that correct?
[redacted]
A FOIA. 3:46:00
Q Freedom of Information Act.
A Okay.
Q In other words, you all got NHTSA to agree that they would keep or fight the public in finding out what their crash test video showed, correct?

Page 105

[redacted]
THE WITNESS: That was while the investigation was going on, I assume. Obviously they were ultimately released, so there wasn't -- you know, I don't know.
Q They were released. I think there was a lawsuit to get them, but in any event, are you aware of any deals being struck with NHTSA?
A I do recall -- no, I'm not. I clearly remember that we were continually -- this investigation was hampered by leaks in various sensationalism in the press -- sensationalist press and we wanted all the facts to get out there and obviously all the data so that a proper conclusion could be made, and there isn't any doubt that we would not want to see pieces of the information get out until the investigation was complete, but I'm not familiar with, you know, exactly what happened.
Q Well, this is at the time the investigation was 3:47:33 effectively complete, wasn't it?
[redacted]
A. [redacted]: What is the date?

Page 106

Q [redacted] Well, if you look at the attached document, it's dated March 3, 1995?
[redacted]
THE WITNESS: My recollection is that this investigation wasn't concluded for a long time after that. 3:48:34
Q (BY MR. GERSTEIN): Okay. Well, look at No. 2, paragraph two. Do you see where it says, "NHTSA has agreed that a Chrysler service campaign

Page 107

would fully satisfy all their concerns?"
A Yes.
Q [redacted]
[redacted] 49:11
Do you see where it says, "NHTSA has agreed that a Chrysler service action would fully satisfy all their concerns and they would give full public support to such an effort?"
A Yes, sir, I do.
Q Do you see where it says, "The critical elements that differentiate the service action from a recall (mostly reflected in the" -- attached --

Page 108

"the two attached letters) are as follows." Do you see that?
A Yes.
Q And then it says, "No admission of defect or safety problem." Do you see that? Do you see where it says, "Stated purpose of the campaign - to ensure piece of mind in light of media coverage?"
A I can assure you that was exactly what the safety action was all about.
[redacted]
Q (BY MR. GERSTEIN): Did you ever see this document?
A No, sir, I don't believe so.
Q [redacted]
Were you consulted by executives in your

Robert J Eaton
Chairman of the Board
Chief Executive Officer

CHRYSLER CORPORATION

March 30, 1995

SERGIO

The Honorable John D. Dingell
House Commerce Committee
2125 Rayburn House Office Building
U. S. House of Representatives
Washington, DC 20515

Dear Congressman Dingell:

I want to thank you for your personal involvement on behalf of Chrysler and other auto manufacturers regarding the NHTSA defect investigation process. I believe your oversight of NHTSA has played a significant role in causing NHTSA to alter its mindset as well as its processes in its handling of complex safety investigations. We at Chrysler intend to continue to speak out on this issue and hope you will continue your probing for an improved investigatory process.

I also want to provide you some insight on our recent decision on the minivan latch issue. As you are no doubt aware, with great reluctance we decided on March 27 to initiate a service campaign for our minivan owners, offering them a replacement rear door latch for model years 1984 through 1994. This decision was based solely on our determination that Chrysler minivan owners had become so misled by outrageous media sensationalism of this issue that further delay in adjudicating this investigation with NHTSA would be harmful to the company. It became necessary to put customer concerns first over our absolute insistence that no safety issue actually exists.

I have never doubted that NHTSA's evaluation of the facts in this matter would eventually conclude in their closing the case without an adverse finding. But to reach that conclusion would take many more months during which our exposure to continuing media barrages would not be abated.

It is regrettable that the NHTSA investigative process is wholly deficient in protecting the rights and reputations of manufacturers where there are: (1) large numbers of vehicles involved; (2) complicated technical issues; and (3) post facto and subjective determinations by NHTSA of on-road crashworthiness safety performance. I want to assure you that Chrysler will work diligently for changes to bring fairness to this system. I hope you will continue your invaluable oversight efforts to that end.

Thank you again for your support.

Sincerely,

Eaton
EXHIBIT NO. 25
8-28-97
M. MOORE

Chrysler Corporation
12000 Chrysler Drive

CHRYSLER CORPORATION

Robert J Eaton
Chairman of the Board
Chief Executive Officer

March 30, 1995

SERGIO

The Honorable Michael G. Oxley
Chairman-Subcommittee on Commerce,
Trade and Hazardous Materials
House Commerce Committee
2125 Rayburn House Office Building
U.S. House of Representatives
Washington, DC 20515

Dear Mr. Chairman:

I want to thank you for your personal involvement on behalf of Chrysler and other auto manufacturers regarding the NHTSA defect investigation process. I believe your oversight of NHTSA has played a significant role in causing NHTSA to alter its mindset as well as its processes in its handling of complex safety investigations. We at Chrysler intend to continue to speak out on this issue and hope you will continue your probing for an improved investigatory process.

I also want to provide you some insight on our recent decision on the minivan latch issue. As you are no doubt aware, with great reluctance we decided on March 27 to initiate a service campaign for our minivan owners, offering them a replacement rear door latch for model years 1984 through 1994. This decision was based solely on our determination that Chrysler minivan owners had become so misled by outrageous media sensationalism of this issue that further delay in adjudicating this investigation with NHTSA would be harmful to the company. It became necessary to put customer concerns first over our absolute insistence that no safety issue actually exists.

I have never doubted that NHTSA's evaluation of the facts in this matter would eventually conclude in their closing the case without an adverse finding. But to reach that conclusion would take many more months during which our exposure to continuing media barrages would not be abated.

It is regrettable that the NHTSA investigative process is wholly deficient in protecting the rights and reputations of manufacturers where there are: (1) large numbers of vehicles involved; (2) complicated technical issues; and (3) post facto and subjective determinations by NHTSA of on-road crashworthiness safety performance. I want to assure you that Chrysler will work diligently for changes to bring fairness to this system. I hope you will continue your invaluable oversight efforts to that end.

Thank you again for your support.

Sincerely,

Chrysler Corporation
[illegible] Chrysler Drive

T. G. DENOMME

December 13, 1994

R. J. Eaton
R. A. Lutz
R. R. Boltz
F. J. Castaing
T. R. Cunningham
D. E. Dawkins
L. H. Goldfarb
S. J. Harris
T. J. Kowaleski
A. C. Liebler
C. P. Theodore
G. C. Valade

Attached is the agenda for the Minivan Latch meeting scheduled for 3 p.m. today in the Keller Building Conference Room A.

T. G. Denomme

/bw

Eaton
EXHIBIT NO. 15
8-28-97
M. MOORE

Post-it™ brand fax transmittal memo 7671 | # of pages ▸ 2

To KOWALESKI	From DENOMME
Co.	Co.
Dept.	Phone #
Fax # 8-776-7947	Fax #

DOCUMENT PRODUCED PURSUANT TO A PROTECTIVE ORDER IN JIMENEZ, SERGIO V. CHRYSLER

REDACTED DOCUMENT

MINIVAN LATCH ISSUES
AGENDA

DECEMBER 13, 1994

Topic	Discussion Leader	Time
• Opening Comments	Denomme	5 minutes
• Update Since Last Meeting	Dawkins/Goldfarb	10 minutes
• Report on Latch Status for Field Campaign	Theodore	10 minutes
[redacted]	[redacted]	[redacted]
• Review of Communications Plans for a NHTSA Confrontation	Liebler	30 minutes
• Review of Focus Group Research	Liebler	10 minutes
• Discussion of Combined Offer to Replace/ Confrontation Strategy	Denomme	10 minutes
• Political Strategy	Liberatore	10 minutes
• Business Decision	Group	20 minutes
		1 hour, 50 minutes

12/13/94

DOCUMENT PRODUCED PURSUANT TO A PROTECTIVE ORDER JIMENEZ, SERGIO V. CHRYSLER

T. G. DENOMME

December 9, 1994

R. J. Eaton
R. A. Lutz

Re Point #1 ... we've been talking to The Detroit News today re holding their latch story. Bud has worked out an arrangement whereby they will not run the story this weekend and we will agree to give them a one-day lead if we decide to do a customer-friendly action only (a voluntary recall).

If we decide to take on NHTSA, they understand that we will need to involve all media in that decision.

It should be noted, however, that if there are more leaks, or someone else breaks this story, then the News will go with theirs.

TGD:bw

DOCUMENT PRODUCED SUBJECT TO A PROTECTIVE ORDER IN JIMENEZ V. CHRYSLER

Eaton
EXHIBIT NO. 14
8-28-97
M. MOORE

REDACTED DOCUMENT

Confidential and Privileged

T. G. DENOMME

December 9, 1994

R. J. Eaton
R. A. Lutz

MINIVAN LATCH MEETING

A preview of next Tuesday's meeting:

1. Bad News ... Yesterday we received a call from Bryan Gruley (Detroit News Washington Bureau) who told us he and Bill Vlasic are working on a story for this weekend on the "raging debate within Chrysler on whether to recall the vans or take on NHTSA". This story, which may go on the Gannett wire (USA Today) will generate customer and dealer concerns, and could force NHTSA to dig in. Don't know the source, but the fact that their Washington Bureau got on it suggests either a NHTSA or a Consumer Advocacy source.

2. NHTSA Situation ... There was little discussion on our technical presentation last Monday. The consensus is that the new data we presented has bought us a little time ... there will probably be another technical session to discuss NHTSA's reaction to our data ... but it's unlikely we have changed their minds. Accordingly, we will continue to operate under the assumption that we will eventually be requested to do a recall.

3. Latch Fix ... Chris Theodore will update us. Because we have chosen not to contact external suppliers, our cost/timing estimates are very rough. But Chris will likely report that we could have some quantity of latches available for '91 to '94 models by early spring, and the new latch for the pre-'91 models in about nine months. I do not know where we stand on costs.

4. Take On NHTSA Strategy ... Tom Kowaleski will take us through a "script" for a media conference laying out our case. Bud Liebler will review the ads developed in conjunction with a decision to fight a recall. We will also review dealer/customer communication materials.

5. Research ... We are doing some focus group testing of the take-on-NHTSA approach. No one has seen the results yet, but early indicators are that customers "tune out" statistical arguments about accidents, fatalities, latch pull tests, etc., and focus on "what's Chrysler going to do to address customer concerns". There is no doubt that Chrysler has a special image and relationship with minivan customers when it comes to safety.

6. A Third Approach ... In addition to the voluntary recall path and the take-on-NHTSA path, a third path melding elements of a voluntary recall and a take-on-NHTSA approach will be discussed. Essentially, we would seize the high ground by going out with an offer to replace the latch for any of our owners who request a replacement (note this wording ... it is much softer and less urgent than the language NHTSA insists on under their recall procedure) and, at the same time, tell NHTSA to "pound sand". The obvious benefit of this approach is that we address our customer concerns without admitting to a defect (because there is no defect) and simultaneously engage NHTSA in the fight over principle.

DOCUMENT PRODUCED PURSUANT TO A PROTECTIVE ORDER IN THE MINIVAN LITIGATION

REDACTED DOCUMENT

[redacted] I should also point out that we have several other important cases under investigation by NHTSA, including minivan brakes, that we need to keep in mind before we engage them in a fight.

7. [redacted]

8. Recommendations ... There continues to be a divided house on what we should do once we know that NHTSA will send us a letter.

   - Sales/Marketing ... Wants us to address customer/dealer concerns and prefers a voluntary field campaign to a public fight on principle.
   - Public Relations ... Agrees with Sales.
   - Engineering ... Prefers we take on NHTSA.
   - Regulatory Affairs ... Prefers we take on NHTSA (but is supportive of the third alternative described in point #5).
   - [redacted]
   - Washington Office ... [redacted] but also sees some advantages to the third alternative.

9. Final Point ... Rob Liberatore makes the point that, regardless of what course of action we take, we should mount an aggressive effort in Washington to prevent the adverse use of bureaucratic power within NHTSA, specifically their funding from Congress, the process which allows NHTSA to design tests for the public record that play to the media and trial lawyers before ruling on a defect, the lack of objective criteria in determining whether a recall request is to be made, and the very fact that they can request a recall before establishing that a defect exists. I could not agree more.

If we want to use political pressure to try to squash a recall letter, we need to go now. We cannot expect to be successful if we don't activate until we are officially notified that a letter is coming. Of course, the risk of early action is that it may preclude NHTSA from exercising a close-the-case option.

T. G. Denomme

TGD:bw

DOCUMENT PRODUCED PURSUANT TO COURT ORDER IN JIMENEZ V. CHRYSLER

FREE AT NEWSSTANDS
TRY OUR CLASSIFIEDS
REACH A GREAT MARKET

Oakland Tech News

OUR 13TH YEAR
NEWS & ADVERTISING
CALL (810) 879-8200

VOL. 13, NO. 9 | OAKLAND COUNTY'S AUTO INDUSTRY AND BUSINESS NEWSPAPER | MARCH 6, 1995

CUSTOM FIT

The Detroit Transportation Club hosted a U.S. Customs Service Special Agent at their February luncheon — he spoke on customs fraud, its application to shippers and the responsibilities of all parties involved.

See CUSTOMS, page 2 ➤

DEALERSHIP LOYALTY

Along with improved customer satisfaction, that's what Chevrolet is trying to promote with its new Career Builders program that honors salespeople who stay at dealerships for more than three years.

See CHEVROLET, page 6 ➤

MOTOWN HOEDOWN

The Motown Museum hosted its annual fund-raising dinner and dance last week to help with renovation of the old Hitsville USA studio on West Grand Boulevard in Detroit's New Center Area.

See PARTY, page 6 ➤

CLEAN AND CLEAR

Orbital Engine Co. has long said it would provide automakers with an alternative to the four-stroke engine with its two-stroke, however, U.S. emissions standards have stood in the way of the in-

EATON ATTACKS FEDERAL REGULATIONS

By Scott Roush
Staff Writer

Chrysler Corp.'s Chairman Robert Eaton wrapped up the 1995 SAE International Congress and Expo with a speech that criticized the federal government for regulations stifling the growth of the auto industry.

From voluntary recalls and workplace streamlining to the average cost of today's vehicle, Eaton questioned the government's role in regulating business during his "Engineering for Value" presentation.

But Eaton did approve of what some of the government is doing. The Chrysler boss praised House Speaker Newt Gingrich and other Republicans' attempts to reduce some of the bureaucracy in Washington through the "Contract with America."

Eaton discussed how the automotive industry has reduced its workforce since 1950 and how the federal government has failed to reduced its workforce over the same time period. This, according

See EATON, page 4 ➤

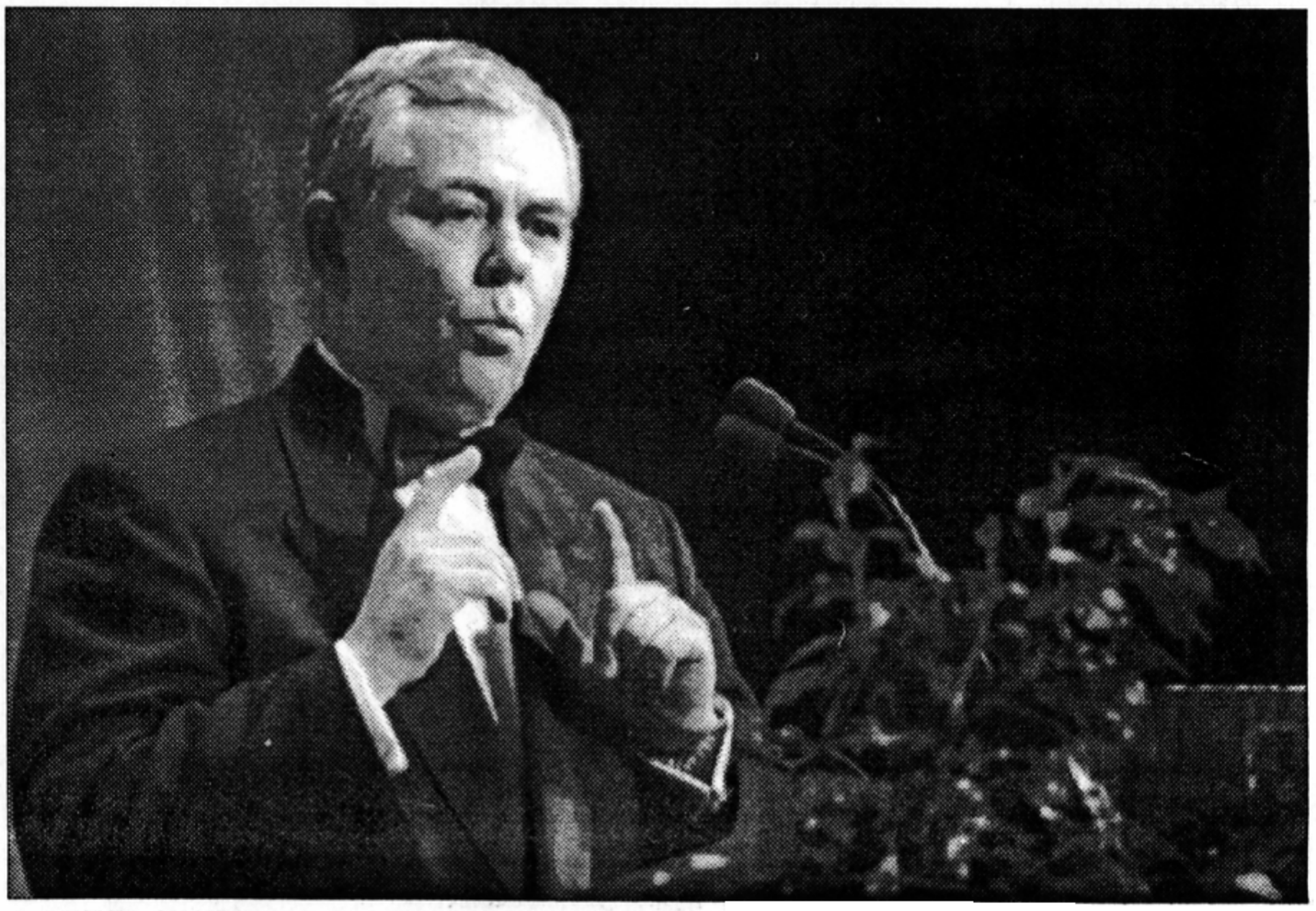

CHRYSLER CHAIRMAN Robert Eaton's speech at the SAE Congress and Expo banquet at Cobo Center was critical of the number of industry regulations coming from Washington.

science and technology on March 6 from noon -1 p.m. Call (810) 370-3574.

QUALITY WORKSHOPS A nine-week workshop, Improving Productivity Through Statistical Quality Control, starts March 20, from 6 -9 p.m. at Oakland University. Another workshop at OU, Improving Customer Satisfaction Through Process Control and Quality Planning, starts March 21 from 6 -9 p.m. Call (810) 370-3120.

"LOVE LETTERS" St. Dunstan's Guild of Cranbrook presents "Love Letters" by A. R. Gurney March 10, 11, 17 and 18. This performance piece delivers letters exchanged over a lifetime between two people who grew up together, went their separate ways but continued to share confidences. The show starts at 8 p.m. in St. Dunstan's Playhouse in Bloomfield Hills. Call (810) 644-0527.

VOLUNTEERS NEEDED The Oakland County Retired and Senior Volunteer Program (RSVP) seeks volunteers 55 years and older to become involved with community agencies who need assistance. Varied opportunities are available at schools, hospitals, libraries, human service agencies, and cultural institutions throughout Oakland County. Contact Linda Kaniewski at (810) 333-3716 ext. 115.

CHILD SAFETY "Northwest Troy Partnership Talks Safety" will be presented March 8, 7 -9 p.m. at Hamilton Elementary School on Northfield Parkway in Troy. Presentations by members of the Troy Police Department will include: home security, bike safety, how to use your police department, K-9 officers, child safety and personal safety. Admission is free. Call (810) 740-0431.

MUSICAL CELEBRATION Inspired by stories from and about the AIDS Memorial Quilt, "Quilt, A Musical Celebration" fills the theater with images of laughing, living, leave-taking and love. The show takes the stage March 10 and runs for three consecutive weekends. Cal (810) 370-3013.

CANCER PROGRAM Crittenton Hospital in Rochester and the American Cancer Society are sponsoring a four-week "I Can Cope" program that began Feb. 22 and continues for four consecutive weeks. "I Can Cope" will be

tax strategies. Featured speakers include Peter Bewrchy, Richard Falck and Davis Senatore, financial consultants. The seminars will take place at the Columbia Center in Troy across from the Troy Marriott. Call (810) 227-1931.

"ROYAL TOMBS OF SIPAN" This heralded exhibit will be on display at the Detroit Institute of Arts from now through April 30. Tomb robbers unearthed treasures from a pyramid near Sipan, Peru, and flooded the international art market with gold and silver artifacts. The exhibit features exquisite gold and silver jewelry, semi-precious stones and other artifacts excavated from the richest tombs ever explored in the Americas. Call (313) 833-2323.

BIRDS OF PREY Join an expert ornithologist for a talk featuring live Michigan wildlife March 14, 7 -8 p.m., at Edsel and Eleanor Ford House. Special guests could include a Barn Owl, Red-tailed Hawk and American Eagle, among others. Suitable for adults and children 6 and older. Admission is $3. Call (313) 884-4222.

AUTOMOTIVE MAGNESIUM The International Magnesium Association is sponsoring an educational seminar on magnesium in automotive applications, Apr. 4, 8 a.m. -4 p.m., at Laurel Manor, 39000 Schoolcraft in Livonia. There is no charge for attending the seminar. Form reservations call (703) 442-8888.

RAPID PROTOTYPING Register now for the Rapid Prototyping & Manufacturing '95 Conference and Exhibition, May 2 -4, at the Hyatt Regency in Dearborn. The event, sponsored by the Society of Manufacturing Engineers, will feature 60 exhibitors and 40 conference presentations. Keynote speaker is Mary L. Good, undersecretary of technology at the U.S. Department of Commerce. For more information call 1-800-733-4763.

MANAGING DIVERSITY The University of Michigan-Dearborn's Center for Corporate and Professional Development helps you update your managing skills. The CCPD will be offering a course on "Diversity: Awareness & Understanding" March 20 and 21, 8 a.m. -5 p.m. The cost for this interesting program is $536 per person. Call

Eaton Says Governmental Regulations Negatively Impact Industry's Progress

From page 1

to Eaton, just one way the auto industry has streamlined and the government hasn't.

In 1978, the auto industry was at its peak employment at 1 million workers. That same year the federal government employed 2.8 million civilians. "Today the automotive industry has reduced its workforce to 575,000," he said. "What happened to those 2.8 million federal employees in the meantime? They grew by 100,000 (almost the size of Chrysler Corp.)."

Eaton also talked about process. "We figured out a few years ago that managing the process makes a lot more sense than just trying to manage the outcome," he said. "That's how we cut our workforce so much and got so productive."

Eaton continued by saying that no industry is more heavily regulated than the auto industry. He added that because the industry is so visible, there is no better target when the government pursues a crusade like voluntary recall.

Voluntary recall is negative for the industry, Eaton said, because of the bad public relations that go with a product recall.

"If you do what the government asks you to do, in the eyes of the public you must have a faulty product," he said. He referred to the dispute General Motors had concerning its pickup trucks as a prime example of where the automaker faces a no-win situation in public opinion.

Chrysler might be in a similar situation with one of its vehicles. Reports have criticized the car company for flawed rear door latches on its best-selling minivans from 1985 -94.

"The cost and the risk of defying them are too great for many companies to even contemplate," Eaton said of the agencies who regulate the industry.

Regardless, today's auto workers are more productive than in the past because of better management according to Eaton. In 1978, the industry produced 13 vehicles per employee. This year that figure is 21 vehicles per employee.

"We can continue this process," Eaton said of the improved production.

The federal government announced that the average price of a 1995 vehicle rose to approximately $20,000. Eaton said the government failed to include incentives when it calculated those figures, but that number could soon be reached due to government regulations.

"The public mood is decidedly anti-Washington, and that means the appetite for more rules and regulations is just about gone," Eaton said.

The auto industry itself needs to improve the affordability of cars, but with governmental interference it will be difficult to promote "Engineering for Value" according to Eaton.

"The future profits have to come from the product instead of the customer," he said. "Costs have to be engineered out, and they have to come out without compromising product integrity."

"I like religious fanatics, Sims—especially when they worship me."

TAB

17

STATE OF MICHIGAN

IN THE CIRCUIT COURT FOR THE COUNTY OF OAKLAND

CHRYSLER CORPORATION, a Delaware corporation,

Plaintiff,

-vs-

No. 94-489177-CZ
Hon. David F. Breck

PAUL SHERIDAN,

Defendant./

The deposition of ROBERT A. LUTZ,

taken pursuant to the Michigan General Court Rules before Rose Ann Zaidan, a Notary Public in and for the County of Oakland, acting in the County of Washtenaw, State of Michigan, at 2101 Hubbard Drive, Ann Arbor, on Friday, June 4, 1998, commencing at or about the hour of 9:20 o'clock A. M.

APPEARANCES:

KIENBAUM, OPPERWALL, HARDY & PELTON, P.L.C.,
BY THOMAS G. KIENBAUM, ESQ., (P15945),
and ROBERT B. BROWN, ESQ., (P51378),
325 South Old Woodward Avenue, Birmingham, MI 48009, 248-645-0000, appearing on behalf of the Plaintiff.

MAZUR, AMLIN, MORGAN, MEYERS & KITTEL,
BY COURTNEY E. MORGAN, JR., ESQ., (P29137),
and MICHAEL S. MAZUR, ESQ., (P29137),
1490 First National Building, Detroit, MI 48226, 313-961-0130, appearing on behalf of the Defendant.

ALSO PRESENT: Paul Sheridan

- - -

Rose Ann Zaidan, CSR-2217, RPR

R. A. ZAIDAN & ASSOCIATES, INC.
248-643-4740

press, which is a notoriously unreliable source.

Q. (BY MR. MORGAN) Okay. Let me show you what I've marked as Exhibit 3 and ask if you can identify that.

MR. KIENBAUM: Let me just note that this appears to be a document under protective order in the Jimenez (JIM-e-nez) --

MR. BROWN: Jimenez (HIM-e-nez).

MR. KIENBAUM: -- Jimenez (HIM-e-nez) case and I have no idea what the resolution of the Court's protective order is, but, you know, I...

MR. MORGAN: The document has in fact been published by the press. It was shown on CBS news on January 7, 1998. I can assure you, Mr. Kienbaum, I am legitimately in possession of this document.

MR. KIENBAUM: I said nothing about your possession. I'm only suggesting that if the press does something, that it doesn't necessarily mean that we as lawyers should not still be considerate of the order, whatever it may have been. That's all the point I'm making.

Secondly, we are getting squarely obviously into the issue that's precluded by the Court's order, so I don't know where we're going, but I suspect you're going to ask the question.

Q. (BY MR. MORGAN) My question is are you familiar with the document, sir?

A. I believe I have seen this document before.

Q. Okay. Did you know that NHTSA and Chrysler had agreed to endeavor to prevent the public from having access to their investigative files regarding the minivan latch?

MR. KIENBAUM: Let's have that one back please, could we?

(Whereupon the record, as requested, was read by the reporter).

A. Well, that's -- I would not say yes to the question characterized that way.

Q. (BY MR. MORGAN) The first bullet point under Crash Test Video and Public Record states that NHTSA has agreed they will deny all FOIA requests to place their investigative files, including the crash test video, on the public record and that the Department of Justice will defend any lawsuits seeking to compel production under FOIA.

A. Yes, that paragraph is there.

Q. And is that paragraph accurate? Did Chrysler and NHTSA agree to do that?

A. That's what this says.

MR. KIENBAUM: Well, have you asked the witness --

Q. (BY MR. MORGAN) Do you think it's proper?

MR. KIENBAUM: Have you asked the witness whether or not he knows what this is, knows anything about it, or are you simply asking him to read the document?

MR. MORGAN: I believe the witness has indicated some familiarity the document.

Q. (BY MR. MORGAN) Am I correct, sir?

A. Yes, I believe I've seen the document before.

Q. And this was a document that was presented to you while you were the Chief Operating Officer at Chrysler?

A. Right.

Q. And a member of the Executive Committee, correct?

A. That's correct.

Q. And did you know -- you learned at that time, sir, that NHTSA and Chrysler had agreed to deny all FOIA requests to place their investigative files, including the crash test videos, on the public record?

A. That is correct.

Q. And that the Department of Justice, funded by the taxpayers, would defend lawsuits seeking to compel

production under FOIA?

A. Where does it say --

Q. (Interposing) All right. I'll remove that clause and people can make their own conclusions about who paid the Department of Justice lawyers to do what it is they're doing.

MR. KIENBAUM: You're asking the witness now whether that was what this paragraph says?

MR. MORGAN: No, I'm asking him to affirm the fact that that agreement did take place and the Department of Justice did undertake to do those things.

A. All I really recall is that we came to a satisfactory resolution with NHTSA on how we were going to handle the action that they wanted to see taken on minivans and coinciding that with what we felt to be our legitimate interests.

Q. The crash test video referred to in that paragraph, is that the one done by NHTSA, the crash test, on the minivan?

A. I assume, yeah.

Q. All right. That's the one where the dummies, or the rear liftgate is seen opening and dummies are seen exiting the vehicle through the rear hatch opening?

MR. KIENBAUM: Mr. Morgan, we're getting

TAB

18

Inter Company Correspondence

To—Name & Department	Telephone	Date
	776-2909	January 27, 1993

From—Name & Department		CIMS Number
Please See Below		
R. A. Winter	General Product Manager - Minivan Operations C.T.C.	482-08-02

Subject: **Minivan Safety Leadership Team (SLT)**

TO:
D.P. Bostwick
T.M. Creed
D.E. Dawkins
R.L. Franson
M.R. Levine
T.S. Moore
J.W. Rickert
P.M. Rosenfeld
S.T. Rushwin
F.I. Sanders
R.A. Sarotte
C.P. Theodore
S.A. Torok

Safety has been an important consideration among Minivan buyers, and Chrysler has enjoyed a leadership position with the implementation of driver's air bag and child seats. The competition has passed us in 1993 by meeting passenger car safety standards, but we will retake the lead in 1994 with passenger side air bags.

In order to maintain our leadership position in this segment we need to provide a vehicle that has the most important safety attributes, and to that end the Minivan Safety Leadership Team is being formed. The purpose of the team is to re-establish Chrysler's advertisable safety leadership position, with particular emphasis on the NS-Body. The general format will focus effort in the areas of "Accident Avoidance", "Accident Survival" and other security issues, and the team will avail itself to all sources of expertise/assistance.

Attached is the current membership listing. Your support/awareness of this activity will enhance the ability of the team in this extremely important task. Your comments are welcome.

R.A. Winter

/sem
RAW#8\sltmemo

Attachment

NS-BODY
SAFETY LEADERSHIP TEAM (SLT)

- **Background**

  - Through its aggressive implementation of the air bag, and other safety related features, Chrysler enjoyed an advertisable safety leadership position through the 1990/1991 timeframe.

  - Current and projected competitive activity in the area of safety will erode our leadership position to that of parity, especially in the minivan segment.

- **Purpose/Mission Statement**

  - Accurately assess our current and projected status in the area of safety, using the following as a basis for discussion:

    ▹ 1995 AS-Body exit levels

    ▹ Documentation/specification of regulatory compliance plans

  - Define specific additional requirements/actions to re-establish an advertisable leadership position.

  - Focus will be on the NS-Body and the minivan segment, but SLT activity will be formatted to be transferrable/accessible to other platforms.

  - Monitor safety innovations.

  - Monitor competitive activity.

  - Estabilish/monitor consumer acceptance.

- **Format**

  - It is proposed that the SLT examine the safety leadership issue in the context of the following categories:

    ▹ Accident Avoidance
      - ABS
      - Traction Control/Enhancement
      - Speed Dependent Steering
      - Active Suspension
      - Driver Information Enhancement

- **Format** (continued)

  - ▹ Accident Avoidance (continued)
    - – Exterior Lighting/Signaling
    - – Mirrors/Visibility
    - – Back-up Alert

  - ▹ Accident Survivability
    - – Air Bags (Active)
    - – Occupant Restraints (Passive and Active)
    - – Crash Management
    - – Crash Intrusion
    - – Bumper Integrity
    - – Side Impact
    - – Roof Crush
    - – Rollover
    - – Seat Back Strength
    - – Headrests
    - – Glass Retention

  - ▹ Other
    - – Anti-theft
    - – Security Systems
    - – Mechanical Reliability
    - – Communications
    - – Comfort (anti-fatigue)
    - – IVHS

- **Organization/Membership**

  - Minivan Operations (Chair)
  - Safety Office
  - Engineering
  - International Operations
  - Liberty
  - Marketing
  - Sales
  - Design Office
  - Competitie Information Activity

  - ▹ Additional organization involvement will occur as appropriate.

- **Other**

  - To be effective, the SLT will require <u>empowerment</u> via executive level recognition of the SLT mission, and resultant dedication of staff support.

  - Meeting time tentatively set to alternate with existing Minivan Complexity Team on Tuesdays, 8:15 - 9:00 a.m.

  - Initial agenda priority will be review of the NS-Body ABS strategy.

NS-BODY
SAFETY LEADERSHIP TEAM (SLT)

MEMBERSHIP

Organization	Representatives	CIMS	Telephone	Telefax
Minivan Operations*	Paul V. Sheridan	482-08-02	776-4824	776-2261
Safety Office	Ronald S. Zarowitz	415-03-21	876-1126	822-5069
Engineering	TBD			
International Operations	Gregory A. Blindu	415-03-05	876-5983	876-4752
Liberty	TBD			
Marketing	William H. Hines (Dodge) Mark W. Clemons (C/P)	414-04-40 414-04-35	876-5523 876-3763	822-6957 822-6957
Sales	James L. Boeberitz	414-05-29	876-3942	822-7431
Design	TBD			
Competitive Information Activity	Michael T. Delahanty	414-02-16	876-1464	876-4241

*Chair

TAB 19

IAN
MER
knocks
festival
Page B-1

LIVING

JAM
TIME

Enjoy fruits
of your
Pa

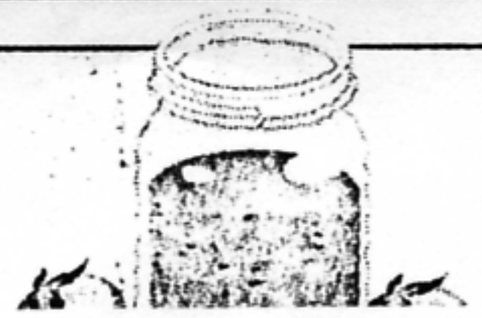

Monday
June 22, 1992

INDEX

Cloud

Area-Metro
Bridge
Classified
Comics
Crossword
Editorial
Entertainment
Farm

70 The Saginaw NEWS

Mid-Michigan traffic kills three

Two children of CMU psychology professor among victims

BY DAVID OSBORN
News Staff Writer

MOUNT PLEASANT – Central Michigan University psychology professor Timothy S. Hartshorne teaches his students how to help children cope with tragedy.

Today, his home is the classroom.

Hartshorne, 43, had left the Mount Pleasant Summer Festival about 5:30 p.m. Saturday with his wife, Nancy S., and five children when his 1985 mini-van collided with another vehicle.

The impact threw their daughter, Katherine, 15 months, and Michael, 8, from the van, killing them.

The children were among at least three mid-Michigan fatalities this weekend. Robert C. Rutledge, 40, of Sanford, died when a car struck him as he walked about 2 a.m. Sunday near U.S. 10 in Isabella County's Wise Township.

Hartshorne's three other sons were injured in the Mount Pleasant crash. Joshua K., 11, and Nathan S., 9, were in good condition today at Central Michigan Community Hospital and doctors treated Jacob, 3, a spokeswoman said.

Jacob is deaf, visually impaired, and suffers from eating disorders, the father said.

"That's my area, therapy and children. But you can learn all that stuff and you teach it to other people, but it's different when it's you," said Hartshorne, who began teaching at CMU three years ago.

Hartshorne was driving east on Lincoln and a vehicle driven by John J. Guzman, 17, of Shepherd, was heading south on Kinney when they collided, said Julie L. Parks, a clerk with the Mount Pleasant Police Department.

Hartshorne recalled the impact, spinning, and then the van crashing on its side.

After the vehicle came to a halt, Jacob was crying and Joshua and Nathan were moaning, he said.

"I saw no sign of Michael and Katie," he said, noting the two were wearing seat belts.

Nancy Hartshorne received minor injuries.

The family had piled into the mini-van that day to attend the Summer Festival, where the children enjoyed carnival rides.

On Saturday Katherine was 15 months old, and it marked the first time she walked on her own, Hartshorne said.

"That was exciting," he said.

Michael enjoyed playing soccer, baseball and hockey and was a sociable child, Hartshorne said.

"He was very outgoing. He would pick flowers in our yard and take them to neighbors we didn't even know."

Hartshorne has set up counseling for himself and his family.

"It's the worst thing that has ever happened to me – or could ever happen to me," he said.

Fire safety efforts earn award

BY FRED E. GARRETT
News Staff Writer

A St. Charles resident's efforts to make mailbox addresses more visible has earned him the stamp of approval from the Michigan State

Charles and the townships of St. Charles, Swan Creek and Brant.

"I was totally surprised," said Morse, 510 Christy Drive. "I thought I had gone to Clare to make a presentation on MAIL.

"I'm proud and honored. But fire

mailboxes.

"Dave now is talking all over the state about mailboxes," said Rick Bolly of Plymouth, presi-

TAB 20

Thursday, January 17, 1991 Vol. 11, No. 2

CHRYSLER CORPORATION

Times

A weekly newspaper for Chrysler employees and their families

Lutz named Chrysler Corporation President

Chrysler reorganizes to promote teamwork

Chrysler made a series of organization changes Jan. 14, most of which are designed to strengthen the company's commitment to the platform team concept.

• Robert Lutz has been named President of Chrysler Corporation. His former title, President of Chrysler Motors, as well as the title of Chairman of Chrysler Motors, have been discontinued. Lutz is responsible for all North American automotive activities including sales, marketing, product development, procurement and supply, and manufacturing. He is also responsible for Acustar, Chrysler's parts subsidiary, and Chrysler operations in Mexico.

In addition, four general managers were appointed to coordinate all product development and market and consumer inputs for both current and future product lines. The four appointees are all currently company vice presidents and will retain their present areas of responsibilities in addition to their new general manager duties. All four executives report to Lutz.

• Ronald Boltz has been appointed General Manager—Small Car Operations and con-

see **Platform,** *page 4*

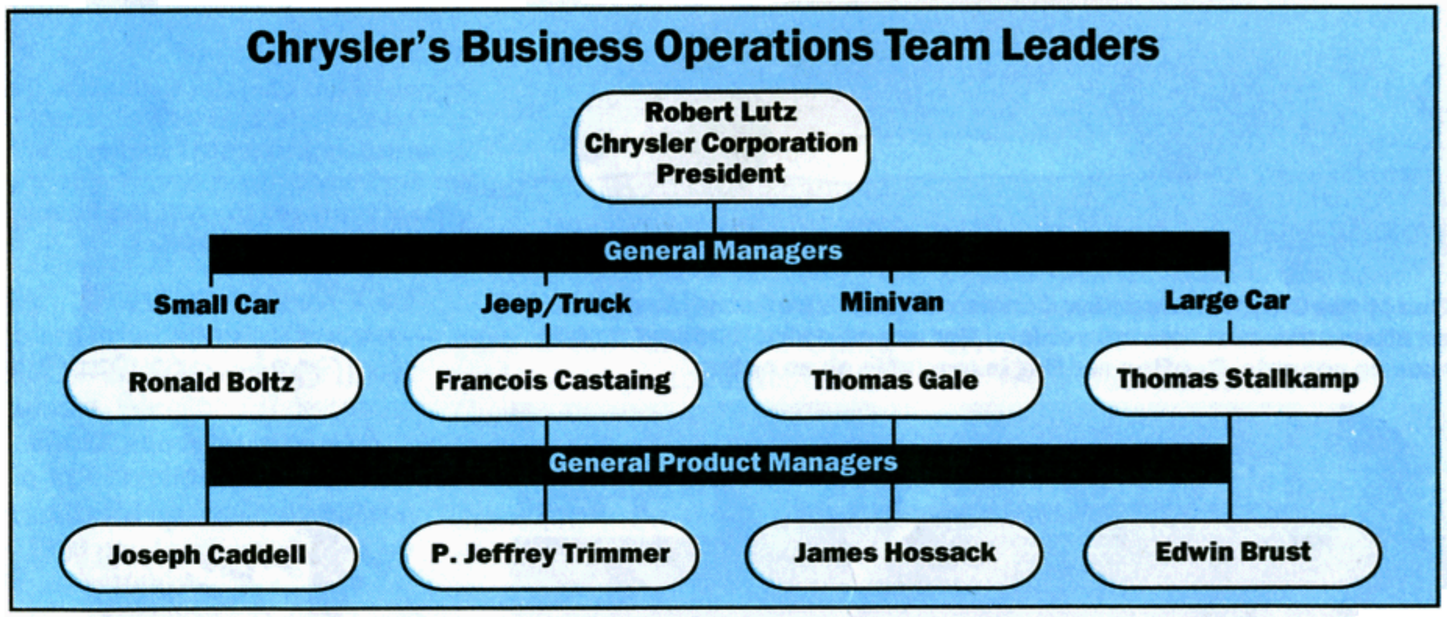

Briefs

Gulf crisis prompts security measures

Chrysler Security and Fire Prevention departments have increased precautionary security measures at U.S. manufacturing plants and major office locations in response to the Persian Gulf situation and the possibility of terrorist attacks.

Many of the preparations may not be noticeable, but increased personal identification and vehicle checks at traffic gates may result in delays while entering or leaving Chrysler facilities.

The Security Office also asked that employees notify local security personnel if they hear or notice anything out of the ordinary—for example, a package in an unusual location or unknown people or vehicles loitering around plant entrances.

International travel curtailed

Chrysler Special Security Operations issued a travel advisory suspending all international business travel with the exception of

brand-name drug whose patent has expired. A generic drug is sold under a common or "generic" name for that drug, not the brand name. Generics often become available for sale shortly after the patent on the brand-name product expires. And generic drugs usually cost less than brand-name drugs, yet work just as well.

There are more than 200 manufacturers of generic drugs in the United States. Some companies make only generic drugs while other companies make generic drugs.

If you have a specific question about your prescription, ask your pharmacist. In about two out of three cases, when a generic drug is available, the pharmacist will dispense a generic drug rather than a brand-name drug. This is because generic drugs cost less and save patients money, and they usually achieve the same medical results.

If you're concerned about the safety of your generic product, ask your pharmacist. Pharmacists receive bulletins from the Remember, if you have a prescription that you are supposed to take until it is gone, do not stop taking it unless you have checked with your physician or pharmacist.

If your doctor determines it is medically necessary for you to receive a brand-name drug, he or she will write "DAW" (dispense as written) on the prescription. If your doctor does not specify DAW, and you request the brand-name drug from the pharmacist, you will be responsible for the difference in cost.

Market share ceiling sought

continued from page 1

increase in Japanese U.S. transplant production in recent years," Iacocca said.

"With their U.S. transplant factories producing 1.5 million units annually and growing, and with Japan's market share in the United States at 30 percent and growing, now would be an appropriate time for Japan to agree to a total market share restraint that would include both transplant and imported units.

"This approach would allow continued growth in U.S. tra plant operations while Japan built-up imports, which cont no U.S. added value and supp no U.S. manufacturing jo would decline," Iacocca said.

Following Japan's annour ment on import restraints, 1 members of Congress release letter they sent to Japan's Pri Minister Toshiki Kaifu expre ing disappointment in Japa response to the Gulf crisis a urging "meaningful" restrai on auto exports. Ford Chairn Harold Polling also called Japan to roll back its exports.

Platform team concept expands; general managers named

continued from page 1

tinues as Vice President—Product Strategy and Regulatory Affairs.

- Francois Castaing has been appointed General Manager—Jeep/Truck Operations and continues as Vice President—Vehicle Engineering.
- Thomas Gale has been appointed General Manager—Minivan Operations and continues as Vice President—Product Design.
- Thomas Stallkamp has been appointed General Manager—Large Car Operations and continues as Vice President—Procurement and Supply.

Chrysler Chairman Lee Iacocca said, "The platform team concept we launched for the development of the new LH program is succeeding beyond our most optimistic expectations.

"The cross-functional teamwork idea is working so well that we decided to apply it to all of our product lines and broaden it to include not only the product development process, but also the important market and consumer inputs necessary to bring world-class vehicles to market.

"These new general managers," Iacocca added, "will be positioned to pull it all together because that's what it's going to take to compete in the '90s—great products totally in sync with our customers."

The new Business Operations activities will be organized on a cross-functional team basis and will incorporate Chrysler's existing platform team functions, expanded to include representatives from planning, sales, marketing, service and consumer activities.

Each of the team managers will have a general product manager:

- Edwin Brust has been appointed General Product Manager—Large Car.
- Joseph Caddell has been appointed General Product Manager—Small Car.
- James Hossack has been appointed General Product Manager—Minivan.
- P. Jeffrey Trimmer has been appointed General Product Manager—Jeep/Truck.

Chrysler also announced that Thomas Denomme has been named Executive Vice President—Corporate Staff Group. He had been Vice President—Corporate Planning and External Affairs.

Effective with this change, Anthony St. John, Vice President—Employee Relations, and Gino Giocondi, Vice President—Quality and Productivity, will now report to Denomme. They had reported to Lutz.

Denomme's responsibilities include Strategic Planning, Communications, Civic and Government Affairs, and Washington Affairs, in addition to Employee Relations and Quality and Productivity.

Concurrently, Corporate Economist Donald Hilty is reassigned from Denomme to Chrysler Corporation Vice Chairman R. Steve Miller Jr.

Times

Chrysler Times is published by Communication Programs, a department of Chrysler Corporate Communications, for all Chrysler employees, retirees and their familie Comments or questions should be addressed to:

CHRYSLER TIMES
Allan Nahajewski, Editor
Pamela M. Gross, Associate Editor
CIMS 416-13-06
Highland Park, MI 48288-1919

News updates are available daily through the *Chrysler Employee New Daily* system. Call tieline 876-2345 or, via computer, touch PF1 on the InfoCenter Main Menu.

Chrysler Times is printed on recyclable paper.

TAB

21

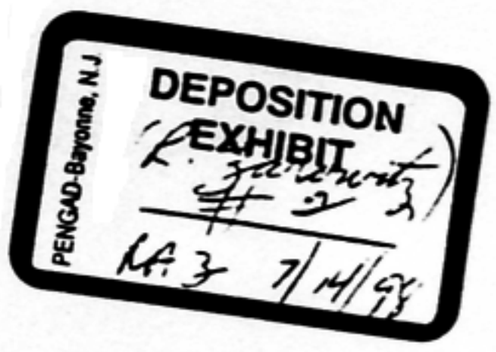

NS-BODY
SAFETY LEADERSHIP TEAM (SLT)

	Members	CIMS	Telephone	Telefax
	Gregory A. Blindu	415-03-05	876-5983	876-4752
	James L. Boeberitz	414-05-29	876-3942	822-7431
▹	Mark W. Clemons	414-04-35	876-3763	822-8984
	Mark W. Crossman	482-02-13	776-4757	776-2250
▹	Michael T. Delahanty	483-10-08	776-6742	776-2822
▹	William H. Hines	414-04-40	876-5523	822-6957
	Neal E. Hoxsie	482-12-02	876-4898	776-2261
▹	Harlan E. Kifer	483-46-10	776-1258	776-2048
▹	Frank O. Klegon	482-12-01	776-2843	776-4516
▹	Kenneth S. Mack	463-00-00	880-5222	880-5234
	Richard Medel	233-02-22	833-2800	833-2792
▹	Fred W. Schmidt	482-10-02	776-4827	776-2261
▹	Paul V. Sheridan	482-08-02	776-4824	776-2261
▹	Ronald S. Zarowitz	415-03-21	876-1126	822-5069

CC

D. Bostwick	414-02-10	T. Moore	463-00-00
T. Creed	483-56-02	J. Rickert	482-02-08
D. Dawkins	415-03-17	F. Sanders	482-12-02
R. Franson	415-05-30	R. Sarotte	450-03-16
J. Herlitz	483-56-02	C. Theodore	482-08-02
K. Horbatink	414-05-29	S. Torok	414-04-41
M. Levine	414-04-40	R. Winter	482-08-02
D. Malecki	482-08-02		

AGENDA
MARCH 16, 1993, 8:15 - 9:00 a.m.
CTC PROCESS COURT - CONFERENCE ROOM 2A

"60 Minutes" Seatback Strength Video . . . . . P. Sheridan
NS-Body Safety Features List . . . . . P. Sheridan

▹Attended March 9 meeting.

CBS VIDEO
19 GREGORY DRIVE
SO. BURLINGTON, VT 05403
800-848-3256

CBS VIDEO = UPS SHIPPER NO.
19 GREGORY DRIVE = VT 047-471 =
SO. BURLINGTON, VT 05403 = PKG.ID 2245517 =
800-848-3256 ==========

SOLD TO
PAUL V SHERIDAN
22357 COLUMBIA STREET
DEARBORN MI 48124

PAUL V SHERIDAN
22357 COLUMBIA STREET
DEARBORN MI 48124

INVOICE DATE	DATE SHIPPED	OUR ORDER NO.	YOUR ORDER NO.	CUSTOMER NO.	TERMS	SHIPPED VIA
3-24-92		2245517		48124SV01	30 DAYS	UPS GROUND-RES.

QUANTITY ORDERED	QUANTITY SHIPPED	B/O	ITEM NO. PICK LOC.	DESCRIPTION	PRICE	AMOUNT
			* * * THIS ORDER FILLS A BACKORDER * * *			
			* * * ORIGINAL INVOICE NUMBER - 2102183 * * *			
1	1		T0216C A	CAR SEATS	29.95	29.95
				TOTAL PIECES SHIPPED: 1		
						29.95
				HANDLING CHARGE		3.50
				INVOICE AMOUNT		33.45
				Payment: Visa has been accepted.		33.45
				AMOUNT DUE:		0.00

RETURNS ONLY IF DEFECTIVE; EXCHANGE ONLY

STATE OF VIRGINIA

IN THE CIRCUIT COURT OF PRINCE WILLIAM COUNTY

ALLYNNE L. BAIRD, Executrix
of the Estate of GEORGE N. BAIRD,
Plaintiff,
vs.
Law No. 34389
CHRYSLER CORPORATION, et al.,
Defendants.
_____/

APPEARANCES:

STEWART TILGHMAN FOX & BIANCHI, P.A.,
44 West Flagler Street, Suite 1900,
Miami, Florida 33130.
For the Plaintiff.
BY: DAVID W. BIANCHI.

CHAMBERS, STEINER, MAZUR, ORNSTEIN & AMLIN, P.C.,
1490 First National Building,
Detroit, Michigan 48226.
For the Deponent.
BY: COURTNEY E. MORGAN, JR.

VIDEOTAPED AND CONFIDENTIAL
DEPOSITION OF PAUL V. SHERIDAN
(Taken July 24, 1995)

CONFIDENTIAL

NATIONAL ... INC.
20660 ... 110
SOUTHFIELD, ... 1076
(313) ...

TAB

22

Inter Company Correspondence

To — Name & Department		Telephone	Date
J.K. Nemeth	General Manager, Mini-Van Platform	C.C.	July 27, 1990
From — Name & Department			**CMS Number**
H.G. Cook	Manager, Doors, Hardware and Sealing Engrg.	C.C./Aero	418-04-42
			416-25-14

Subject: **MINI-VAN LIFTGATE LATCH - LOAD CAPACITY**

As a result of an inquiry from NHTSA concerning the safety performance of the rear liftgates and latches, Mini-Van Door Engineering evaluated the capability of the 1991 AS-Body liftgate latch relative to FMVSS No. 206 "Door Locks and Door Retention Components" which specifies side door component requirements. FMVSS No. 206 essentially requires the following for a side door latch and striker assembly:

- Primary and secondary latch positions.
- Non-separation under a longitudinal load of 2500 lbs. on primary and 1000 lbs. on secondary.
- Non-separation under a transverse load of 2000 lbs. on primary and 1000 lbs. on secondary.

A cursory analysis of the 1991 AS-Body liftgate latch and some competitive vehicles provided the following:

Vehicle/Spec.	Primary Longitudinal/Transverse (Vertical/Open)	Secondary Longitudinal/Transverse (Vertical/Open)
FMVSS No. 206 Requires	2500/2000	1000/1000
Chrysler Specification Requires	----/750	----/----
1991 AS-Body Pull Test	3200/1300	None
Ford Aerostar Specification	3100/2500	1250/1250
GM APV Specification	2000/1350	2000/1000
Nissan Axxess	Latches contain both primary and secondary positions - load capacities unknown.	
Toyota Previa		

In order to modify the present AS-Body latch to meet the 2000 lb. primary transverse load requirement, the ratchet would require redesign to increase thickness and width and both the ratchet and pawl would require a higher strength steel. The piece cost penalty is estimated to be $.25 to $.50 and the tooling cost covering both suppliers is estimated to be $125,000. The timing to modify the latch is approximately 32 weeks.

84-110-7878

Door Engineering is presently conducting a study to incorporate a MAGNA latch system in the 1994 AS-Body. This MAGNA latch, which is presently released for the 1992½ ZJ, offers several improvements and would meet the FMVSS No. 206 primary strength requirements. It does not include a secondary latch position.

Based on Chrysler's position, as stated in our response o NHTSA that we do not believe there is a significant problem with liftgate retention, I recommend that we continue with the current latch system at least through 1993 unless mandated to change by NHTSA.

Our plan is to have trend numbers on piece cost and investment for the MAGNA latch by 8/1/90 so that Program Management can include this proposal in the Lutz presentation on 8/10/90. Our detailed study is scheduled for completion approximately 10/1/90. Please contact me if you need additional information.

H. G. Cook

H.G. Cook

/jmm

cc: E.J. Laginess
R.A. Blazic
R. Schwartz

TAB

22

P.14 AUTOCAR MAGAZINE
30 JUNE 1999

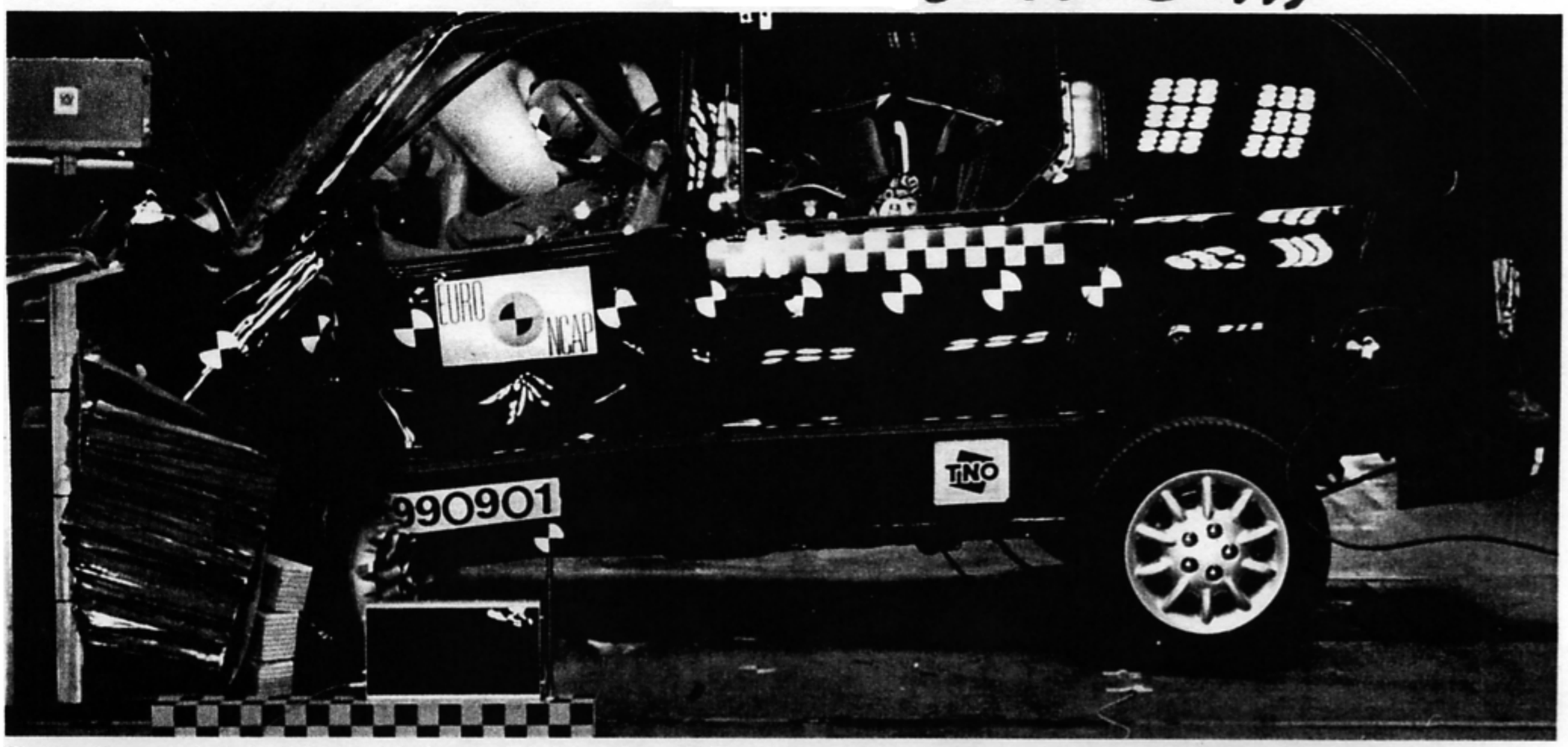

Chrysler Voyager singled out for poor performance in latest Euro NCAP crash tests; it fared so badly in frontal impact that it was not awarded a score

Voyager gets zero in crash test

Chrysler's Voyager has been given the lowest-ever score in the latest round of Euro NCAP crash tests.

The Voyager, the UK's second best-selling MPV, was given a zero rating in a 40mph head-on collision – which means that there was virtually no chance of escaping life-threatening injuries. By contrast, the Renault Espace was given a 67 per cent rating, making it the best in class.

Other poor performers included the new Mitsubishi Space Wagon and the discontinued Vauxhall Sintra, which received 24 per cent and 21 per cent respectively. NCAP safety experts said that the

Top-scoring Espace awarded four stars in frontal impact tests; overall score 84 per cent

HOW NCAP'S DUMMY DRIVERS FARED

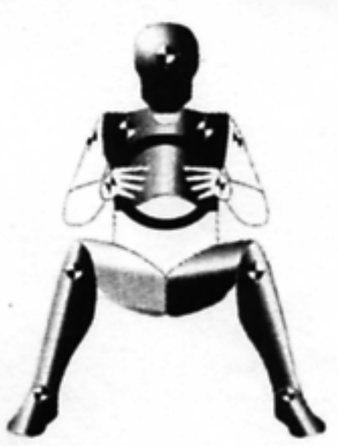

CHRYSLER VOYAGER		RENAULT ESPACE	
Front and side impact rating	★★☆☆	Front and side impact rating	★★★★
Pedestrian test rating	★☆☆☆	Pedestrian test rating	★★☆☆
Test scores: Front	0 per cent	Test scores: Front	67 per cent
Side	89 per cent	Side	100 per cent
Overall	45 per cent	Overall	84 per cent

Good · Adequate · Marginal · Weak · Poor

US NEWS HOWARD WALKER

Volkswagen's Beetle plant in Mexico escaped serious damage in last week's earthquake, which measured 6.7 on the Richter scale.

Chrysler's first museum opens in Detroit in October. The Walter P Chrysler Museum will have 75 cars and trucks from the company's past.

Fender-bending drivers should avoid the Mitsubishi Shogun. In US insurance tests in which 4x4s were crashed at 5mph, the Shogun suffered $6242 (£3950) in damage, the Merc ML320 just $2918 (£1845).

Hummer has released a list of its celebrity owners. Boxer Mike Tyson has six, while movie star Arnold Schwarzenegger owns five. Others include tennis champ Andre Agassi, writer Tom Clancy and actor James Earl Jones.

Parts threat from BMW

BMW chairman Joachim Milberg has warned that Rovers will use more imported parts if the pound stays at its current high level.

Milberg, speaking after BMW secured a £152 million Government grant to save Longbridge, said the Rover 75 had only 75 per cent British parts against the 600's 85 per cent.

BMW will invest £3 billion in Rover in the next five years, starting with the 200 and 400 replacements.

Milberg: sterling too strong

MINIVAN1.SCR
7/Orr/Triay/Goldman/Shaffir
Chrysler Air Bag Deaths
Evening News 5/17/99

VO: THIS IS THE CRASH TEST THAT STUNNED FEDERAL REGULATORS. THE PASSENGER DUMMY IN THIS 1997 CHRYSLER MINIVAN SUSTAINED LIFE-THREATENING INJURIES -- INJURIES CAUSED BY THE VEHICLE'S AIR BAG.

NOW, CBS NEWS HAS LEARNED, THE NATIONAL HIGHWAY TRAFFIC SAFETY ADMINISTRATION, HAS COMPLETED 11 ADDITIONAL TESTS OF CHRYSLER MINIVAN AIR BAGS. AND IN MORE THAN HALF OF THOSE TESTS, THE PASSENGER SIDE AIR BAG CAUSED WHAT WOULD BE CATASTROPHIC INJURIES.

CHRYSLER CHALLENGES THE GOVERNMENT'S TESTING METHOD, CLAIMING THE SMALL DUMMY USED ISN'T YET PERFECTED...AND CHRYSLER CLAIMS ITS OWN TESTS SHOW THE AIR BAG IS SAFE.

(GRAPHIC #1)
SUSAN CISCHKE, CHRYSLER'S VICE PRESIDENT OF SAFETY, SAYS "WE DON'T BELIEVE THERE IS ANYTHING WRONG WITH THE AIRBAG SYSTEM."

(GRAPHIC # 2)
BUT, ALSO TROUBLING TO REGULATORS... IS WHAT THEY FOUND WHEN THEY TOOK A SECOND LOOK AT ACTUAL ACCIDENTS. THE GOVERNMENT'S SPECIAL CRASH INVESTIGATION HAS FOUND OF THE 22 AIR BAG RELATED DEATHS AND SERIOUS INJURIES OF PASSENGERS IN MINIVANS....20 OF THEM HAVE BEEN IN CHRYSLER MODELS, BUILT BETWEEN 1994 AND 1996.

Ditlow walk: NATS
"THE BAG IS TOO AGRESSIVE...."

VO: TWO AND A HALF YEARS AGO CLARENCE DITLOW, AN AUTO SAFETY ADVOCATE....

(GRAPHIC #2)
ASKED THE NATIONAL HIGHWAY TRAFFIC SAFETY ADMINISTRATION TO INVESTIGATE THE CHRYSLER AIR BAG. AT THE TIME THERE HAD BEEN NINE PASSENGER FATALITIES. THE REQUEST WAS TURNED DOWN.

SOT/DITLOW 28-10 THE GOVERNMENT NOW HAS THE DEATHS IT WANTS. THE GOVERNMENT SHOULD NOW ORDER CHRYSLER TO DO A RECALL IF CHRYSLER WON'T DO IT ITSELF

NATS: ORR AND SANDERS WALKING

VO: ROB SANDERS ALSO WANTS CHRYSLER TO MAKE CHANGES. HIS DAUGHTER ALLISON WAS KILLED IN 1995 IN A LOW SPEED COLLISION INVOLVING THE FAMILY'S CHRYSLER MINIVAN.

THE SEVEN YEAR OLD HAD SLIPPED OFF HER SHOULDER HARNESS TO REACH FOR THE RADIO WHEN THE CRASH HAPPENED. THE AIR BAG EXPLODED IN ALLISON'S FACE.

SOT/ROB SANDERS
2105 AND THEN I TURNED OVER AND LOOKED AT ALLISON AND SAW THAT SHE WAS UNCONSCIOUS AND I WAS JUST SHOCKED AND HORRIFIED. I COULDN'T UNDERSTAND WHY SHE WOULD BE IN THAT KIND OF CONDITION IN SUCH A MINOR FENDER BENDER ACCIDENT.

VO: SANDERS IS NOW SUING CHRYSLER, ALLEGING THAT A DEFECTIVE AIR BAG SYSTEM CAUSED HIS DAUGHTER'S DEATH.

BUT, CHRYSLER SAYS, LIKE ALLISION SANDERS, NEARLY ALL OF THOSE KILLED WERE UNBELTED OR IMPROPERLY BELTED. CHRYSLER ALSO POINTS OUT IT HAS TWO THIRDS OF ALL MINIVANS ON AMERICA'S HIGHWAYS AND THEREFORE FACES A STATISTICALLY HIGHER PROBABILITY OF ACCIDENTAL DEATHS.

ALSO, CHRYSLER SWITCHED TO A LESS FORCEFUL PASSENGER SIDE AIR BAG DURING THE 1997 MODEL YEAR. AND WITH OTHER AUTOMAKERS, IN 1998, BEGAN USING AN EVEN LOWER-POWERED AIR BAG.

ORR CLOSE:
BUT, NEARLY TWO MILLION OLDER CHRYSLER MINIVANS, WITH THE ORIGINAL, MORE POWERFUL, AIR BAGS REMAIN ON THE ROAD. AT THIS POINT, CHRYSLER SAYS THERE IS NO NEED FOR A VOLUNTARY RECALL. BUT SOURCES SAY THE GOVERNMENT IS CLOSE TO DECIDING WHETHER TO LAUNCH A FORMAL "DEFECTS" INVESTIGATION THAT MAY ULTIMATELY FORCE THE ISSUE. BOB ORR, CBS NEWS, WASHINGTON.

VIA SATELLITE

USA TODAY

Money

FRIDAY, DECEMBER 15, 1995

MC

MONEYLINE

A QUICK READ ON THE TOP MONEY NEWS OF THE DAY

MARKETS

THURSDAY

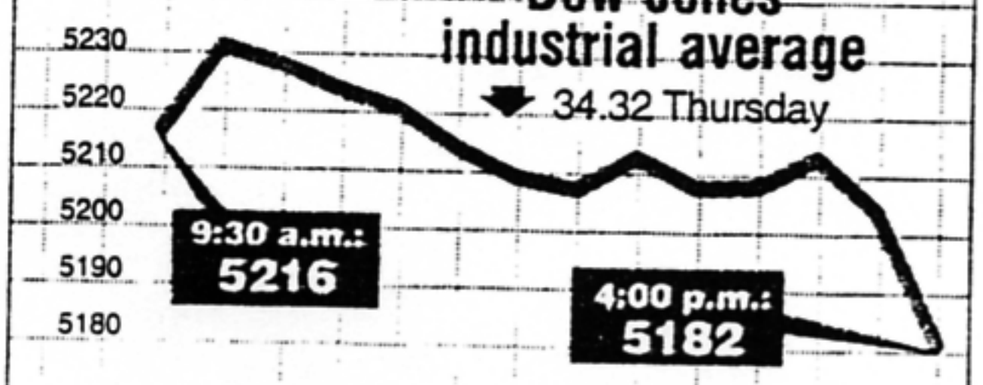

Nasdaq composite	1038.19	▼ 18.35
S&P 500	616.92	▼ 4.77
T-bond, 30-year yield	6.08%	▲ 0.01
T-bill, 3-mo. discount rate	5.26%	— unch.
Gold, oz., Comex	$386.00	▼ $0.40
Lt. sweet crude oil, N.Y. Merc.	$19.11	▲ $0.11

Market Scoreboard, 3B

CHIP TRADE: **Foreign companies' share of the** Japanese market for computer chips hit an all-time high of 26.2% the third quarter, the Clinton administration said Thursday. The White House said that is proof a controversial 1986 U.S.-Japan semiconductor trade agreement is working and should be renewed. The old record: 23.7% in fourth-quarter 1994. Japan says the pact is unnecessary and amounts to managed trade.

CRASH TESTS: **Chrysler's Dodge Grand Caravan** received the lowest score for driver protection among six 1996 minivans tested in 35-mph frontal crashes by the National Highway Traffic Safety Administration. The safety agency rates crash protection from one to five stars, with five the best head-and-chest protection. In results released Thursday, the Chrysler minivan scored three stars for driver protection and four for passenger. Top minivans: Ford Windstar, with five stars for drivers and passengers in an earlier test. The Ford Taurus sedan and Dodge Neon each received four stars both for driver- and-passenger protection. Lowest: the Toyota Tacoma pickup, at two stars for drivers and three for passengers. Vehicles are required to pass 30-mph crash tests. NHTSA conducts the higher-speed tests to help consumers compare vehicles.

Business Trave

By Rhonda Richard

'Round the Wor
resumes Pan Am's o
the-World service to
the first flight leaves
les for Hong Kong; N
India; London; and N

Weather watch:
ice are expected tod
parts of the Northea

Holiday rates: H
rates ranging from $
a night on some roon

'News

Microsoft and Gen
and an interactive
will begin operatio
for a 50% stake in
and MSNBC Onlin

NBC News

Continues broadca
national and interna
over regular TV ch

MSNBC Cabl

24-hour basic cable
will provide in-depth
and news shows. It
NBC's America's Ta
cable systems.

Microsoft Network Onlir

For a subscription f
users will be able to
personal data about
and get customized
information, plus ful
video and sound fro
They'll be able to fa
and rewind the vide

What you coul to get MSNBC

Estimated monthly c

Basic cable
Microsoft Network
Cable modem renta
Total

1 – Standard plan, 3 hrs. connect addtl. hour.
2 – Cable modem needed for full-

Source: NCTA, USA TODAY rese

Investors shell out

INTERACTIVE EDITION. FROM THE ARCHIVES

AS LOW AS $1,279
Configure and order online!

COMPAQ Direct

March 2, 1999

Regulators Raise Questions on Air Bags As Minivan Study Has Surprise Result

By ANNA WILDE MATHEWS and JEFFREY BALL
Staff Reporters of THE WALL STREET JOURNAL

Federal auto-safety regulators who set out to determine whether trucks pose an outsized hazard on the road scored another hit on air bags instead.

U.S. regulators said Monday that during crash tests involving several different types and makes of vehicles, staged last summer to gather data about the hazards light trucks pose to cars in collisions, a 1997 Dodge minivan air bag deployed with such force that a small female dummy seated on the passenger side showed far-worse-than-expected results for neck injury.

Safety experts said the outcome could well be equivalent to a broken neck in a real woman.

The disclosure -- which surprised officials of DaimlerChrysler AG, maker of the Dodge miniva -- partly overshadowed the National Highway Traffic Safety Administration's findings about car-truck crash safety. The government said its tests confirmed that light trucks tend to do more damage in accidents, but concluded that more study is needed before any regulatory action. A separate study from researchers at the University of Michigan concluded that 2,000 people died in 1996 because their cars were hit by a truck instead of a car with more forgiving crash performance.

Interest in the issue was spurred by the increasing numbers of light trucks and sport utility vehicles on the road.

But agency officials said the surprising data from the air-bag incident have caused them to take immediate actions, launching new research into **Chrysler** minivan air bags. The agency said it expects to wind up the probe this summer. One question is whether the result was caused by a quirk in the design of the dummy.

The passenger air-bag system used in the 1997 model was also used in 1996, DaimlerChrysler said, but not in 1998 or 1999, when federal regulations changed to allow less-powerful air bags. The company

Journal Atlas:
Table of Contents
Headlines
Business Index
Search
News Search
Past Editions
Briefing Books
Quotes

Resources:
Help
New Features
Your Account
Contact Us
Glossary
Special Reports

Select exchange:
U.S.
Enter symbols:
Go
Symbol lookup

Related Sites:
Barron's Online
Careers.wsj.com
DJ University
Personal Tech
Publications Library

Publications Library
SmartMoney.com
wsj.com Radio

Corrections

sold about a million of the 1996 and 1997 minivans.

Order in Philadelphia

The announcement comes at a bad time for DaimlerChrysler, which has long emphasized the safety of its minivans to families. Earlier last month, a Philadelphia jury ordered the company to pay an estimated $63.6 million to Pennsylvania owners of **Chrysler** cars from the late 1988, 1989 and 1990 model years whose driver-side air bags could burn a driver's hands when the bags deployed. The company plans to appeal.

The NHTSA announcement, made at the Society of Automotive Engineers conference in Detroit, also comes as DaimlerChrysler and its competitors are pushing harder than ever to develop more-sophisticated technology to alleviate public concerns about air bags.

Air bags deploy in a collision when an explosive charge inflates a fabric bag, and they have saved thousands of lives. But high-powered air bags also have killed 125 people, mostly children and small adults, since 1990. Both Ford Motor Co. and General Motors Corp. have announced plans to introduce so-called smart air-bag systems that would pose less threat to children and small adults. Federal regulators are moving to mandate such systems for all light vehicles.

But in the meantime, auto makers face risks of litigation and potentially costly recalls related to previous-generation airbag technology, which was effectively mandated by the government.

A spokesman for DaimlerChrysler, which was only informed of the test outcomes Monday, said the company was "outraged that NHTSA would wait almost eight months to release these results." The spokesman said the company is "taking NHTSA's concerns very seriously, and we share their concerns." He said it would be "speculative" to gauge the test's effects on the company's liability.

Petition in 1996

Safety advocates filed a petition in 1996 for a safety investigation of the air bags in **Chrysler** minivans, along with two models from other companies. The NHTSA turned down the request by the Center for Auto Safety, which centered on the air bags' tendency to deploy in low-speed crashes.

If a systematic problem were eventually found with the passenger-side air bags, a recall and replacement would likely be very costly, because of the complexity of the air-bag system.

In the test that caused the recent result, the NHTSA was ramming the minivan into the left front of a midsize sedan. Both vehicles were moving at 35 miles per hour, and the dummies in the front seat were wearing seat belts. Federal regulators have proposed that auto makers be required to score 1.4 or lower on the neck-injury criteria; the minivan scored 4.4 on the test.

DaimlerChrysler's competitors cautioned against reading too much

into the NHTSA announcement. "That could just be a bad test," said a Ford spokeswoman, who added that Ford is "very comfortable" with the safety of its own air-bag systems. At GM, Bob Lange, director of safety engineering, assailed the way NHTSA released the results. "It's difficult to be blindsided by a test result that, on its face, appears to be pretty negative."

The studies on crashes involving cars and trucks confirmed earlier NHTSA findings that the weight and design of a light truck affect how much damage it does to a car. Heavier trucks, with front ends that are less likely to crush in a crash, do more harm. Moreover, the location of the crash has an effect: A front-to-side impact does more damage than a front-to-front accident.

In a separate study released Monday at the Detroit conference, researchers found that three-point seat belts provided the best protection for pregnant women, while a powerful air bag could pose risk to the fetus. The researchers, from the University of Michigan, estimated that 1,500 to 5,000 fetal losses occur each year in the U.S. because of all auto crashes.

AS LOW AS $1,279
Configure and order online!

COMPAQ DirectPlus

Return to top of page | Format for printing

Copyright © 1999 Dow Jones & Company, Inc. All Rights Reserved.

Article 7

Return to Headlines

NEWS
`Both Air Bags Exploded' / Man says he turned van's key, and in a flash he was hurt
Merle English. STAFF WRITER

04/03/99
Newsday
QUEENS
Page A21
(Copyright Newsday Inc., 1999)

A Flushing resident who says dual-side air bags exploded simultaneously Thursday when he turned the key in his minivan's ignition, forcing him from the vehicle and causing injuries, is planning to sue the carmaker.

Mohinder Singh, 21, said Friday he will file a $5-million lawsuit in State Supreme Court on Monday against DaimlerChrysler Corp., alleging negligent manufacture of his 1996 Dodge Caravan and product liability.

"It's obscene to think that something that's supposed to protect you does harm," said Mason-Blake Pimsler, Singh's attorney. "Air bags are to be deployed only in a total impact, never when you turn a car on."

According to Singh, the minivan was parked in front of a courier business at 125 E. 23rd St. in Manhattan, where he works. "I got into the car, turned the ignition to heat up the car, and both air bags exploded," he said in a telephone interview.

The explosion knocked him through the driver's-side door, Singh said, and he became unconscious for a few minutes. Emergency Medical Service technicians were called and he was given an ice pack, he said, but he told them he wished to see a private doctor.

Singh, who went to the doctor Friday, said he suffered injuries to his neck, head, back and right wrist.

"I cannot even sleep at night," he said. "I hurt now. My fingers are tingling." He said "the whole dashboard exploded" and pieces of plastic hit him.

"I'm so scared to drive my car," Singh said.

DaimlerChrysler was closed Friday in observance of Passover and Good Friday; no one there could be reached for comment.

Singh said he has had the vehicle regularly serviced by Dodge dealers, most recently about three months ago. The bags never deployed before, he said.

The National Highway Traffic Safety Administration has been investigating more than 800,000 Dodge Caravans from model years 1994 and 1995. There were 28 consumer complaints, most involving driver air bags that blew open just after the driver turned the ignition key.

The status of the investigation could not be determined Friday.

Newsday Photo / Ken Sawchuk - Mohinder Singh, left, and his attorney, Mason-Blake Pimsler, with one of the Dodge Caravan air bags that Singh says exploded Thursday as he turned the key in the minivan's ignition. Singh, who says he was injured, is planning to sue the carmaker.

Display as: Full Article

Return to Headlines

Format For Printing

Copyright © 1999 Dow Jones & Company, Inc. All Rights Reserved.

NEWSPAPER

Automotive News®

DECEMBER 12, 1994 Entire contents © 1994 Crain Communications, Inc. Use of editorial content without permission is strictly prohibited. All rights reserved. $80/YEAR; $2/COPY

late news

Japan importer reports loss

TOKYO — Yanase & Co. Ltd., Japan's largest auto importer, reported that it has lost money for the second straight year as it goes through a painful restructuring.

Yanase, which imports and distributes vehicles from Mercedes, GM North America and Opel, said it had a net loss of 6.27 billion yen, or $63 million, in the fiscal year through September. Revenue dropped 9.7 percent from a year earlier to $3.8 billion.

The importer slipped into the red for the first time in 61

see LATE NEWS, 2

Chrysler races minivan fixes

Crash-test woes stall prototypes

JOSEPH BOHN
Truck Editor

Chrysler Corp. is racing to put together a production-viable prototype of its new 1996-model minivans, after crash tests in mid-October and in early November showed the new minivans did not meet Federal Motor Vehicle Safety Standard 208.

FMVSS 208, a major standard, requires that an unbelted test dummy withstand a 30 mph front impact without serious injury.

Any substantial production delays could prove costly as Chrysler prepares its 1996 minivans to compete with the Ford Windstar in defense of Chrysler's minivan sales crown.

KPG PHOTOGRAPHY

This computer-enhanced shot of a body shell gives a good indication of the overall styling of Chrysler's 1996 minivan.

With only nine weeks til the planned Feb. 13 production launch at St. Louis, Chrysler is on a tight schedule to comply with the standard using new componentry. In late November, the company moved back Job 1 dates by 1½ months at its two other minivan plants.

Since Nov. 4 Chrysler has put together engineering prototypes that passed FMVSS 208 in three crash tests. Another test was slated for Chrysler's Chelsea, Mich., proving grounds last Friday. But the modified vehicles require new componentry, some of which must be tested and tooled.

Chris Theodore, general manager of Minivan Platform Engineering, says development of the new minivan, code-named NS, is running ahead of some of Chrysler's previous new-model programs. But a hot topic among minivan engineers at a Dec. 6 Minivan Platform meeting was whether engineers will need to work Christmas Day.

Theodore says he doubts the engineers will work Christmas Day. But he says he has told his engineering team not to plan any extended vacations over the holidays for the next year.

12 AREAS EFFECTED

According to an internal status report, as of Dec. 1, Chrysler engineers recommended changes to design and components in 12 major frontal areas of the NS to enable it to pass FMVSS 208.

But Theodore says, "Everything we are doing is known and timed out and will be verified before production."

He won't say if the production

see MINIVAN, 33

Ford cuts Mark VIII price tag in Calif.

$4,475 jump start may go national

MARY CONNELLY

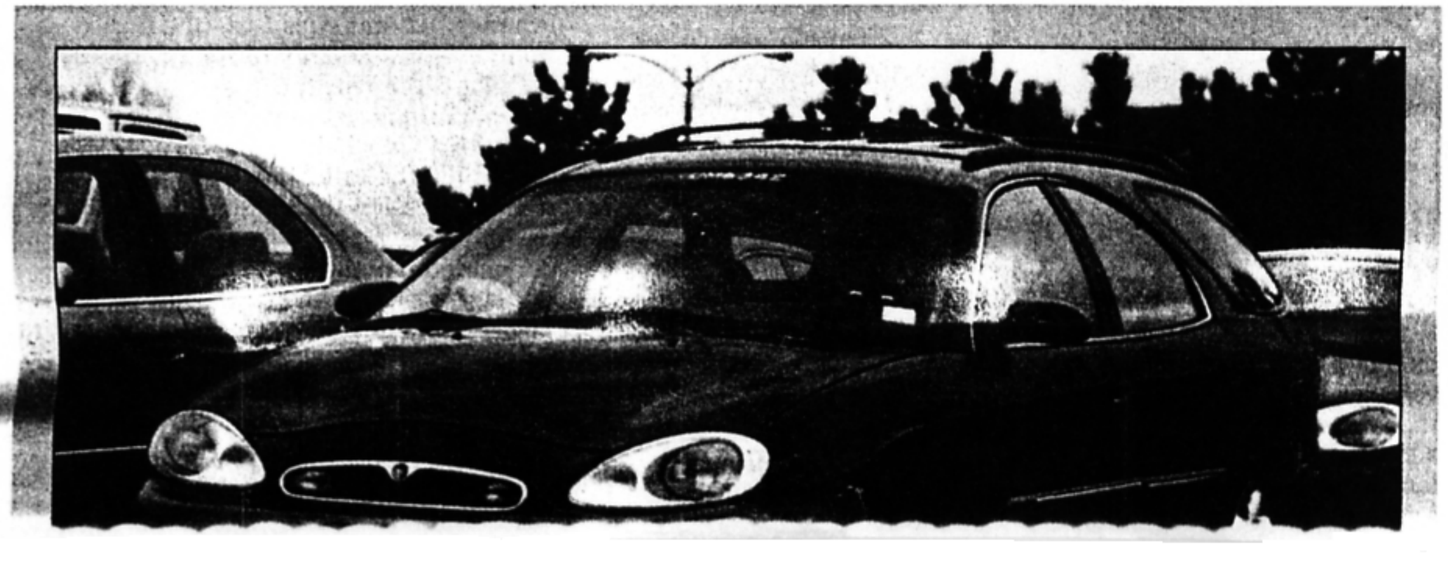

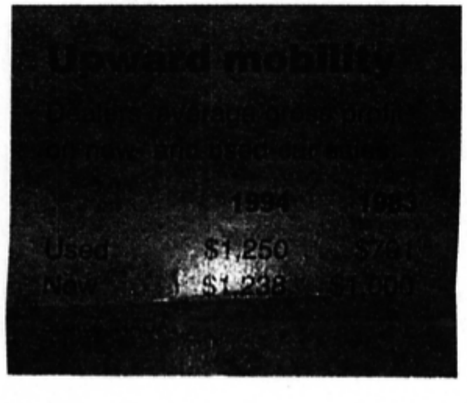

Dealers reap more profits

ers sell roughly 1.2 million program vehicles annually.

According to NADA, the rise in used-vehicle profits results from dealers retailing more late-model used cars and selling at wholesale more older, less-profitable vehicles. A Midwest dealer said his average gross profit in November on low-mileage, used vehicles was $1,418, compared to $987 in gross profit for the same models new.

The $400 difference is due to the growing consumer demand for used cars because the supply of late-model used cars is coming. Two- and three-year leases are more than a million vehicles will expire this year; up to 700,000 of these vehicles will be available for dealers to sell. AN

MINIVAN

Testing woes delay Chrysler

continued from PAGE 1

startup at St. Louis will be set back for a second time. St. Louis had originally been slated to start regular dealer production in January, but earlier this year the date was moved back to Feb. 13.

"We don't confirm dates," says Theodore. But according to Chrysler's internal report, the company will delay startup of NS production at Windsor until next July and at the Graz, Austria, plant until September in order to give the St. Louis launch team more time to get the NS rolling.

TESTING HISTORY

Chrysler has done 17 prototype crash tests for various federal safety standards, according to an internal report. But in a crucial eight-month period between January and mid October this year, it did not do any NS prototype crash testing for FMVSS 208. The failure of its two planned production prototypes caught engineers by surprise and set off the scramble to make the minivans comply.

The company first crash-tested two very early versions of the NS last December and January, but they were not intended as production models. Both passed FMVSS 208 requirements. In a Jan. 21, 1994 test of an NS equipped with a 2.4-liter four-cylinder engine and three-speed automatic transmission, the test dummy hit the airbag with a force of 41 G's, well within the government's limit of 60 G's and Chrysler's standard of 48 G's for impact deceleration without injury.

But, on Oct. 14, in its first crash test of a production-planned prototype — four months before Job 1 — the test dummy hit the steering wheel with a force of 69 G's, enough to crush its chest.

To double-check, Chrysler ran another crash test at Chelsea Nov. 4. This time, the dummy fared even worse, smashing the wheel with a force of 75 G's, according to an internal report.

Since then, the company has sharply stepped up its FMVSS 208 testing. It conducted three crashes from prototypes put together by its engineers that passed FMVSS 208. A fourth was planned last Friday.

Chrysler has made considerable progress in the last four weeks.

In tests Nov. 21 and Nov. 29, for example, dummies in the modified NS models crashed into a wall at Chelsea with a force of 44.6 G's and 47.8 G's, respectively.

Even so, Chrysler's crash testing for FMVSS 208 so far has been limited to long wheelbase models, equipped with a V-6 engine and four-speed automatic transmission. It still has to prove the crashworthiness of short-wheelbase NS models, equipped with the four-cylinder and three-speed automatic and models equipped with Mitsubishi's 3.0-liter in meeting FMVSS 208.

The long-wheelbase models are slated to be built first. They present the biggest problem because they are the heaviest. Having the flexibility to build a variety of short- and long-wheelbase models at all plants is a key part of the NS production strategy.

SAFETY CHANGES

Engineers have recommended changes to the front body, chassis, engine mounts, steering column, wheels, front seats and front bumper of the NS models to bring them into compliance with FMVSS 208. Some of the component changes require new tooling.

In Chrysler's production prototype crash tests, the steering column tilted up, causing the test dummy to slide under the airbag, hit the steering wheel and break its chest. The company has re-engineered the tilt mechanism in the steering column to restrict its movement. It also changed the front seat tracks and is switching to a more secure, dual-tethered airbag for better deployment.

Originally, Chrysler planned a less expensive, untethered "E-fold" airbag that could be folded up by a machine. But now, supplier Morton International Inc.'s Automotive Safety Products Group in Ogden, Utah, will have to hand fold the dual-tethered bags before shipping them.

Chrysler also is adding double knee blockers, with a higher gauge strength, after tests showed the original knee blockers crumbling and the dummy's knees sliding underneath them.

Chrysler also will use a higher gauge steel in front bumpers than originally planned and cut holes in front bumper rails to reducing bending stiffness. It is adding multiple holes and slots to its lower radiator crossmember and longitudinal rails, and bevelling the left rail tip to provide more crush clearance for the transmission end cover.

Engineers are moving the driver closer to the restraint system and putting the driver in a more upright posture by inclining front seats to a full upright position. They also eliminated some down travel from the power seat adjusters. There are new engine mounts and other planned changes.

Chrysler will delay Job 1 for regular dealer output at Windsor by seven weeks to July 5, 1995, allowing its launch support team to get St. Louis up to full line speed, according to a memo. AN

Minivan production plans as of Dec. 1

Start date for	St. Louis	Windsor	Austria
LWB prevolume production	Jan. 30	—	—
LWB dealer production	Feb. 13	—	—
SWB prevolume production	March 1	—	—
SWB dealer production	March 27	—	—
SWB/LWB dealer production	—	July 5	
SWB/LWB dealer production	—	—	Sept. 25

Notes: LWB=long wheelbase models; SWB=short wheelbase models.
Source: Chrysler Minivan Status Review report

Minivan crown vulnerable

Changeovers and production delays in Chrysler Corp.'s new 1996 model minivans could well cost it minivan sales leadership next year.

Chrysler will headily take the minivan sales crown this year, as it has ever since it pioneered the segment in 1983. Production began Nov. 1, 1983.

In 11 months of calendar 1994, Chrysler retailed 488,378 minivans in the United States, giving it a 149,903 lead over Ford Motor Co.'s combined minivan sales.

But, recently, Ford Motor has closed the gap. The automaker offers the Aerostar, Windstar and Mercury Villager.

Chrysler Corp.'s models include the Chrysler Town & Country; Dodge Caravan, Caravan C/V and Grand Caravan; and Plymouth Voyager and Grand Voyager.

In November, combined Ford Motor Co. minivan sales totaled 30,207 units, within 3,169 units of Chrysler's 33,376.

Before the most recent delays, Thomas Pappert, Chrysler vice president of sales and marketing, already estimated Chrysler would lose about 60,000 minivan sales due to changeover. The delay at Windsor could cut an additional 4,741 units from Chrysler's total.

It now seems like model changeover downtime will cost Chrysler close to 65,000 minivans next year, an average of more than 5,000 a month, which puts Chrysler's minivan sales crown within striking range of Ford.

— Joseph Bohn

Extra '95 minivans boost bottom line

Chrysler needs to bring the 1996 minivans to market to compete with the Ford Windstar, but the automaker is trying to build carryover inventory.

On Dec. 1, there was a 93-day supply.

Although Chrysler will lose more production, internal calculations show that Chrysler will earn an extra $5.5 million profit from the changes.

The company expects to earn $6,200 to $6,600 a unit from extra 1995 models built in Ontario during the first and second quarters and $5,500 to $5,800 per unit from 1996 models produced there in the second half.

— Joseph Bohn

TAB

24

NBC NEWS
30 Rockefeller Ctr. NY, NY 10112

Number 425

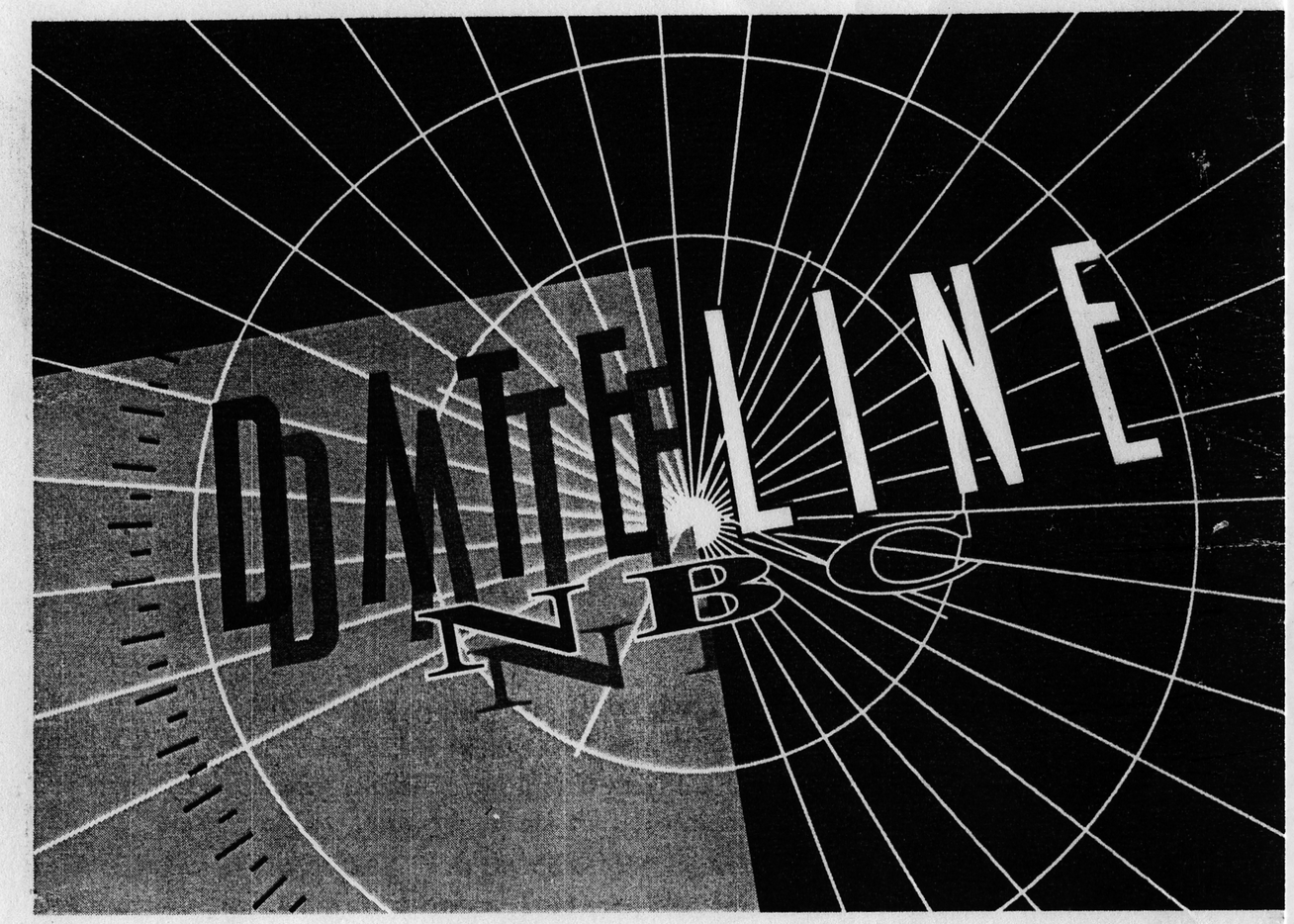

November 19, 1996

©1996 National Broadcasting Company, Inc.
ALL RIGHTS RESERVED
We hereby grant nonexclusive permission to publish and reprint up to 250 words
of this transcript for the purposes of reference, discussion or review.

Transcript produced by *BURRELLE'S INFORMATION SERVICES*
Box 7 • Livingston, New Jersey 07039

DATELINE
NBC
BURRELLE'S TRANSCRIPTS
Box 7 • Livingston, NJ 07039

PAULEY: *(Voiceover)* Plus, art in a can, DATELINE's Picture of the Week.
(Picture of the Week graphic)
Announcer: DATELINE, with Jane Pauley and Stone Phillips, plus Tom Brokaw, Katie Couric, Bryant Gumbel, and Maria Shriver. DATELINE continues after this brief message.

CRASH TEST

Announcer: From Studio 3B in Rockefeller Center, here is Jane Pauley.
JANE PAULEY: Good evening. They've all but replaced the old station wagon. Soccer moms and dads all across the country drive them. In fact, roughly one out of every 10 cars sold in America is a minivan. They're the new family car. But have you ever wondered how well a minivan will protect you and your family if you're in a serious accident. Well, it's a good question. And the answer may depend on what make and model you're in. Tonight, see for yourself as chief consumer correspondent Lea Thompson brings you this DATELINE Exclusive.
Mr. BRIAN O'NEILL: *(Voiceover)* What these tests show is that in some of these minivans the chance of an injury are high.
(Crash test)
LEA THOMPSON reporting: *(Voiceover)* DATELINE cameras are behind the scenes at one of the most modern automobile crash test centers in the world.
(Researchers)
Unidentified Man #1: *(Trying to remove dummy from crashed vehicle)* It's not even budging.
THOMPSON: *(Voiceover)* Researchers here at the Insurance Institute for Highway Safety are trying to understand why one family minivan can look like this, while another looks like this, all in the same test.
(Researchers; crash tests)
Mr. O'NEILL: *(Show dummy in crashed minivan)* There's just no room left back down here. I believe that that foot is separated from the leg.
THOMPSON: *(Voiceover)* The commercials say they're the perfect family car for the '90s, millions on the road, many driven by mothers with their kids. So, how well would a minivan protect you in a serious crash at 40 miles an hour?
(Minivan commercial; highway)
Unidentified Man #2: *(With minivan)* Other way.
THOMPSON: *(Voiceover)* The Institute is about to find out.
(Institute)
Man #2: *(Setting up crash test)* Boy, that's right on the money.
THOMPSON: *(Voiceover)* It's funded by insurance companies and says its goal is to cut the cost of insurance claims by making cars safer. It will be testing some of the most popular minivans in America: the Dodge Grand Caravan, the Ford Aerostar, the newly designed van from General Motors—the Pontiac Trans Sport, nine minivans in all. Every one of these vans meets federal regulations. The question is, can they pass a test the government doesn't do? Two years ago the Institute began what it calls a revolutionary new series of crash tests, very different from the government's. The government tests cars by running them head-on into a flat wall, the force spread evenly across the front. But in any junkyard you'll see many accidents don't happen that way. So the Institute tests cars by hitting a wall off center—'off set' it's called—concentrating the forces on just one side. The test is carefully designed to simulate what happens if two cars hit like this, driver to driver at 40 miles an hour.
(Institute; minivans; crash test set up; crash test; simulated crash; junkyard; simulated crash test; video of crash)
Mr. O'NEILL: We've chosen the speed that is representative of serious, real world crashes.
THOMPSON: *(Voiceover)* And the institute's Brian O'Neill says some cars do well in the new test.
(Movie camera)
Mr. O'NEILL: *(Showing video of test)* This is the Ford Windstar. This is by far the best performer.
THOMPSON: *(Voiceover)* There's plenty of damage, but O'Neill says it's distributed around the driver, not into him. The safety cage holds. Any injuries at all to the dummy?
(Crash test)
Mr. O'NEILL: The injury measures on this dummy were all low, indicating that there was no significant risk of injury to any body region.
THOMPSON: *(Voiceover)* The Ford Windstar survives this crash. No serious injuries, not even to the legs. But how well will the other minivans hold up?
(Damaged Windstar; crash test set up)
Unidentified Woman #1: *(Writing figures)* Torso angle?
THOMPSON: *(Voiceover)* The Institute bought these brand new minivans right off dealer's lots. Each one will be tested at the same speed, same angle, same conditions. DATELINE had no say in how the cars were chosen, tested, or evaluated.

(Institute; "Test in Progress" sign)
Unidentified Man #3: *(Voiceover)* The car is good.
(Institute)
Unidentified Man #4: *(Crash test)* Three, two, one.
THOMPSON: *(Voiceover)* This is the Dodge Grand Caravan, the top selling minivan in America, at 40 miles an hour.
(Crash test)
Mr. O'NEILL: *(Inspecting damaged minivan)* There is major intrusion. This means that the chances of major leg and foot injuries in this crash are very, very high.
THOMPSON: *(Voiceover)* The Institute says that part of the floor near the pedals is rammed back more than a foot, and the news from sensors in the dummy is not good.
(Minivan after crash test)
Mr. O'NEILL: *(Inspecting damaged minivan)* Both legs?
Woman #1: *(Inspecting minivan)* Mm-hmm. Both left and right.
THOMPSON: *(Voiceover)* Watch the front tire. The Institute says the structure of the van causes the crash forces to be focused on the feet.
(Crash test)
Mr. O'NEILL: *(Voiceover)* As a result, both of the lower legs of the dummy indicated the risk of a serious injury.
(Crash test)
THOMPSON: Would both legs have been broken?
Mr. O'NEILL: We think that in this crash both legs would have been broken. That's correct.
THOMPSON: *(Voiceover)* Remember, the Ford Windstar protected the dummy's legs. In the same test, the Dodge Caravan didn't. This is the Chevrolet Astro, also called the GMC Safari.
(Dummy being removed; crash test)
Mr. O'NEILL: *(Showing damaged minivan)* It's jammed in there.
THOMPSON: *(Voiceover)* The floor has buckled, tipping the driver's seat forward.
(Damaged minivan)
Mr. O'NEILL: *(Showing damaged minivan)* This vehicle has almost got its back broken, if you know what I mean. It's come up and buckled.
THOMPSON: *(Voiceover)* In slow motion you can see how the air bag still manages to cushion the head. But at the feet the floor is rammed back as much as 15 inches, the door jammed so tight it has to be cut open. The Institute says one leg is probably broken. But remember, this dummy is the size of an average man.
(Crash test; door being cut; damaged minivan)

THOMPSON: What would have happened if this had been a woman, short and lighter?
Mr. O'NEILL: The shorter woman would presumably have the seat further forward, so there would be even less space. As the seat's pitching forward the steering wheel is coming back and up. This is a problem when we're losing s—what we call the survival space.
THOMPSON: *(Voiceover)* This is the Aerostar, an older design from Ford. Remember, the minivans are being tested at 40 miles an hour.
(Crash test)
Mr. O'NEILL: *(Inspecting damaged minivan)* This is extremely unusual because the steering wheel is in the lap of the driver.
THOMPSON: *(Voiceover)* The steering wheel has snapped off. In slow motion you can see it happen.
(Damaged minivan; crash test)
Mr. O'NEILL: *(Voiceover)* The steering column going upwards as the driver's face is going forward into the air bag. It bottoms at the air bag and actually breaks the steering wheel off the column.
(Crash test)
THOMPSON: *(Voiceover)* But amazingly, O'Neill says, the air bag still manages to catch the head and cushion the blow just enough.
(Crash test)
Mr. O'NEILL: *(Voiceover)* The forces on the drivers head were too high, but they were not high enough to produce a very serious injury.
(Crash test)
THOMPSON: This says a lot about air bags, doesn't it?
Mr. O'NEILL: Absolutely, because this is what air bags are all about.
THOMPSON: *(Voiceover)* Again, the door has to be pried open. Measurements show the floor has been rammed back as much as 15 inches. The computer says the left leg is probably broken.
(Damaged minivan)
THOMPSON: *(Voiceover)* The Institute says this minivan faired even worse, the Toyota Previa.
(Crash test)
Mr. O'NEILL: *(Inspecting minivan)* This is the worst we've seen, I think. This is just looking terrible. I mean, this steering column is almost up in the roof.
THOMPSON: *(Voiceover)* And the seatbelt has allowed the dummy to slip down, the legs wedged against the dash board. One is probably broken. And just watch what happens to the dummy's head.
(Damaged minivan; crash test)
Mr. O'NEILL: *(Voiceover)* The driver dummy in this crash...*(unintelligible due to audio difficulties)*...the head and the neck.

Troubling forces. It's hard to predict precisely what kind of injury that would produce, but there would be head and neck injury in this crash.
(Crash test)
THOMPSON: *(Voiceover)* Ironically, the man in charge of these tests owns a minivan like this one. Now he's selling it.
(Damaged minivan)
Mr. O'NEILL: When I saw the results of this test, I decided this is not a vehicle for my family.
THOMPSON: *(Voiceover)* Remember, there was a minivan that did well in this test. The Ford Windstar protected every part of the body. In the Toyota Previa, the institute says there's a chance the head, neck, and legs all were injured. But the Institute says, even worse than the Previa is this brand new design from General Motors, the Pontiac Trans Sport.
(Crash test; damaged minivan; crash test)
Mr. O'NEILL: *(Inspecting damaged minivan)* Looks like massive amounts of intrusion. We've got the chin of the dummy on the steering wheel, which isn't good.
THOMPSON: *(Voiceover)* The wheel is under the chin.
(Damaged minivan and dummy)
Woman #1: *(Examining film)* See the steering wheel rim here?
THOMPSON: *(Voiceover)* The slow-motion film shows the dummy's head snapping back.
(Film of crash test)
Woman #1: *(Voiceover)* The structure of the vehicle just collapses. It's obvious from his head motion that it's hit the steering wheel.
(Film of crash test)
THOMPSON: *(Voiceover)* General Motors says this is one of the few vans in which the seam welds, which hold sections of the car together, didn't separate. But the Institute says the floor has been rammed back as much as 19 inches. That's more than any other van. The dummy's left leg is trapped.
(Damaged minivan)
Unidentified Man #5: *(Pulling on dummy)* It's not even budging.
THOMPSON: *(Voiceover)* It won't come free even with a crowbar.
(Dummy stuck in minivan)
Man #5: *(Trying to remove dummy)* It's not moving, is it?
THOMPSON: *(Voiceover)* Technicians finally take the dummy apart at the knee just to get it out. But there's a problem. One of the speed readings for this test is too high.
(Dismantled dummy; researchers)
Unidentified Man #6: I got 41.4.

THOMPSON: *(Voiceover)* It's only a mile and a half over test speed at the most, but the damage is so severe the institute decides it must do the test again. This is another Trans Sport. This time, the speed readings are perfect, but the damage is similar.
(Speedometer; damaged minivan; crash test; damaged minivan)
Mr. O'NEILL: *(Inspecting minivan)* Massive structural collapse.
THOMPSON: *(Voiceover)* The dummy's left leg is trapped again.
(Damaged minivan)
Mr. O'NEILL: *(Inspecting minivan)* Well, this is really bad because the ankle is actually detached from the foot. I believe that's completely snapped off. So the loads on the dummy have been such that the metal leg—this is not a bone leg—this metal leg is snapped off.
THOMPSON: *(Voiceover)* And on the slow-motion film, watch carefully...
(Crash test)
Mr. O'NEILL: *(Voiceover)* What this crash illustrates is that when the compartment fails completely, as it's done here, and is collapsing all around you, the restraint systems can't offer much protection.
(Crash test)
THOMPSON: *(Voiceover)* O'Neill says the head snaps back. The survival space collapses so much that the steering wheel is driven right through the air bag into the dummy. This time, the injury readings are even more serious.
(Crash test)
Mr. O'NEILL: A major injury to the neck, to the cervical region.
THOMPSON: Is it possible that the person in this crash might have been killed?
Mr. O'NEILL: Well, we can never say for certain just based on dummy measurements, but the forces were certainly high enough that the injuries could have produced a fatal injury.
THOMPSON: *(Voiceover)* General Motors declined to talk about this test on camera, but in a letter GM said, `To assure overall safety at a variety of speeds, it ran 72 crash tests on its minivan, including an offset test at 35 miles-an-hour.' GM wrote, "The minivan performed very well," but declined DATELINE's request to release pictures of the test or the specific results. GM and the other automakers reminded us that all their vans meet or exceed federal safety standards, and they include safety features to help avoid accidents. The car companies have also criticized the Insurance Institute saying it has a `vested interest' and cares more about cutting insurance claims than the added cost of building safer cars, that it puts too much emphasis on this one crash

test. But most of all, the automakers said, the Institute's test was too fast.

(Crash test; letter; damaged minivans)

Mr. GEORGE PARKER: I would have to classify it an ultra high-speed test, compared to the types of crashes that happen in the real world.

THOMPSON: *(Voiceover)* George Parker represents the International Association of Automobile Manufacturers.

(Mr. Parker being interviewed)

THOMPSON: Are you saying that people don't have accidents at 40 miles an hour?

Mr. PARKER: They are very rare instances of crashes at that speed. You're probably talking less than 5 percent, maybe even less than 2 percent of all of crashes—offset crashes happen at that speed.

THOMPSON: *(Voiceover)* General Motors says it's even more rare, only about four hundredths of one percent of all the accidents the federal government tracks, and that designing cars to withstand high-speed crashes could actually contribute to injuries in more frequent, low-speed accidents. The institute says it picked the 40-mile-an-hour speed because, among fatal front end accidents, that speed is common. About half of deaths happen faster and half slower than 40.

(Letter; crash tests)

THOMPSON: *(Voiceover)* Tomorrow, the Insurance Institute releases its official rankings. The Ford Windstar, with no injuries, gets a "Good." But after that, a sharp drop. Four vans rated "Marginal": the Mazda MPV, Dodge Grand Caravan, Honda Odyssey, Nissan Quest. And these rated poor: the Chevrolet Astro, Ford Aerostar, Toyota Previa. And last on the list, the Pontiac Trans Sport. It's also called the Oldsmobile Silhouette and the Chevrolet Venture.

(Insurance Institute; text of ratings)

THOMPSON: If the Ford Windstar can protect passengers adequately at 40 miles an hour, then why can't all these other minivans do as well?

Mr. PARKER: Well, I think that's not the point. I think the point is that if you are a potential purchaser or owner of one of these vehicles, that I would be very cautious about putting a lot of importance to the results of this test, because these vehicles do well in the real world.

THOMPSON: *(Voiceover)* Brian O'Neill agrees that compared to some other cars, minivans do not have as many deaths and injuries. But he says, it's not because of the way they're built, it's because the people who drive minivans are middle-aged moms and dads—statistically some of the safest drivers on the road.

(Thompson and Mr. O'Neill at Insurance Institute; minivan on road)

Mr. O'NEILL: Minivans have a good on the road record because of their drivers.

(Voiceover) What we're saying, however, is, if you're driving one of these and you're unfortunate enough to be in a collision, some of them aren't going to offer the protection they should be offering.

(Crash test)

PAULEY: The automakers say the Insurance Institute runs its tests to get publicity, and they note the tests are not used to set the car insurance rates you pay. But in spite of the criticism, the federal government wants to develop its own offset test, similar to the one you've just seen.

(Voiceover) If you're interested in detailed van-by-van test results, they're available on DATELINE's Web site at www.dateline.msnbc.com.

(Web site graphic)

PAULEY: We'll be right back.

Announcer: This is DATELINE Tuesday, for November 19th, with reports tonight from chief consumer correspondent Lea Thompson and Chris Hansen.

Still ahead, could the ValuJet crash have been prevented by a device similar to one you have right in your home?

(Announcements)

Announcer: From our studios in New York, here is Stone Phillips.

STONE PHILLIPS: The miracle and the mystery of test-tube babies.

DAVID BRINKLEY reporting: *(From old broadcast)* Good evening. The first baby ever conceived outside the mother's body was born in England.

PHILLIPS: *(Voiceover)* Louise Brown was the world's first test-tube baby. With her was born a brave new world of science and law. On occasion, in vitro fertilization has resulted in bizarre crimes.

(Video of Louise Brown being cleaned off after birth; lab workers pouring substance into petri dish)

Unidentified Woman #2: I just want to know why he did it!

PHILLIPS: *(Voiceover)* Like a doctor who secretly used his own sperm to fertilize his patients.

(Man leaving building)

Mr. WILLEM STUART: Cornflakes.

Ms. WILMA STUART: Yeah, cornflakes.

Unidentified Boy: Yeah.

NS-BODY
SAFETY LEADERSHIP TEAM (SLT)

GENERAL INTRODUCTION

AND

ACTIVITIES/ISSUES REVIEW

Product Direction Team
February 23, 1994

Minivan Operations, February 14, 1994
PVS#10\sltpdt.cvr

NS-BODY
SAFETY LEADERSHIP TEAM (SLT)

"A" PRIORITY

SAFETY FEATURE INVESTIGATION ITEMS

Accident Avoidance

- Proximity Detection/Enhancement :
  - Side Object
  - Rear Object
- Traction Control
  - Low Speed
  - Full Speed
- Front O/S Lighting Enhancement:
  - Wipers On/Headlights On
  - Illuminated Entry/Keyhole
  - Remote and Delay Light-your-way
- Rear O/S Lighting Enhancement:
  - Bright B/U Lights
  - Fast Response CHMSL/Brake Lights

Accident Survivability

- Rear Seat Headrests
- Center Rear Headrests
- Child Safety Seat:
  - Split Recline
- Off-set Impact Protection
- Side Air Bags
- Seat Belt Pre-tensioners
- Automatic Power Door Lock Release
- Fuel Shut-Off Switch

Other

- Enhanced Celular Communications
  - Telephone*
- Remote Keyless Entry
  - Locator/Panic Alert
- 5 MPH Bumper
  - Front
  - Rear

Timing	Financials: Piece Cost	Financials: Investment	Volume	Weight

Information

to be

submitted/consensed

by

Minivan

Platform

Team

Submittal timing

to be

discussed

at

PDT

*Dealer installed at present.

TAB

25

NHTSA DEFECT INVESTIGATION PROCEDURES ? : 1994/5 VS. 1999
BLATANT DUPLICITY OR LESSONS LEARNED ?

ABC News 20/20 : "Open To Danger" (October 27, 1995 - Please see Tab 8)

On October 27, 1994 an initial secret meeting was held between NHTSA and members of the Chrysler legal and management staffs. Representatives of the NHTSA Chief Counsel's office and the Office of Defects Investigation (ODI) were present. At this meeting NHTSA decided to grant Chrysler :

"an opportunity to review the material developed in the course of NHTSA's (EA94-005) investigation before the agency completes this Engineering Analysis".

This "review" occurred on November 17, 1994; in stark contrast to long-established agency practice (Tab 3).

As detailed in my October 27, 1999 letter to U.S. Attorney General Janet Reno; Chrysler, NHTSA and the **Department of Justice** then conspired to obscure the November 17, 1994 conclusion of EA94-005 :

"The latch failure is a safety defect that involves children."

Due to this conspiracy, it took a lawsuit and one year before the U.S. taxpayer would be allowed to view the EA94-005 materials and crash test videos. It was not until October 25, 1995 that NHTSA Administrator Martinez would hold a news conference, wherein lose of the lawsuit was ostensibly/officially announced, and the crash test videos were released to the media. Thee prominent example of the media coverage was the October 27, 1995 airing of *ABC News 20/20* (Tabs 1 & 2).

ABC News 20/20 : "After the Crash : Parts I & II" (July 16, 1999)

Detailed here in Tab 25 is the current NHTSA EA99-013 defect investigation regarding Chrysler minivans. This fire-hazard defect involves at least two safety standards : FMVSS-214 and FMVSS-301. NHTSA had conducted compliance testing for the 1996 to 1999 Chrysler minivans during January and February 1999. In all tests, these Chrysler minivans consistently failed the fuel system integrity tests.

The EA99-013 is still "open". The EA99-013 crash testing of the Chrysler minivans was video taped.

However, in stark contrast to the treatment that injury/death victims endured during the EA94-005 latch defect conspiracy of 1994/5; the EA99-013 crash test videos were made available to the media in July 1999 while EA99-013 was still "open". When asked by *ABC News 20/20* reporter Arnold Diaz to comment on the 1996 - 1999 Chrysler minivan fuel system defects, NHTSA Administrator Martinez proclaimed :

"Because they're under investigation I can't say anything about it."

While death/injury were **known** to be occurring during the Chrysler/NHTSA/DOJ EA94-005 conspiracy, NHTSA hid the crash test videos from the public. But five years late; during an investigation involving the very same car company, involving the very same types of vehicles; NHTSA releases the EA99-013 videos to the very same media (*ABC News 20/20*) **while confirming that it is still "open" !** This begs the question "BLATANT DUPLICITY OR LESSONS LEARNED ? "

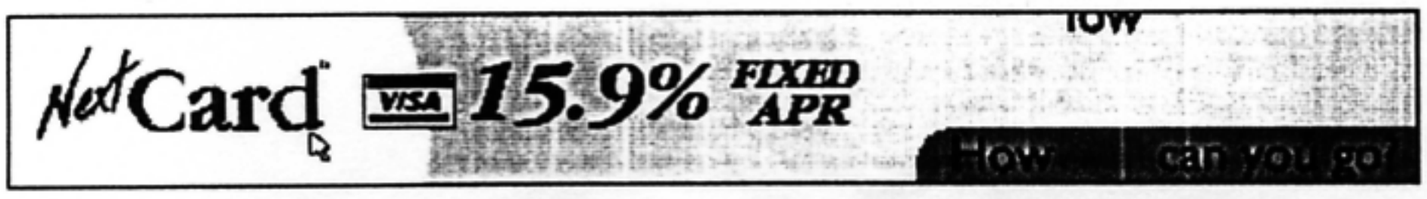

ADVERTISING
Cars.com
Classifieds
Personals
JobHunter
Homes/Apts.
Place an ad

| ►Share this story with a friend | ► Join the Autos discussion in Feedback |

Essentials
Search
Highlights
CyberSurveys
►News Talk
►Sports Talk
►Wings Talk
►Gear Talk
Horoscope
Lottery
Weather
Staff

News
Autos
►Joyrides
Business
Careers
Classrooms
Editorials
Metro/State
►Macomb
►Oakland
►Wayne
►On Detroit
Nation/World
Obituaries
►Death Notices
Technology
Voices

Sports
Sports Front
►Lions
►Pistons
►Shock
►Tigers
►Red Wings
College Sports
►U-M
►MSU
►State Colleges
High Schools
Motor Sports
Golf
Scoreboards

Features
Features Front
Entertainment
►Casino Guide
►Movie Finder
►TV Listings
Comics
Comic Books
Detroit History
Food
Games
Health
Homestyle
Next!
Pets
Religion
Wine Report

Advertising
Cars.com
Classifieds
Personals

Gas tank probe grows

U.S. intensifies GM truck, Chrysler van investigation

Company officials dispute negative federal crash tests results with Chrysler minivans, such as the Plymouth Voyager, that show a fire hazard.

By Dina ElBoghdady / Detroit News Washington Bureau

WASHINGTON -- The National Highway Traffic Safety Administration upgraded its investigation into gasoline tanks on some DaimlerChrysler AG minivans and General Motors Corp. pickups that the agency suspects may pose a fire hazard during side-impact crashes.

The probe focuses on fuel tanks of roughly 2 million DaimlerChrysler minivans from model years 1996-1999 and about 1.3 million GM S-10 and Sonoma compact pickups from model years 1994-1999.

In both cases, leakage occurred during federal crash tests in which minivans and pickups were struck by other vehicles traveling 30 miles per hour or 34 miles per hour.

The investigation was upgraded from a preliminary evaluation to an engineering analysis -- which could lead to recall if sufficient evidence is found to warrant that action, The Detroit News learned.

Both automakers said they are cooperating with the investigation. But they add that the crash test results are at odds with their own testing and don't reflect real-world experience with these vehicles.

"We have millions of these vehicles out there and we have never seen this happen -- ever," said Sue Cischke, DaimlerChrysler's vice-president of vehicle safety.

Federal documents show a three-door 1999 Dodge Caravan spilled about 11 gallons of test fuel when a hose in which gasoline travels from the retail pump into the tank pulled loose at the bottom of the tank during a January crash test. A test in December using the four-

JobHunter
Homes/Apts.
Place an ad
Home delivery

door 1999 Dodge Grand Caravan also produced fuel tank leaks.

The probe was extended to the Plymouth Voyager and Grand Voyager and the Chrysler Town and Country in case they have similar tanks.

A 1999 Chevrolet S-10 extended-cab pickup truck with a four-cylinder engine spilled 15 gallons of test fuel during a crash test, prompting a look at GM's S-10 and the Sonoma pickups.

GM put a shield at the lower rear area of the fuel storage tank in its V-6 pickups at the end of model year 1998. The shields were not added to four-cylinder pickups until December, after the federal crash tests. Under investigation are models without the shield.

Copyright 1999, The Detroit News

633496

REPORT NO.: 214-MGA-99-05
SAFETY COMPLIANCE TESTING FOR FMVSS NO. 214
"SIDE IMPACT PROTECTION"

DaimlerChrysler Corporation
1999 Dodge Caravan 3 Door
NHTSA NO: CX0305

MGA PROVING GROUNDS
5000 WARREN ROAD
BURLINGTON, WI 53105

Test Date: January 5, 1999

Report Date: January 8, 1999

FINAL REPORT

Prepared For:

U.S. DEPARTMENT OF TRANSPORTATION
NATIONAL HIGHWAY TRAFFIC SAFETY ADMINISTRATION
ENFORCEMENT
OFFICE OF VEHICLE SAFETY COMPLIANCE
400 SEVENTH STREET, SW
ROOM 6115 (NSA-30)
WASHINGTON, D.C. 20590

TECHNICAL REPORT STANDARD TITLE PAGE

1. Report No. 214-MGA-98-05	2. Government Accession No.	3. Recipient's Catalog No.
4. Title and Subtitle Final Report of FMVSS No.214 Compliance Side Impact Protection Testing of a 1999 Dodge Caravan 3 Door NHTSA No. CX0305		5. Report Date January 8, 1999 6. Performing Organization Code MGA
7. Author(s) Dave Kosloske		8. Performing Organization Report No. MGA-DOT-214-05
9. Performing Organization Name and Address MGA Research Corporation 5000 Warren Road Burlington, WI 53105		10. Work Unit No. 11. Contract or Grant No. DTNH22-97-C-11033
12. Sponsoring Agency Name and Address U.S. Department of Transportation National Highway Traffic Safety Administration Office of Vehicle Safety Compliance 400 Seventh St., S.W., Room 6115 Washington, D.C. 20590		13. Type of Report and Period Covered Final Test Report January 5, 1999 - January 8, 1999 14. Sponsoring Agency Code NSA-30
15. Supplementary Notes		

16. Abstract

A 48/24 kph 90° Impact (Moving Deformable Barrier) Compliance Test was conducted on the subject 1999 Dodge Caravan 3 Door in accordance with the specifications of the Office of Vehicle Safety Compliance Test Procedure No. TP- 214D-04 for the determination of FMVSS No. 214 Side Impact Protection compliance. The test was conducted at MGA Research Corporation in Burlington, Wisconsin, on January 5, 1999.

The impact velocity of the Moving Deformable Barrier (MDB) was 52.6 kph, and the ambient temperature at the struck side of the target vehicle at the time of impact was 21.7°C. The target vehicle post test maximum crush was 369 mm between levels 1 and 2. The test vehicle's performance follows:

	DRIVER.	LEFT REAR PASS.
Left Upper Rib (LUR) Accel., g	36	32
Left Lower Rib (LLR) Accel., g	30	35
Lower Spine (T_{12}) Accel., g	49	51
Thoracic Trauma Index (TTI)	43	43
Pelvis (PEV) Accel., g	52	95

The door on the struck side of the vehicle did not separate from the body at the hinges or latch and the opposite doors did not open during the side impact event.

17. Key Words Compliance Testing Side Impact Protection FMVSS 214 Side Impact Dummy (SID)		18. Distribution Statement Copies of this report are available from: National Highway Traffic Safety Adm. Technical Ref. Division, Room 5108 (NAD-52) 400 Seventh Street, S.W. Washington, D.C. 20590 Telephone No. 202-366-4946	
19. Security Classif. (of this report) Unclassified	20. Security Classif. (of this page) Unclassified	21. No. of Pages 293	22. Price

Form DOT F 1700.7 (8-69)

DATA SHEET 16

FUEL SYSTEM INTEGRITY POST IMPACT TEST DATA

Vehicle Year/Make/Model/Body Style: 1999/Dodge/Caravan/3 Door

Vehicle NHTSA No.: CX0305 Test Date: January 5, 1999

TEST REQUIREMENTS:

Drain the test vehicle's fuel system and operate the engine until the fuel system is dry. Add Stoddard solvent, which has been dyed purple, until 92-94% of the stated usable capacity is reached. Operate the engine to assure the Stoddard solvent is present throughout the entire fuel system.

TEST VEHICLE IMPACT TYPE: X Left Side Impact MDB 32.7 mph (52.6 kph)

FUEL SPILLAGE MEASUREMENT:

POST IMPACT TEST	TEST RESULTS	MAXIMUM ALLOWABLE
1. From impact until vehicle motion ceases	unknown	1 oz
2. For 5 minute period after vehicle motion ceases	approx. 2 gal.	5 oz
3. For next 25 minutes	approx. 9 gal.	1 oz./1 min

FUEL SPILLAGE LOCATION(S): Stoddard solvent leaked from the fuel tank at the point where the fuel filler neck separated from the tank.

Note: Post-test static rollover was not conducted because it was obvious that the fuel system integrity had been compromised.

STATE OF MICHIGAN

IN THE CIRCUIT COURT FOR THE COUNTY OF OAKLAND

CHRYSLER CORPORATION, a Delaware corporation,

Plaintiff,

-vs-

No. 94-489177-CZ
Hon. David F. Breck

PAUL SHERIDAN,

Defendant./

The deposition of ROBERT A. LUTZ, taken pursuant to the Michigan General Court Rules before Rose Ann Zaidan, a Notary Public in and for the County of Oakland, acting in the County of Washtenaw, State of Michigan, at 2101 Hubbard Drive, Ann Arbor, on Friday, June 4, 1998, commencing at or about the hour of 9:20 o'clock A. M.

APPEARANCES:

KIENBAUM, OPPERWALL, HARDY & PELTON, P.L.C.,
BY THOMAS G. KIENBAUM, ESQ., (P15945),
and ROBERT B. BROWN, ESQ., (P51378),
325 South Old Woodward Avenue, Birmingham, MI 48009, 248-645-0000, appearing on behalf of the Plaintiff.

MAZUR, AMLIN, MORGAN, MEYERS & KITTEL,
BY COURTNEY E. MORGAN, JR., ESQ., (P29137),
and MICHAEL S. MAZUR, ESQ., (P29137),
1490 First National Building, Detroit, MI 48226, 313-961-0130, appearing on behalf of the Defendant.

ALSO PRESENT: Paul Sheridan

- - -

Rose Ann Zaidan, CSR-2217, RPR

R. A. ZAIDAN & ASSOCIATES, INC.
248-643-4740

Q. Are you familiar with a change in the type of inflator used in the front air bags in the NS minivans after their introduction, sir?

A. I think we're getting into good old last paragraph of the order here, are we not?

Q. I'm just asking you whether or not you're familiar with the change.

A. Well, I'm not going to answer.

Q. Okay. Are you familiar with any scrutiny by the NHTSA of those air bags currently ongoing?

A. I'm not going to answer.

Q. Okay. Are you familiar -- does Chrysler routinely certify compliance with 214 based on F1 tests?

A. I don't know what 214 is and I no longer am sufficiently aware of the definition of F1s and I'm not going to answer.

Q. 214 is a side impact standard. Does Chrysler routinely certify compliance with MVSS 301 based upon tests where the fuel tank is empty?

A. I'm not going to answer it.

Q. Does Chrysler routinely certify compliance with 301 based upon F1 testing?

A. Not going to answer.

Q. I want you to take a look at the bottom page of

TAB

26

STATE OF MICHIGAN
IN THE CIRCUIT COURT FOR THE COUNTY OF OAKLAND

Chrysler Corporation,

Plaintiff,

v

Case No. 94-489177-CZ
Hon. David F. Breck

Paul Sheridan,

Defendant.

_____/

Thomas G. Kienbaum (P15945)
325 South Old Woodward Ave
Birmingham MI 48009
Attorney for Plaintiff

Courtney E. Morgan, Jr. (P29137)
1490 First National Building
Detroit MI 48226
Attorney for Defendant

_____/

OPINION AND ORDER REGARDING DEFENDANT'S MOTION TO SET ASIDE RECOMMENDATIONS OF NORMAN L. LIPPITT

At a session of said Court held in the City of Pontiac, County of Oakland, State of Michigan, on

APR 0 8 1999

PRESENT: HON. DAVID F. BRECK
CIRCUIT COURT JUDGE

This matter having come before the Court on Defendant's Motion to Set Aside Recommendations of Norman L. Lippitt, and having heard oral arguments and reviewed the pleadings and the applicable law, this Court issues the following Order:

IT IS HEREBY ORDERED that Defendant's Motion to Set Aside Recommendations of Norman L. Lippitt is denied, Defendant having previously agreed to his involvement.

IT IS FURTHER ORDERED that Defendant is permitted to take the depositions of the following individuals: Peter Badore, Chris Theodore, Charles Centivany, Michael Muth, Michael Pitt, Joseph St. Lawrence, Robert Mocello, Francois Castaing, Robert Lutz and Leroy Richie.

IT IS FURTHER ORDERED that the testimony during deposition shall be limited to the elements of the alleged violations of the Whistle Blower Protection Act and retaliatory discharge in violation of public policy as set forth Defendant's Second Amended Counter Claim.

IT IS FURTHER ORDERED that no questions in deposition are permitted regarding any claimed violation by Chrysler of a government law or regulation, the production or future production of a product with a safety defect, or the concealment or destruction of information concerning the production of a product with a safety defect.

IT IS FURTHER ORDERED that this discovery is to be completed within 45 days.

DAVID F. BRECK
CIRCUIT JUDGE

HON. DAVID F. BRECK
CIRCUIT COURT JUDGE

A TRUE COPY
G. WILLIAM CADDELL
Oakland County Clerk - Register of Deeds
By: _____
Deputy

TAB

27

Summary of Performance Appraisal Comments
Filed by Chrysler Executives
Covering a Two Year Evaluation Period

Subject: Paul V. Sheridan
Reference: Minivan Safety Leadership Team

"Paul (Sheridan) does a thorough, detailed, organized, and tireless job. He became an active promoter of advancing safety in the (minivan) program only slowing when the reality of the interest from management became apparent to him..."

Ronald S. Zarowitz
Manager, Safety Office, (810) 576 - 7305
October 10, 1994

"(Paul Sheridan) has directed various team efforts well, with a strong goal orientation, especially the (minivan) Safety Leadership Team..."

Mark W. Clemons
Manager, Chrysler-Plymouth Marketing, (313) 956 - 3763
October 14, 1994

"Overall I think Paul (Sheridan) has done an excellent job...He has been eager to get involved...Always very open and candid...good planning skills...Good team leader..."

Bernard E. Swanson
Executive Engineer-Minivan Platform
October 16, 1994, (810) 576 - 2908

"Paul (Sheridan) did a good job as Chairman of the Minivan Safety Leadership Team...He brings a valuable engineering perspective to his product planning role...He is willing to speak up when he disagrees, which is good..."

Scott A. Sullivan
Manager, Market Research
October 12, 1994

"I find (Paul Sheridan) to be very innovative and certainly not afraid to push the envelope. His professional yet open demeanor easily wins the respect of his colleagues. He is extremely knowledgeable, and may well be one of the best all around technical persons on staff...Paul is a valuable asset to the (minivan) platform and I rely on him to accomplish our mutual goals"

Paul T. Doolan
Engineering Programs Manager-Minivan
October 10, 1994, (810) 576 - 4837

MULTIPLE INPUT FORM – CONFIDENTIAL

The use of this form is optional. If it is used, however, the guidelines on the back of this form must be followed. Multiple input can provide supervisors with valuable, additional information to consider when completing employee appraisals and development plans. Your input regarding the employee's past year's results and behaviors is appreciated.

Employee Name Paul Sheridan Date 10-10-94

Provider Name (Optional) Ron Zaroweitz How Long Have You Worked with the Employee? 2 years

Relationship to Employee:

____ Customer ____ Supplier ✓ Team Member ____ Subordinate ____ Peer ____ Other ____

RESULTS:

Please provide a brief summary of the employee's success or difficulty in fulfilling his or her job duties related to you. Include specific examples and results.

Paul does a thorough, detailed, organized, and tireless job. He became an active promoter of advancing safety in the NS program, only slowing when the reality of the interest from management became apparent to him. He created & led NS SLT to point of making data-based recommendations to NS management.

BEHAVIORS:

Please list areas where you feel the employee excels or has opportunity for development. Keep in mind the following behaviors:

Innovation/Risk Taking Continually attempts to push forward/try something new/ be inventive.

Teamwork Very interested in team dynamics consensus-building - good leader.

Encouraging/Valuing Diversity Different backgrounds/points-of-view sought out, encouraged.

Communication/Openness/Candor Direct, honest. to the point of being blunt

Continuous Process Improvement (no basis to evaluate)

Planning/Priority Setting Organized NS SLT & ran group effectively/ efficiently. Developed plan to prioritize group objectives.

Problem Solving Creative, up to point of "hitting the wall" - then process steps.

Leadership - good · encourages group input - leads group to make progress - has vision of ultimate goal.

Customer Responsiveness (no basis to evaluate)

Technical Expertise

People Management/Development (for supervisors only)

OTHER COMMENTS OR CONCERNS:

Very strong candidate who could work on achieving "grace under fire" - temper sometimes comes through too quickly when frustrated.

Please return to Dennis Malecki (Name) by _____ (Date)

Thanks!

MULTIPLE INPUT FORM - CONFIDENTIAL

The use of this form is optional. If it is used, however, the guidelines on the back of this form must be followed. Multiple input can provide supervisors with valuable, additional information to consider when completing employee appraisals and development plans. Your input regarding the employee's past year's results and behaviors is appreciated.

Employee Name ***Paul Sheridan*** Date ***October 14, 1994***

Provider Name ***Mark Clemons*** How long have you worked with the Employee? ***2 Years***

Relationship to Employee:

Customer Supplier ***X*** Team Member Subordinate Peer Other

RESULTS:

Please provide a brief summary of the employee's success or difficulty in fulfilling his or her job duties related to you. Include specific examples and results.

Paul has been successful in his duties, especially with the NS teams that he chairs. He is also an enthusiastic team member.

BEHAVIORS:

Please list areas where you feel the employee excels or has opportunity for development. Keep in mind the following behaviors:

Innovation/Risk Taking

Teamwork
Good team player. Assumes team goals well and works aggressively to accomplish team objectives.

Encouraging/Valuing Diversity
Paul is aggressive, opinionated and persistent, traits which can be assets when moderated. However, he occasionally allows his personal views to compromise his effectiveness.
Communication/Openness/Candor
Clear and concise. Expresses views well, both orally and written.

Continuous Process Improvement

Planning/Priority Setting
Has directed various team efforts well, with a strong goal orientation (especially the NS Safety Leadership Team leading up to the NS safety research).
Problem Solving
Good analytical skills. Researches issues well. Brings facts to bear for decision making purposes.

Role Model Behavior/Leadership
Effective in chairing NS Safety Leadership, NS Complexity and NS Exterior Ornamentation teams. Leads discussions well and assists teams in developing necessary outputs.
Customer Responsiveness
Keeps commitments to teams and team members.

Technical Expertise
Displays good understanding relating to chassis items and exterior ornamentation.

People Management/Development (for supervisors only)

OTHER COMMENTS OR CONCERNS:

Please return to ***Dennis Malecki*** by ***October 19, 1994***

Name Date

THANKS!

MULTIPLE INPUT FORM – CONFIDENTIAL

The use of this form is optional. If it is used, however, the guidelines on the back of this form must be followed. Multiple input can provide supervisors with valuable, additional information to consider when completing employee appraisals and development plans. Your input regarding the employee's past year's results and behaviors is appreciated.

Employee Name Paul Sheridan **Date** 10-16-94

Provider Name (Optional) B. E. Swanson **How Long Have You Worked with the Employee?** 2+ YRS ?

Relationship to Employee:

____ Customer ____ Supplier ___+___ Team Member ____ Subordinate ____ Peer ____ Other _____

RESULTS:

Please provide a brief summary of the employee's success or difficulty in fulfilling his or her job duties related to you. Include specific examples and results.

OVERALL I THINK PAUL HAS DONE AN EXCELLENT JOB IN CHAMPIONING REDUCTION IN COMPLEXITY. FROM A CHASSIS PERSPECTIVE, HE HAS BEEN EAGER TO GET INVOLVED IN ISSUES PRESENTED TO HIM. SOMETIMES IT APPEARS HE TAKES ISSUES AS WORK OR A "PERSONAL ISSUES" RATHER THAN AN "EXPOSE THE BUSINESS" FOCUS WHICH I THINK FRUSTRATES HIM WHEN HIS VIEW IS NOT ACCEPTED OR ACTIONED ON. THIS DOES NOT APPEAR TO AFFECT HIS EFFECTIVENESS, HOWEVER, IS A SOURCE OF FRUSTRATION TO HIM.

BEHAVIORS:

Please list areas where you feel the employee excels or has opportunity for development. Keep in mind the following behaviors:

Innovation/Risk Taking

Teamwork

Encouraging/Valuing Diversity

Communication/Openness/Candor – ALWAYS VERY OPEN AND CANDID WITH ME.

Continuous Process Improvement

Planning/Priority Setting DEMONSTRATES GOOD PLANNING SKILLS.

Problem Solving

Leadership TAKE INITIATIVE TO ADDRESS ISSUES. LEADS THE CHARGE

Customer Responsiveness HAS BEEN VERY RESPONSIVE TO CHASSIS ISSUES.

Technical Expertise – ADEQUATE TO MORE THAN ADEQUATE FOR CHASSIS.

People Management/Development (for supervisors only)

OTHER COMMENTS OR CONCERNS:

PAUL HAS A TENDENCY TO GAMBLE ABOUT THINGS WHICH I THINK IS MOSTLY A "PERSONALITY" THING.

Please return to Dennis Malecki **by** _____
Name Date

Thanks! DENNIS, SORRY ABOUT THE QUALITY OF MY WRITTEN RESPONSE. I WOULD BE GLAD TO DISCUSS PAUL

GOOD TEAM LEADER. HAS DONE WELL. HIS FOR EXPANDED ITS

MULTIPLE INPUT FORM – CONFIDENTIAL

The use of this form is optional. If it is used, however, the guidelines on the back of this form must be followed. Multiple input can provide supervisors with valuable, additional information to consider when completing employee appraisals and development plans. Your input regarding the employee's past year's results and behaviors is appreciated.

Employee Name Paul Sheridan Date 10/12/94

Provider Name (Optional) Scott Sullivan How Long Have You Worked with the Employee? 15 MONTHS

Relationship to Employee:

____ Customer ____ Supplier _X_ Team Member ____ Subordinate ____ Peer ____ Other _____

RESULTS:

Please provide a brief summary of the employee's success or difficulty in fulfilling his or her job duties related to you. Include specific examples and results.

PAUL DID A GOOD JOB AS CHAIRMAN OF THE MINIVAN SAFETY LEADERSHIP TEAM DURING THE TIME I WORKED WITH THAT GROUP. HE ACTIVELY PARTICIPATES IN THE PST DISCUSSIONS, AND HE BRINGS A VALUABLE ENGINEERING PERSPECTIVE TO HIS PRODUCT PLANNING ROLE.

BEHAVIORS:

Please list areas where you feel the employee excels or has opportunity for development. Keep in mind the following behaviors:

Innovation/Risk Taking - HE IS WILLING TO SPEAK UP WHEN HE DISAGREES, WHICH IS GOOD.

Teamwork

Encouraging/Valuing Diversity

Communication/Openness/Candor - HIS ARGUMENTS ARE, AT TIMES, A BIT TOO EMOTIONAL. THIS CAN

Continuous Process Improvement WORK AGAINST HIM IN TRYING TO CONVINCE OTHERS.

Planning/Priority Setting - IN A FEW INSTANCES WITH THE SAFETY LEADERSHIP TEAM PAUL GOT

Problem Solving BOGGED DOWN IN DETAILS WHEN THE GROUP WAS READY TO MOVE

Leadership FORWARD.

Customer Responsiveness

Technical Expertise

People Management/Development (for supervisors only)

OTHER COMMENTS OR CONCERNS:

Please return to Dennis Malecki by _____
Name Date

Thanks!

MULTIPLE INPUT FORM – CONFIDENTIAL

The use of this form is optional. If it is used, however, the guidelines on the back of this form must be followed. Multiple input can provide supervisors with valuable, additional information to consider when completing employee appraisals and development plans. Your input regarding the employee's past year's results and behaviors is appreciated.

Employee Name Paul Sheridan Date 10/10/94

Provider Name (Optional) PAUL DOOLAN How Long Have You Worked with the Employee? _____

Relationship to Employee:

____ Customer ____ Supplier ✓ Team Member ____ Subordinate ____ Peer ____ Other _____

RESULTS:

Please provide a brief summary of the employee's success or difficulty in fulfilling his or her job duties related to you. Include specific examples and results.

Some specific examples of Paul's contributions include: tire & wheel plan, suspension complexity reduction matrix, powertrain plan, tire & wheel volumes, and recently exterior ornamentation items.

BEHAVIORS:

Please list areas where you feel the employee excels or has opportunity for development. Keep in mind the following behaviors:

Innovation/Risk Taking

Teamwork

Encouraging/Valuing Diversity

Communication/Openness/Candor

Continuous Process Improvement

Planning/Priority Setting

Problem Solving

Leadership

Customer Responsiveness

Technical Expertise

People Management/Development (for supervisors only)

As a fellow member on several teams with Paul, I find him to be very innovative and certainly not afraid to push the envelope. His professional yet open demeanor easily wins the respect of his colleagues. He is extremely knowledgeable, and may well be one of the best all around technical persons on staff. He is detail oriented, and works hard at his craft. His work on complexity reduction demonstrates good planning and problem solving skills. He is also a very capable communicator, both written and verbal, and appears well organized.

OTHER COMMENTS OR CONCERNS:

Paul is a valuable asset to the platform, and I rely on him to accomplish our mutual goals

Please return to Dennis Malecki by _____

Name Date

Thanks!

Critics rave about Cummins-powered Ram pickups

If a Dodge Ram outfitted with the Cummins 5.9-liter turbo diesel engine were to race a Ford or Chevy truck up a Colorado mountain road, there would be no question who would win. The Dodge Ram would sail up the mountain, while its Chevy and Ford counterparts chugged along in its dust.

In fact, in just about any endurance competition imaginable, the Dodge Ram truck would obliterate its competition.

This is not frivolous hype or propaganda generated by zealous marketing types. The example is based on testimonials by industry trade journals.

For instance, *Road Test Magazine* writes, "The Dodge-Cummins pickup outdistances its Ford and Chevy counterparts in every meaningful category."

"Dodgzilla" is a term coined by *Four Wheeler* magazine to describe the Dodge Ram pickup.

Why the acclaim? The engine powering the Dodge Ram—the Cummins diesel 5.9-liter six-cylinder turbo engine—has no equal, according to Paul Sheridan, Jeep/Truck Engineering Engine Program Manager. It's the only factory-installed turbo diesel available in a pickup.

Referred to by Sheridan as the "Ferrari of the diesel engines," the Cummins is largely responsible for the recent success of Dodge Ram trucks in the marketplace.

The Cummins engine is in nearly half of all Dodge full-size pickup trucks sold. Dodge sold 30,000 turbo diesel pickups in the 1990 model year and projects sales of 44,000 units in 1991.

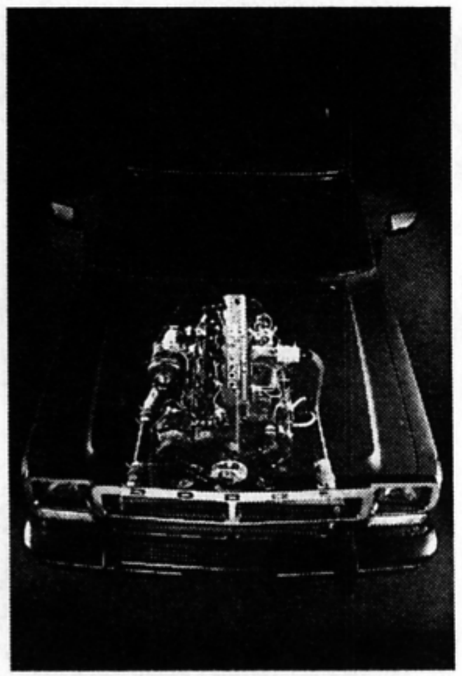

The Cummins engine is in nearly half of all Dodge full-size pickup trucks sold. Dodge sold 30,000 turbo diesel pickups in the 1990 model year and projects sales of 44,000 units in 1991.

Jerome Magid

Among the Cummins diesel team members who worked to ensure a smooth launch were, from left, Eugene Shensky, Product Change Analyst; Ken Scobel, Cummins On-Time Assembly; Walter Ralph, Vehicle Development Specialist; Troy Simonsen, Product Planning Manager; Greg Henderson, Design Aids Supervisor; and Paul Sheridan, Engine Programs Manager.

"We are approaching 50 percent of Ford's volume after only three years in the diesel business," Sheridan added. "Our problem is not demand, but supply of available engines from Cummins. We can't fill customer orders fast enough."

The 1989 model year production was sold by December 1988, and 1990 production sold out by February 1990.

"We can't determine how great the demand is, because we haven't hit the ceiling yet," Sheridan said.

A diesel engine survey found that if given the option, one out of four Ford and General Motors diesel pickup buyers would pay an extra $1,000 for a truck powered by a Cummins engine.

The engine was first used in the Dodge Ram full-size pickup trucks in 1989, but preparations to modify a Cummins diesel for the truck date back to 1985.

Eight Chrysler employees, part of the core Truck Operations group, approached the Cummins people namely because at the time the company was "the only game in town," Sheridan said. Ford was getting its diesel engines through Navistar, and General Motors manufactured its own and purchased some from Detroit Diesel.

Chrysler provided Cummins with a Dodge Ram truck and the assignment of making a Cummins diesel engine that could fit into the chassis.

Cummins completed its assignment and the engine is now available in the Ram D-250 and D-350, both two- and four-wheel drive.

"We achieved this success over the years using a skeleton crew, minimal budget and a complicated but necessary release program," Sheridan said.

In addition to offering an engine intercooler to meet strict emissions standards, the 1991-1/2 model offers a four-speed automatic overdrive transmission that will boost the truck's current top speed of 80 mph and further improve its fuel economy and performance.

December 1990
Design Engineering/Manufacturing
Cost Reduction Results

Digest

In the News

STANDARD & POOR'S placed the Big Three automakers on its CreditWatch list Jan. 9 because of a worsening economic picture.

Chrysler said, "We are, of course, disappointed... but given the difficult environment the industry is in, we can understand their concern. We know our minivans and sport utilities face increasing competition, but are confident that they remain the class of the field and able to withstand the assault."

Chrysler will have an opportunity to present its case to Standard & Poor's.

Innovation

AL BARRETT, Mark Huber, Mike Larson, Don McCutcheon and Jim Pitt represented Chrysler in accepting an award from the Society of Automotive Plastics for the company's use of plastic in body interiors. In conjunction with Entech, Rockwell and General Electric, the group developed a plastic bolster that saves $18 per vehicle and 8.3 pounds in body weight. The bolster is used in the Eagle Premier and Dodge Monaco.

People

IN THE DODGE/WJR RADIO Quest for Excellence music competition, Beth Barley took first place and won a $5,000 scholarship. She is the daughter of Lou Barley, a tool engineer from Chrysler's Mound Road Engine Plant in Detroit.

IN RECOGNITION OF

EXCELLENCE IN ACHIEVING

...to be the BEST

"Your Personal Best"

1985

Advance Product Planning Office

to be the Best Goals

PAUL V. SHERIDAN

L. A. Iacocca

E. A. Reickert

P. C. Badore

J. M. Hossack

H. E. Cook

K. S. Mack

TAB

28

MEETING REVISION NOTICE

SUBJECT: Safety Leadership Team Update

DATE: Monday, November 7, 1994

TIME: ~~11:00 - 12:00 noon~~
3:00 - 4:00 p.m.

LOCATION: T.R. Cunningham's CTC Conference Room
Executive Suite Conference Room F

CALLED BY: R.A. Winter

INVITEES:
M.W. Clemons
M.W. Crossman
T.R. Cunningham
M.T. Delahanty
W.H. Hines
N.E. Hoxsie
H.E. Kifer
K.S. Mack
D.C. Malecki
F.W. Schmidt
P.V. Sheridan
R.S. Zarowitz

Arranged by: Sue McKesson
776-2911

Intra Company Correspondence

To--Name & Department		Telephone	Date
		776-4824	October 26, 1994
	Executive Vice President - Sales & Marketing		CIMS Number
Theodor R. Cunningham	General Product Manager - Minivan		484-14-08
From--Name & Department			CIMS Number
	Chairman - Safety Leadership Team		
Paul V. Sheridan	Product Planner - Minivan Operations		482-08-02

Subject: Minivan Safety Leadership Team (SLT) - - Status Update (per your request)

STATUS

The SLT has not been meeting during the last 10 - 12 weeks. Member morale is low; they have relegated the subject to a lower priority. Please see 'Discussion' below.

BACKGROUND

The SLT was formed in March 1993, and continues to be chaired by Minivan Operations. The charter of the group was to provide the MPT with direction and priority regarding the implementation of safety features, in the context of maintaining safety leadership in the minivan segment. To accredit the SLT, membership included every relevant group, from Engineering to Competitive Analysis to Legal/Safety Office. The merits of this effort were verified via trends in the "Purchase Reasons" data for minivan owners/intenders. (This format was approved by you during a special Minivan Operations meeting in February 1993.)

The SLT workload was immediate and substantial. Early accomplishments included:

- Inputs to the Legal staff to refute the leadership claims made by Ford in their original Winstar copy.

- Coordination of standard ABS recommendation on NS-Body platform.

- Reinstatement of 5 mph rear bumper on NS-Body.

When a feature/concept was of debatable merit, or disagreement existed within or outside the SLT, both qualitative and quantitative research was employed to assist with resolution:

- Qualitative research was formulated to ascertain the overall opinions/biases of minivan customers in the category of safety. These focus groups were conducted in Chicago and San Diego to establish geographic inputs. This phase of SLT efforts was completed in November 1993.

- Quantitative research was formulated on the basis of the information provided in the November focus groups. The SLT feature questionnaire was formatted for inclusion with the advertising positioning research clinics conducted in May/June 1994. Again, geographic considerations were to be an important part of SLT recommendations, and therefore the clinics were scheduled for both the Boston and Santa Clara locations.

BACKGROUND con't

Three dominant themes emerged from the research:

- Safety is very important to the minivan segment, especially Chrysler corporate buyers.

- Safety features must be demonstrably substantial...not "gimmicks and gizmos".

- Our customers are increasingly satisfied with the safety features that protect them from frontal incidents. The execution of front seat belts, enhanced front seat position structural enhancements, and, most prominently, dual front air bags, have all contributed to this status.

Two strategies were developed in response to these themes/activities:

- There is an opportunity to enhance our position in the minivan segment by executing safety features for side related incidents , and to a slightly lesser extent rear incidents.

- Chrysler should not make overt safety leadership claims (ala Ford Windstar). Rather, we should execute substantial safety features, and allow our customers to conclude for themselves that Chrysler is the segment leader. An optimal mix of reality and image would be developed. The SLT led this discussion; now a corporate position.

Preparation for the May/June advertising positioning research involved time constraints that restricted the number/type of safety features to be researched. The SLT had documented a list of 50 - 60 items. We consolidated the list to 13 items for the Boston/Santa Clara clinics. Side-related features were prioritized. It was requested that the SLT questionnaire be limited to a 15 minute maximum. We accommodated that request.

DISCUSSION

There are three salient events that contribute to the STATUS.

The day just prior to the Boston clinic, it was requested that we remove 'side air bags' from the list. This late notice did not allow any further discussion within the SLT. 'Side air bags' had been discussed for over a year, and were thoroughly qualified/verified as a priority by the November 1993 focus groups. All represented groups to the SLT had strongly supported inclusion of 'side air bags' in the clinics. A substantial amount of last-minute work was expended to remove 'side air bags' since the question was already programmed. We are not able to make objective recommendations regarding minivan segment acceptability, cost/price sensitivity, technical approach/execution, etc. This latter deficiency continues to be problematic given intensive competitive activity/advertising on side air bags. The marketplace is generally aware of side air bags, but all related work that was proceeding on the MPT has been halted.

DISCUSSION con't

SLT membership attended both the Boston and Santa Clara research locations. To save costs, arrangements were made 3 - 4 weeks prior to the June 4 - 6 schedule in Santa Clara. On June 3 the safety research items were unilaterally removed from the Santa Clara clinic. Many SLT participants had already departed for the West coast, and therefore were not aware of this decision. If informed in a timely manner, it is highly likely that they would have chosen to save company time/expense, since their participation was now marginal or no longer required. Obviously they were "disappointed" upon arrival at the clinic. As a result we are not able to ascertain the geographic influences on the 13 safety features.

The SLT preferred to present your office with formal follow-up on the safety feature research results. This discussion would have allowed you to provide concurrence, empowerment, and specific feedback to SLT recommendations. Several of the 13 safety features submitted to the clinics were deemed to be "unprecedented" with respect to customer acceptance. Others were strongly rejected. In several cases, properties were used to demonstrate/substantiate a safety feature/concept. Only those features receiving very high scores were proposed for execution by the MPT. All appropriate areas within the MPT were involved, as were all appropriate meeting forums. These formalities involved substantial analysis/coordination/consensus prior to product plan inclusion. Engineering bulletins were subsequently written in response to the product plan updates. As of this writing, most MPT work on the SLT recommendations has been halted.

CONCLUSION

Other areas/platforms frequently look to the Minivan Platform as a precedent when embarking on a new topic. The Minivan Safety Leadership Team is a recent example. The Minivan Complexity Team is an ongoing example. There are others. However, it is not the magnitude (quantity) of our efforts that attracts attention, it is the formality (quality). Characteristically, the SLT has adhered to consensus, objectivity, and due process; financial, technical, etc. We avoid subjectivities, personal opinions, and organizational partialities. This *modis operandi* emphasizes customer preferences/requirements...our ultimate objective. SLT membership is concerned that its approach/subject is not fully endorsed, or a priority of upper management. Without this endorsement it is difficult for the SLT to deliver on the safety leadership agenda that you approved for the Chrysler minivan (i.e. NS-Body).

RECOMMENDATION

We do not believe that your office has had an adequate chance to participate in the decisions that will maintain Chrysler's momentum in safety leadership via the launch of the NS-Body. We recommend that you schedule a formal review of the work conducted to-date by the Minivan Safety Leadership Team.

cc: D. Bostwick, T. Edson, M. Levine, D. Malecki, C. Theodore, S. Torok, R. Winter, Minivan Safety Leadership Team

Perry & Haas, L.L.P.
ATTORNEYS AT LAW

2100 Frost Bank Plaza, P.O. Box 1500, Corpus Christi, Texas 78403-1500
Telephone: 512/880-7500 Facsimile: 512/887-9507
Direct Dial: 512/880-7543

July 15, 1996

Mr. Paul Sheridan
22357 Columbia Street
Dearborn, Michigan 48124-3431

Via Fax: (313) 277-5095

Re: *Gonzalez v. Chrysler*

Dear Paul:

On Friday, July 12, we had a hearing to try to release 30,000 pages of Chrysler documents, all of the depositions taken (including yours), and other materials produced in the case. The Judge basically produced it all. Here is some press coverage that relates to the same. The deposition that you gave in the case is no longer under seal and has been quoted extensively in the Dallas Morning News article. After we won the hearing, I gave them a copy of the transcript. The transcript and the videotape are now considered public record.

You may want to let Courtney know about this, as it may affect what you all want to do in terms of the next step of your lawsuit.

I assume that the above pleases you.

Very truly yours,

PERRY & HAAS, L.L.P.

Mikal C. Watts

Mikal C. Watts

MCW/jlh

Attachments

MIKAL C. WATTS
Attorney at Law

Perry & Haas is a limited liability partnership that includes professional corporations

CAUSE NO. 37,316

JOHN AND TAMMY MATTHEWS, INDIVIDUALLY AND AS NEXT FRIENDS FOR STEVI WESTON, A MINOR	§	IN THE DISTRICT COURT OF
VS.	§	ANDERSON COUNTY, TEXAS
CHARLES ORTIZ SMITH, ELKHART INDEPENDENT SCHOOL DISTRICT, CHRYSLER CORPORATION, AND ROGER CONN CHRYSLER-DODGE-PLYMOUTH-JEEP-EAGLE, INC.	§	THIRD JUDICIAL DISTRICT

ORDER
RE: EXHIBITS TO PAUL SHERIDAN DEPOSITION

On July 12, 1996 certain documents consisting of Exhibits to the Deposition of Paul Sheridan were submitted for in camera inspection. After examining the documents submitted it is ordered that:

(a) The protections claimed for Exhibits: 8, 10, 12, 22 and 23 are denied;

(b) The protections claimed for Exhibits: 11, 14, 15, 16, 17, 18, 19, 20, 21 and 50 are sustained.

(c) The Exhibits which are protected pursuant to this order shall remain sealed and filed with the papers of this cause.

(d) The Exhibits submitted which are not protected pursuant to this order are ordered to be placed in a seperate envelope and sealed by the District Clerk for 14 days from this date.

If there is no further order before that date the Clerk is then directed to unseal those records and make them available for inspection during normal business hours

Signed this 22 day of July, 1996.

O. Edelman
Presiding Judge

and
11:20 a.m.
JUL 22 1996
District Clerk
By

TAB

29

Advertising
Classifieds
Personals
Job listings
Model Homes
Place an ad

Essentials
Editorials
Horoscope
Lottery
Weather
Death Notices
CyberSurvey
Search Engine
Back Issues
Site highlights

Sections
Accent
Autos
Business
Casino Guide
Comics
Cyberia
Discovery
Food
Golf Guide
Homefinder
Homestyle
Mail from the net
Metro
Metro Center
MetroLife
Money
Movie Finder
Nation/World
Obituaries
Outlook
On Detroit
Rearview Mirror
Screens
Showtime
Sports
Sports: College
Sports: Preps
Sports: Lions
Sports: Pistons
Sports: Wings
Sports: Tigers
TV Listings
Voices

Contacts
By e-mail
Post letters to The News

Person-to-person
Staff

GM can't gag critic, court says

Supreme Court rules against automaker for whistleblower

By Larry Bivins / Detroit News Washington Bureau

WASHINGTON -- The Supreme Court cleared a path for corporate whistleblowers Tuesday by ruling against General Motors Corp.'s attempt to prevent a former employee from testifying in product liability cases.

In a unanimous decision, the justices held that a Michigan court order does not preclude former GM engineer Ronald Elwell from testifying against the automaker in other states where he has been subpoenaed.

"Michigan has no authority to shield a witness from another jurisdiction's subpoena power in a case involving persons and causes outside Michigan's governance," Justice Ruth Bader Ginsburg wrote in the court's opinion.

The ruling has enormous financial implications for the nation's largest automaker and other companies that want to bar the testimony of expert witnesses, usually former employees, in liability lawsuits that could lead to jury awards of hundreds of millions of dollars.

"There was a potential to put a gag on all these people," Clarence Ditlow, director of the Center for Auto Safety in Washington, said of the case known as Baker vs. GM. "GM was hoping to leverage this case across the country."

GM issued no formal statement. Spokesman Kyle Johnson said the company "will be guided by the Supreme Court's ruling."

That ruling stemmed from a lawsuit filed in Missouri by the sons of Beverly Garner, who died in a fiery 1990 collision involving her Chevrolet Blazer.

A trial court awarded the plaintiffs $11.3 million. An appeals court overturned the decision, saying Elwell should not have been allowed to testify because of the Michigan injunction.

Elwell is a much-sought-after witness in lawsuits involving motorists who were killed in fiery crashes blamed on faulty GM fuel tank and fuel pump designs.

Supporters of the court ruling said the decision sends a signal that whistleblowers such as Elwell have protection.

"It sends a message to GM and to other corporations that they will not be able to pay witnesses for silence and get away with it," said J. Kent Emison, attorney for the Bakers.

Jeffrey White, a lawyer with the Association of Trial Lawyers in America, said the ruling was significant for product liability cases as well as environmental, employment discrimination and patent cases.

He said companies now would be reluctant to coerce gag-order settlements with employees.

addresses

By phone
Departments and editors

Circulation
Home delivery

Search

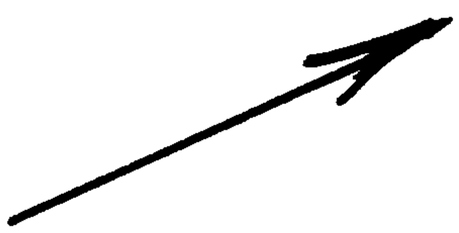

settlements with employees.

"Today the justices have told GM it can no longer gag its whistleblowers or smother their revelations, no matter how damaging they are for the company," said Public Citizen President Joan Claybrook.

GM's Johnson noted that the Supreme Court sent the case back to be retried. He said the company may pursue other tactics to prevent Elwell from testifying.

At the same time, Johnson tried to minimize the impact of Elwell as a witness, saying "there are cases where Mr. Elwell has testified and we have won the case."

One Detroit whistleblower who was buoyed by Tuesday's judgment is Paul Sheridan, a fired Chrysler Corp. employee who has spoken out about problems with the automaker's rear liftgate minivan latches.

His testimony about the latch designs played a role in a $265-million jury award against Chrysler in South Carolina, the largest against an automaker.

"In the long run, eliminating the muzzle order option will ultimately reduce product liability litigation by ensuring that safety is prioritized," Sheridan said.

His situation was mentioned in the Supreme Court case.

Copyright 1998, The Detroit News

By James Vicini

WASHINGTON (Reuters) - The Supreme Court Tuesday dealt a setback to General Motors Corp., unanimously ruling that courts in one state may not prevent courts in other states from hearing relevant testimony.

In a closely watched business case, the high court held that a ruling issued in one state may not be used to prevent relevant testimony in a separate lawsuit in another state.

Overturning a ruling that threw out an $11.3 million damage award against GM, the justices specifically said a former GM employee should be allowed to testify in a product liability case involving a fatal crash.

The justices held that a Michigan state court order does not bar the former employee from testifying in a federal trial in another state.

GM obtained a Michigan court order barring the former employee, engineer Ronald Elwell, from testifying as an expert witness in lawsuits against the company.

The order was part of a settlement of litigation between GM and Elwell, who sued the company in 1991. Elwell earlier had testified that the GM pickup truck fuel system was inferior to competing products.

In 1993 Elwell testified as a witness in a lawsuit brought in federal court in Missouri against GM by the children of Beverly Garner, a front-seat passenger in a 1985 Chevrolet Blazer who was killed in a 1990 crash.

The suit alleged that a fire after the collision had been caused by a faulty fuel pump.

Justice Ruth Bader Ginsburg said in the high court opinion that the Constitution requires courts in one state to give "full faith and credit" to court actions in other states. But, she said, the Michigan ruling does not bar Elwell's testimony.

``Michigan's judgment ... cannot reach beyond the Elwell-GM controversy to control proceedings against GM brought in other states by other parties ... asserting claims the merit of which Michigan has not considered," she said.

``Most essentially, Michigan lacks authority to control courts elsewhere by precluding them ... from determining for themselves what witnesses are competent to testify and what evidence is relevant and admissible in their search for the truth," Ginsburg said from the bench.

``Michigan, in other words, has no authority to shield a witness from a sister state's subpoena power in a case involving persons and causes outside Michigan's governance," she said.

Ginsburg added that a Michigan court decree ``cannot command obedience elsewhere on a matter the Michigan court lacks authority to resolve."

A jury awarded $11.3 million in damages to Garner's family, but a U.S. appeals court overturned the award on the grounds that the trial judge had been wrong in allowing Elwell to testify.

The Supreme Court overturned the appeals court decision.

GM had asserted in the case that the fuel pump was not faulty and was not the cause of the fire. It had also asserted that Garner was killed by collision impact injuries alone.

GM's lawyers said that if Garner's family wanted Elwell's testimony, they should have gone to Michigan and asked the court there to lift its order.

The ruling was a defeat for Whitewater independent counsel Kenneth Starr, who was listed in the briefs as GM's lead attorney. Starr has been criticized for continuing to work for private clients during the long Whitewater investigation.
^REUTERS@

12:43 01-13-98

Advertising
Classifieds
Personals
Job listings
Place an ad

Essentials
Editorials
Horoscope
Lottery
Weather
Death Notices
Search
Engine
Back Issues
Site
highlights

Sections
Accent
Autos
Business
Casino Guide
Comics
Cyberia
Discovery
Food
Golf Guide
Homestyle
Macomb
Mail from the
net
Metro
Metro Center
MetroLife
Money
Movie Finder
Nation/World
Obituaries
Outlook
On Detroit
Rearview
Mirror
Screens
Showtime
Sports
Sports:
College
Sports: Preps
Sports: Lions
Sports:
Pistons
Sports: Wings
Sports: Tigers
TV Listings
Voices

Contacts
By e-mail
Post letters

Justices review scope of state court's control

Case pivots around whether GM can stop whistleblowers from testifying against firm.

By Bradley A. Stertz / The Detroit News Washington Bureau Chief

WASHINGTON -- "So Michigan can rule the world?"

With that pointed question, Justice Ruth Bader Ginsburg and the rest of the U.S. Supreme Court tackled the high-stakes issue of whether companies like General Motors Corp. can run to their local courts to muzzle whistleblowers.

The case centers on a Wayne County state court injunction limiting testimony that Ron Elwell, a former GM engineer, can give against the automaker. Elwell has been a highly sought-after witness in lawsuits involving motorists who died in fiery crashes purportedly linked to faulty GM fuel tank and fuel pump designs.

The Supreme Court is reviewing an $11.3-million jury verdict against GM that was reversed by a judge who said Elwell should not have been allowed to testify in the Missouri case in which a woman died.

"Michigan is going to decide what evidence is going to come in all over the country?" Ginsburg asked in one of several sharp questions the panel asked GM's attorney, Paul Cappuccio.

The case -- called Baker vs. GM for the Missouri family suing the automaker -- is loaded with enough important implications to attract legal heavyweights such as Harvard constitutional law expert Laurence Tribe on the side of the Bakers and Whitewater special prosecutor Kenneth Starr on GM's team.

It also attracted Paul Sheridan who was fired by Chrysler Corp. and has since spoken out about problems with Chrysler's rear-gate minivan latches. His testimony played a role in a $262.5-million jury decision against Chrysler in South Carolina, the largest judgment any automaker has faced.

Sheridan paid his way from Dearborn to attend the Supreme Court arguments, only to spend the entire hour shivering outside in line.

Still, his interest in the case involving whistleblowers like himself was unabated. "The importance of this cannot be underestimated," Sheridan said.

The ruling that will come from the high court, perhaps by the end of this year, could affect the enforcement of such issues as child custody rulings and noncompete clauses in employment contracts if people move to different states. But the biggest impact will be felt in the arena of product liability and the ability of companies to wall off potential whistleblowers.

"It's a road map for keeping information out of the hands of the

to The News

Person-to-person
Staff addresses

By phone
Departments and editors

Circulation
Home delivery

court and the public with far-reaching implications for product safety in America," said Clarence Ditlow, director of the Center for Auto Safety in Washington. "I don't know any whistleblower in the country who can stand up to the kind of pressure" that would come down if the court decides in favor of GM.

Copyright 1997, The Detroit News

Quote :

Our job on the Safety Leadership Team was to provide recommendations to upper management that maximized the safety of past, current and future Chrysler minivan customers and passengers. Muzzle orders or secret agreements issued from behind closed doors under the guise of 'trade secrets' were never a part of our recommendations. By severely limiting the legally-premised options, the Supreme Court has sent the signal that the approach taken by the minivan safety team is more consonant with the original genius of the First Amendment of the Constitution. In the long run, eliminating the muzzle order option will ultimately reduce product liability litigation by ensuring that safety is prioritized and executed on a product development basis, as opposed to a legal basis. This in turn will maximize the competence of the product and the actual goodwill of the automaker, making the plaintiff attorney's job virtually impossible.

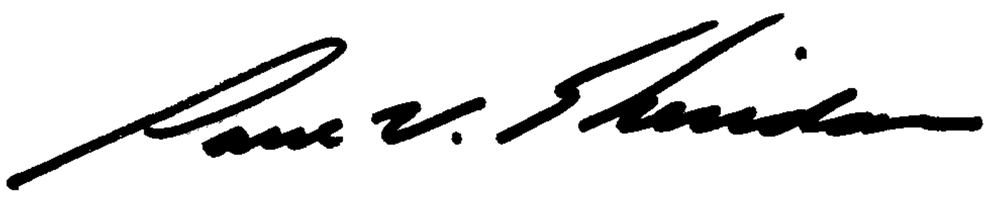

Paul V. Sheridan
Former Chairman of Two Years (1993/1994)
Chrysler Minivan Safety Leadership Team
13 January 1998

TAB

30

Federal Express Corporation
Customer Support
Domestic Trace
3875 Airways Boulevard
Module H, 4th Floor
Memphis, TN 38116

U.S. Mail: PS Box 727
Memphis, TN 38194-4643

Telephone 901-369-3600

Federal Express

May 12,1997

PAUL SHERIDAN
(313) 277-5095

Dear PAUL SHERIDAN:

This is in response to your request for proof of delivery for package tracking number 8967460810. You will find the delivery information below.

SHIPMENT INFORMATION:

Tracking No: 8967460810

Ship Date: March 21, 1996

Shipper: PAUL SHERIDAN
SHERIDAN,PAUL V
22357 COLUMBIA ST
DEARBORN, MI 48124
US

Recipient: MIKE FULLER
THE WHITE HOUSE
1600 PENNSYLVANIA AVEUE
WASHINGTON, DC 20502
US

DELIVERY INFORMATION:

Signed For By: R.BUENAFLOR

Delivered to: 1600 PENN AVE NW

Delivery Date: March 22, 1996

Delivery Time: 09:12 AM

Your business is greatly appreciated and we look forward to the opportunity of serving your future express shipping needs.

Federal Express Corporation
Worldwide Customer Service
1-800-GO-FEDEX
Reference No: 0501033017

TAB

31

Blue Cross
Blue Shield
of Michigan

March 29, 1995

BCBS of Michigan
Chrysler COBRA Unit, B463
600 Lafayette East
Detroit, Mi 48226
(810) 354-8420

Mr. Paul V. Sheridan
22357 Columbia
Dearborn, Mi 48124-3431

Account Number: 198421

Dear Mr. Sheridan:

This is to inform you that we are in receipt of your COBRA Enrollment Form.

After reviewing your enrollment form, we find that you and any dependents are ineligible for COBRA. This is due to the determination by your former employer, Chrysler Corporation, that for purposes of COBRA, your dismissal was as a result of gross misconduct.

Accordingly, you will receive no further correspondence from us on this matter.

Sincerely,

Michael Mattei
Administrator
Chrysler Membership Services

CHRYSLER SALARIED EMPLOYEES' SAVINGS PLAN

April 09, 1997

Soc. Sec. No. 131-42-3183

PAUL V SHERIDAN
22357 COLUMBIA
DEARBORN MI 48124-3431

700760
01925-01

Dear PAUL V SHERIDAN:

We have recently received notice that you have terminated your employment with Chrysler Corporation. You have the following options:

- **I.** If the vested value of your account is greater than $3,500.00, you can leave your assets in the Plan until the earlier of:

  a) March 1st of the calendar year in which you attain age 71 1/2, or
  b) you request a total distribution.

  You may also request partial withdrawals from your account in accordance with the provisions of the Plan.

- **II.** If your vested account balance is $3,500.00 or less, your account will automatically be paid out on the last business day of the third month following the month in which you terminated your employment. You will receive a separate notification regarding the distribution of your account if you do not request a total distribution.

  You may request a total distribution or partial withdrawal from your account prior to the automatic distribution. You may elect to receive your total distribution or partial withdrawal in cash only, in stock only, or a combination of both.

If you have an outstanding loan balance, you may continue making loan repayments by sending your check or money order and the Check Deposit Form directly to the Merrill Lynch Customer Service Center each month.

If you want to speak with a Customer Service Representative regarding your distribution options or loan repayments, or if you want to request a total distribution or partial withdrawal from your account, please call the Merrill Lynch Customer Service Center toll-free at 1-800-483-7283 (SAVE) any business day between 8:00 am and 7:00 pm Eastern Time.

Merrill Lynch Group Employee Services

Merrill Lynch

Criminal Gross Negligence

"Gross negligence" is culpable or criminal when accompanied by acts of commission or omission of a wanton or willful nature, showing a reckless or indifferent disregard of the rights of others, under circumstances reasonably calculated to produce injury, or which make it not improbable that injury will be occasioned, and the offender knows or is charged with knowledge of the probable result of his acts; "culpable" meaning deserving of blame or censure.

Bell v. Commonwealth, 170 Va. 597, 195 S.E. 675, 681.

END OF DOCUMENT

ATTACHMENT G

EXPERT WITNESS REPORT - 2 January 2012 REVISION

Kline v. Loman Auto Group, Victoria Morgan-Alcala, et al.

Page Range 69

Pages 249 - 317

CENTER FOR AUTO SAFETY
1825 CONNECTICUT AVENUE NW SUITE 330 WASHINGTON DC 20009-5708
202-328-7700 ◆ www.autosafety.org

October 2, 2009

Ronald Medford, Acting Deputy Administrator
National Highway Traffic Safety Administration
1200 New Jersey Avenue SE
Washington DC 20590

PETITION

Dear Deputy Administrator Medford:

The Center for Auto Safety (CAS) petitions the National Highway Traffic Safety Administration (NHTSA) to initiate a defect investigation into and recall all 1993-2004 Jeep Grand Cherokee with a fuel tank located behind the rear axle. Unlike the earlier Jeep Cherokee, the fuel tank of the Grand Cherokee is plastic and extends below the rear bumper so there is nothing to protect the tank from a direct hit in a rollover or by a vehicle with a low front profile or one lowered by pre-impact braking.

The design is so bad that Chrysler frequently settles lawsuits without extensive discovery and subject to confidentiality agreements. A search of NHTSA's FARS files for fatal fire crashes where there was a fire occurrence in a 1993-2004 Jeep Grand Cherokee from calendar year 1992 through 2008 found 172 fatal fire crashes with 254 fatalities. (Attachment A.) With an additional known fatal fire crash in 2009, there have been at least 44 crashes with 64 fatalities where the Most Harmful Event is fire.[1] (Attachment B.) In comparison, NHTSA reported a total of 38 fire crashes involving only 26 fire deaths in the Ford Pinto when it issued its initial defect report in May 1978. (Attachment C.)

The fuel system in the 1993-04 Grand Cherokee is defectively designed in that it contains a plastic fuel tank subject to rupture, degrades in performance over time, a fuel filler neck that tears off in a range of crashes, a hostile environment with sharp objects such as suspension bolts that can puncture the tank, extends below the bumper and is unshielded although Chrysler offers a optional 3/16" steel shield as a "skid plate" for off road use which would protect the tank in rear impacts where there is pre-crash braking of the striking vehicle. Similar shields are offered in the aftermarket by companies like Quadratec and take advantage of OEM holes in the frame rail to mount the shields.[2]

With funding from General Motors, the Motor Vehicle Fire Research Institute (MVFRI) has performed detailed technical assignments of the fuel tanks and fuel systems in motor vehicles. As pointed out in the assessment of the 2003 Grand Cherokee, the rear sway bar link bolt is only

[1] This excludes FARS Case 60718 on March 16, 1996 in California involving a crash between a 1996 Grand Cherokee and a classic 1971 Ford Mustang which also had a known fuel tank hazard.

[2] http://www.quadratec.com/products/12500_301.htm

3 centimeters away from the plastic tank and could easily puncture the tank in a crash.[3] MVFRI also found that plastic fuel tanks, particularly those like the 1993-04 Grand Cherokee located behind the rear axle, degraded in performance over time and were more subject to leakage in crashes.[4]

After it became a merged company with Mercedes, DaimlerChrysler moved the fuel tank in board of the rear axle in 2005 and shielded it. Since the relocation of the fuel tank in 2005 and later Grand Cherokees, there has only been one fatal fire crash in the redesigned vehicle. And that fire occurred after both occupants had been ejected in a rollover of a 2008 Grand Cherokee so that the deaths were not caused by fire.

Due to confidential settlements, the details of most lawsuits are not available. What is available demonstrates the existence of a safety defect in this vehicle. In Smith v Chrysler, the attorneys identified a common hazard as the location of the tank and a filler neck that easily torn off in a crash as fire hazards. In this case, a 2001 Grand Cherokee was beginning to go through a green light when it was struck in the rear by a Town Car traveling at only 20 to 25 miles per hour. (Attachment E.) In FARS case 360720 in Long Island NY on September 1, 1999, a stopped 1997 Grand Cherokee was struck from behind by a braking Toyota MR2. Two sisters in the back of the Grand Cherokee were severely burned when they could not get out of the Jeep due to jammed doors. The driver of the MR2, a gardener from Whitmore's, was fatally burned as he was enveloped by the burning fuel from the ruptured tank of the Grand Cherokee.

Susan Kline of New Jersey was in a 1996 Grand Cherokee when it was struck from behind by a 2004 Toyota Sienna. The doors on the Jeep jammed in the impact. Mrs. Kline climbed from the driver side to the passenger side trying to get out of the burning vehicle but was unsuccessful. Her skeletal body was found in the passenger seat. (Attachment F.) This crash and the Long Island crash both demonstrate the unique hazards of an unshielded tank extending below the rear bumper where it can be engaged by the lowered front of a striking vehicle and shoved up into the structure of the vehicle above the tank and ruptured. The low hanging, exposed fuel tank of the 1993-04 Grand Cherokee is also particular vulnerable in rollover crashes where it can strike fixed objects as it rolls. Later model Grand Cherokees have a 1milimeter brush guard that is cosmetic and offers no protection. The optional skid plate offered by Chrysler and aftermarket manufacturers is three times as thick and provides protection in such crashes.

Just like the 1971-76 Ford Pinto and 1973-87 General Motors in which NHTSA made initial determinations of safety defects despite both vehicles meeting FMVSS 301, the Grand Cherokee purportedly met FMVSS 301 although early 2002 models were subject to a non-compliance recall, 02V-032. However, as show above the Grand Cherokee contains safety defects not covered by the performance requirements of FMVSS 301 and should be recalled.

Ironically, New Chrysler tried to escape liability for all future Grand Cherokee crashes occurring after the bankruptcy where the vehicle was sold before the bankruptcy. Just days after the bankruptcy, Rodney Wood was killed in his 2004 Grand Cherokee on July 10, 2009 when it was

[3] www.mvfri.org/Contracts/Final%20Reports/Biokinetics-Phase-II/ReportTool/vehiclefiles/index.html#2.

[4] K Digges, et al, "Fire Safety Performance in Crashes," ESV Conference 2003. (Attachment D.)

hit by a transit bus.[5] The autopsy showed he died by fire, not by the trauma of the impact. Under intense public pressure, New Chrysler relented and agreed to cover future product liability losses. (Attachment H.) However New Chrysler still refused to accept responsibility for victims like Susan Klein whose tragic crashes occurred prior to the bankruptcy.

The 1993-04 Grand Cherokee has a fatal crash fire occurrence rate that is about four times higher than SUVs made by other companies. Comparing the 1993-04 Grand Cherokee with the exposed rear fuel tank to the 2005 and later Grand Cherokee with the shielded fuel tank in front of rear axle in the first five years of use for both vehicles so that it's an apples to apples comparison, the defective old Grand Cherokee has a fatal fire rate six times higher than the new Grand Cherokee.

To protect the public from more fire deaths and injuries in the 1993-04 Grand Cherokee as they continue to crash and burn, the Center for Auto Safety requests an immediate recall.

Respectfully submitted,

Clarence M. Ditlow

[5] Attachment G is a copy of the initial police report.

Attachment A
MY 1993-2008 Jeep Grand Cherokee Fatal Fire Crashes, 1992-2008

MY 1993-2008 Jeep Grand Cherokee Fatal Fire Crashes, 1992-2008

This table includes known fire crashes obtained from NHTSA's Fatal Analysis Crash System (FARS) for Calendar Years 1992-2008 and from public records for other years and for crashes not listed in FARS. Where FARS indicates fire is the most harmful event, that is indicated. Where FARS indicates vehicle in transport, striking tree or other object, that is indicated.

Crash Date by State	Name	City/County	Road	Deaths	Make/Model/Year	FARS #
Alabama						
09/26/01**	FARS (overturn)	Blount Co.	US-SR74	2	2000 Grand Cherokee	10627
04/12/06[F]	FARS	Montgomery	5466	1	2004 Grand Cherokee	10243
04/25/07[F]	FARS	Macon Co.	I-85	1	1993 Grand Cherokee	10270
Alaska						
10/12/02*	FARS	Kenai Peninsula	I-A3-2 Seward	2	2000 Grand Cherokee	20053
Arizona						
02/01/98[F]	FARS	Gila Co.	Old Dripping Springs	1	1993 Grand Cherokee	40059
08/18/98**	FARS (bridge rail)	Mohave Co.	I-15	1	1995 Grand Cherokee	40506
03/13/01[F]	FARS	Mohave Co.	I-40	2	1994 Grand Cherokee	40104
11/26/06*†(1)	FARS	Surprise	US-60 R.H. Johnson Blvd.	1	1995 Grand Cherokee	40874
Arkansas						
09/14/04*†(1)	FARS	Carroll Co.	US-62-05	2	1999 Grand Cherokee	50451
California						
03/06/96*†(1)	FARS	Indio	Country Club Dr.	2	1993 Grand Cherokee	60665
03/16/96[F]†(5)	FARS	Carson	91	5	1996 Grand Cherokee	60718
07/07/96[F]†(1)	FARS	Poway	Espola Rd.	1	1993 Grand Cherokee	61698
06/14/98**†(1)	FARS (barrier)	Victorville	I-15	1	1993 Grand Cherokee	60918
10/27/99[F]	Young Sup Lee	Los Angeles	SR-170	1	1998 Grand Cherokee	62795
05/07/00[F]	FARS	Orange Co.	SR-241	1	1993 Grand Cherokee	60499
07/20/01[F]	FARS	San Bernardino Co.	I-10	1	1994 Grand Cherokee	61708
08/07/01**	FARS (tree)	Los Gatos	SR-17	1	1998 Grand Cherokee	62067
03/23/02*†(1)	FARS	Sutter Co.	SR-99	2	1995 Grand Cherokee	61045
07/13/02**	FARS	San Luis Obispo Co.	Orcutt Rd.	1	2000 Grand Cherokee	60896
08/30/02[F]	FARS	Bakersfield	SR-58	1	1993 Grand Cherokee	62653
10/11/02**	FARS (overturn)	Fresno Co.	I-5	1	1993 Grand Cherokee	62779
10/04/03*	FARS	Anaheim	S. Harbor Blvd.	2	2004 Grand Cherokee	62897
11/27/03**	FARS (utility pole)	Commerce	Slauson Ave.	1	1996 Grand Cherokee	63251
02/05/04*	FARS	San Bernardino Co.	I-15	1	1995 Grand Cherokee	60339
05/26/04**†(2)	FARS (overturn)	Vacaville	I-80	4	2004 Grand Cherokee	61401
06/08/04**	FARS (parked vehicle)	Riverside Co.	I-10	1	1997 Grand Cherokee	61466
08/18/05[F]	James Lindskog	Oceanside	Vista Way	1	1994 Grand Cherokee	63236
05/24/06[F]†(1)	FARS	Orange Co.	SR-241	2	2001 Grand Cherokee	61349

Crash Date by State	Name	City/County	Road	Deaths	Make/Model/Year	FARS #
06/25/06**	FARS (tree)	Sonoma Co.	Petrified Forest Rd. Sharp Rd.	1	1993 Grand Cherokee	62934
Colorado						
07/24/94*	FARS	Denver	Martin Luther King Blvd.	1	1994 Grand Cherokee	80258
09/02/02**	FARS (overturn)	Douglas Co.	SR-470	1	1993 Grand Cherokee	80460
01/10/05[F]	FARS	Mesa Co.	Rim Rock Dr.	1	2004 Grand Cherokee	80025
07/06/08**	FARS (boulder)	Garfield Co.	US-6	1	1997 Grand Cherokee	80229
Connecticut						
04/10/97**	FARS (tree)	Washington	199	1	1994 Grand Cherokee	90062
04/19/02**	FARS (tree)	Hamden	New Rd.	1	1994 Grand Cherokee	90113
Delaware						
09/11/03*	FARS	Sussex Co.	CR321	1	1993 Grand Cherokee	100090
D.C.						
Florida						
11/16/98*†(2)	FARS	Hillsborough Co.	SR580	2	1998 Grand Cherokee	122093
11/17/01**	FARS (overturn)	Jacksonville	I-295	1	1996 Grand Cherokee	122302
09/05/07[F]	FARS	N/A	SR-944 32nd Ave.	2	1998 Grand Cherokee	122577
Georgia						
12/04/97*	FARS	Wilkes Co.	SR10	1	1997 Grand Cherokee	131268
07/14/98*	FARS	Echols Co.	US-SR89	3	1993 Grand Cherokee	130723
12/13/98**	FARS (tree)	Forsyth Co.	SR-371	1	1996 Grand Cherokee	131315
05/30/99**	FARS (embankment)	Jones Co.	US-129(SR-11)	2	1994 Grand Cherokee	130444
08/13/01**	FARS (barrier)	DeKalb Co.	I-20 (SR 402)	1	1998 Grand Cherokee	130795
10/30/04*†(4)	FARS	Tift Co.	I-75	4	1999 Grand Cherokee	131171
03/08/05[F]	FARS	Paulding Co.	N/A	1	1999 Grand Cherokee	130196
03/09/05[F]	FARS	Macon Co.	SR-49	1	1997 Grand Cherokee	130197
03/24/05*	FARS	Barrow Co.	SR-11	1	1993 Grand Cherokee	130251
06/20/06*	FARS	Polk	SR-101	1	2003 Grand Cherokee	130713
09/04/07**	FARS (overturn)	McDuffie Co.	SR-223	1	1998 Grand Cherokee	130958
Illinois						
09/04/00[F]	Nguyen, Bui, Vo, Prith	Chicago	I-90/94	6	1993 Grand Cherokee	170827
03/02/01*	FARS	Elk Grove Village	Thorndale Ave.	1	1998 Grand Cherokee	170153
08/12/02**	FARS (tree)	Barrington Hills	Spring Creek Rd.	1	1998 Grand Cherokee	170755
03/16/03*	FARS	Livingston Co.	SR-17	1	1994 Grand Cherokee	170248

Crash Date by State	Name	City/County	Road	Deaths	Make/Model/Year	FARS #
10/11/03*†(1)	FARS	Union Co.	I-57	2	1996 Grand Cherokee	171040
02/16/04*	FARS	Kankakee Co.	SR-113 7000 West	2	1999 Grand Cherokee	170112
06/02/05*†(1)	FARS	Coles Co.	SR-16	2	1999 Grand Cherokee	170556
10/23/05*†(1)	FARS	Iroquois Co.	I-57	1	1998 Grand Cherokee	170921
01/04/06*†(1)	FARS	South Elgin	SR-25	2	2001 Grand Cherokee	170006
03/18/07**	FARS (overturn)	Du Page Co.	I-290 WB Ramp to 355S	2	1995 Grand Cherokee	170143
10/16/07[F]	FARS	La Salle Co.	I-39	2	1993 Grand Cherokee	170830
Indiana						
04/27/98*†(1)	FARS	Clay Co.	I-70	3	1997 Grand Cherokee	180232
09/16/04[F]	FARS	Warrick Co.	I-64	1	2004 Grand Cherokee	180705
11/13/04[F]	FARS	Noble Co.	US-33	4	1997 Grand Cherokee	180723
10/10/08**	FARS (tree)	Taylorsville	I-65	1	1994 Grand Cherokee	180552
Iowa						
09/07/01**	FARS (overturn)	Patterson	US-92	1`	2001 Grand Cherokee	190254
Kentucky						
02/13/00[F]	FARS	Bourbon Co.	Vemont Ln.	1	1997 Grand Cherokee	210052
08/07/06*†(1)	FARS	Boone Co.	SR-536	1	1998 Grand Cherokee	210489
Louisiana						
08/31/00*	FARS	Livingston Co.	I-12	1	1997 Grand Cherokee	220509
12/10/00*	FARS	St. Martin Co.	I-10	2	1997 Grand Cherokee	220771
07/20/03[F]†(3)	FARS	St. Martin Co.	I-10	5	2000 Grand Cherokee	220401
07/16/04**	FARS (utility pole)	Bossier City	US-80 SR-72	2	1999 Grand Cherokee	220414
10/09/04**	FARS (tree)	Franklin Co.	SR-4 School St.	1	1995 Grand Cherokee	220625
Maryland						
11/29/98*	FARS	Baltimore Co.	SR-147	2	1993 Grand Cherokee	240486
Massachusetts						
03/04/07**	FARS (overturn)	Centerville	SR-28 Harrison Road	2	2004 Grand Cherokee	250100
04/29/07**	FARS (tree)	South Easton	SR-106	1	1993 Grand Cherokee	250070
Michigan						
12/04/97*	FARS	Dickinson Co.	95	1	1994 Grand Cherokee	261050
01/03/03**	FARS (tree)	Ottawa Co.	Lakewood Blvd.	1	1993 Grand Cherokee	260036
04/30/05[F]†(1)	FARS	Oakland Co.	I-75	3	2004 Grand Cherokee	260239
08/16/08**	FARS (overturn)	Kalkaska Co.	Plum Valley Rd.	1	1996 Grand Cherokee	260547

Crash Date by State	Name	City/County	Road	Deaths	Make/Model/Year	FARS #
Minnesota						
02/09/98*	FARS	Carlton Co.	SR-33	1	1994 Grand Cherokee	270039
11/15/98*†(1)	FARS	Maple Grove	I-94	1	1993 Grand Cherokee	270520
11/03/02*	FARS	Scott Co.	I-35	1	2001 Grand Cherokee	270542
04/15/03*	FARS	Aitkin Co.	28	1	2000 Grand Cherokee	270128
07/14/03*†(1)	FARS	Maple Grove	I-94	1	1993 Grand Cherokee	270274
12/29/03**	FARS (overturn)	Lac Qui Parle Co.	T-148	1	1995 Grand Cherokee	270511
06/06/04**	FARS (overturn)	Washington Co.	T92	1	1999 Grand Cherokee	270160
05/24/05**	FARS (overturn)	Carver Co.	13	4	1994 Grand Cherokee	270148
01/27/06*	FARS	Brown Co.	25	1	2004 Grand Cherokee	270038
03/21/08*†(1)	FARS	St. Louis Co.	SR-169 CR88	2	1995 Grand Cherokee	270070
Mississippi						
12/27/99*	FARS	Hancock Co.	I-10	3	1995 Grand Cherokee	280793
10/08/05**	FARS (tree)	Tishomingo Co.	US-72	1	1999 Grand Cherokee	280587
Missouri						
11/13/98**	FARS (overturn)	Gasconade Co.	SR-KK	1	1996 Grand Cherokee	290877
01/23/00*†(7)	FARS	Platte Co.	I-29	10	1996 Grand Cherokee	290069
12/03/00**	FARS (tree)	Greene Co.	SR-13	3	1995 Grand Cherokee	290907
08/02/02*†(1)	FARS	Camden Co.	SR-C	1	1996 Grand Cherokee	290600
09/04/02*†(1)	FARS	Maryland Heights	I-270	1	1997 Grand Cherokee	290695
11/17/02**	FARS (tree)	Kansas City	63rd St.	1	1995 Grand Cherokee	290923
06/05/04**	FARS (overturn)	St. Louis	Lee Ave. Fair Ave.	1	1995 Grand Cherokee	290473
06/14/06*	FARS	Kennett	US-412	1	1997 Grand Cherokee	290392
02/01/08*†(1)	FARS	Osage Co.	US-50	1	1997 Grand Cherokee	290069
Nebraska						
12/19/06F†(1)	FARS	Pierce Co.	553 Ave. 849 Rd.	1	2000 Grand Cherokee	310215
06/24/08**	FARS (overturn)	Dawes Co.	Slim Buttes Rd.	1	1998 Grand Cherokee	310085
Nevada						
New Hampshire						
07/21/00*†(1)	FARS	Hampton	SR-101	1	1994 Grand Cherokee	330066
New Jersey						
01/05/01**	FARS (other object)	Gloucester Co.	Cedar Swamp Rd.	1	1996 Grand Cherokee	340016

Crash Date by State	Name	City/County	Road	Deaths	Make/Model/Year	FARS #
09/23/05**	FARS (parked veh.)	Union	I-78	1	1998 Grand Cherokee	340462
03/31/06*	FARS	Mansfield	US-130	1	1999 Grand Cherokee	340144
02/24/07[F]	FARS	Parsippany	I-287	1	1996 Grand Cherokee	340080
New Mexico						
03/08/02*†(7)	FARS	Guadalupe Co.	I-40	7	1999 Grand Cherokee	350350
New York						
08/21/99[F]	FARS	Henrietta	I-390	1	1996 Grand Cherokee	360956
09/01/99*†(1)	FARS	Southampton	SR-27	1	1997 Grand Cherokee	360720
09/02/99**	FARS (overturn)	East Moriches	SR-27	1	1997 Grand Cherokee	360153
12/19/02**	FARS (parked veh.)	Yonkers	I-87	1	2002 Grand Cherokee	361116
03/14/04*†(1)	FARS	Wyoming Co.	CR-13 CR-16	1	1993 Grand Cherokee	360170
08/14/04**†(1)	FARS (overturn)	Palmyra	SR-21	1	1994 Grand Cherokee	360847
12/17/06[F]	FARS	Greenfield Center	SR-9	1	1996 Grand Cherokee	361158
08/15/07[F]	FARS	Duanesburg	I-88	1	1993 Grand Cherokee	360655
06/19/08[F]	FARS	Churubusco	River Rd.	1	2004 Grand Cherokee	360417
North Carolina						
12/19/99**	FARS (tree)	Columbus Co.	US-74-76	1	1994 Grand Cherokee	371297
03/09/02*†(2)	FARS	Nash Co.	US-64	2	1998 Grand Cherokee	370211
North Dakota						
07/24/06**	FARS (overturn)	Stark Co.	SR-10 114th Ave. SW	1	1993 Grand Cherokee	380051
Ohio						
07/30/95**	FARS (culvert)	Hilliard	Hayden Run Road	1	1993 Grand Cherokee	390650
09/26/97[F]	FARS	Wood Co.	SR65	1	1993 Grand Cherokee	390948
09/05/98*	FARS	Delaware Co.	US-42	1	1996 Grand Cherokee	390810
12/17/98*	FARS	Guernsey Co.	I-70	1	1993 Grand Cherokee	391178
11/23/99*†(2)	FARS	Tuscarawas Co.	I-77	2	1996 Grand Cherokee	391139
03/24/01**	FARS (tree)	Chillicothe	Belleview Ave.	1	1996 Grand Cherokee	390067
06/29/02*	FARS	Sandusky Co.	SR-600	1	1997 Grand Cherokee	390544
05/28/03*†(1)	FARS	Lawrence Co.	SR-378	1	1998 Grand Cherokee	390409
11/29/03*	FARS	Lakeview	US-33	1	1999 Grand Cherokee	391018
Oklahoma						
05/26/01[F]†(1)	FARS	Oklahoma City	S. Choctaw Rd.	2	1993 Grand Cherokee	400185

Crash Date by State	Name	City/County	Road	Deaths	Make/Model/Year	FARS #
Oregon						
09/22/95*	FARS	Grant Co.	5	1	1993 Grand Cherokee	410353
09/20/97**	FARS (overturn)		205/DOT440	2	1994 Grand Cherokee	410303
Pennsylvania						
10/24/98**	FARS (tree)	Franklin Co.	I-76	2	1998 Grand Cherokee	421049
03/05/00[F]	FARS	Bucks Co.	SR-309	1	1993 Grand Cherokee	420157
09/21/03*†(1)	FARS	Clinton Co.	SR-120	2	1994 Grand Cherokee	421054
02/27/04*	FARS	York Co.	I-83	2	2000 Grand Cherokee	420293
07/03/05**	FARS (tree)	Philadelphia	SR-4013	1	1993 Grand Cherokee	420613
04/05/06**	FARS (overturn)	Clarion Co.	Nickleville Rd.	1	1995 Grand Cherokee	420249
11/30/06*	FARS	Warren Co.	SR-0059	1	1995 Grand Cherokee	421006
11/12/07*†(1)	FARS	Lackawanna Co.	SR-435	1	2000 Grand Cherokee	421144
02/16/08**	FARS (tree)	Erie Co.	SR-5	1	2002 Grand Cherokee	420105
Rhode Island						
07/12/02**	FARS (tree)	Scituate	SR-116	1	1998 Grand Cherokee	440023
South Carolina						
08/06/99[F]	FARS	Marlboro Co.	259	2	1993 Grand Cherokee	450527
05/21/00[F]	FARS	Hampton	SR-68	1	1994 Grand Cherokee	450396
04/25/05*	FARS	Richland Co.	I-20 SR-277	1	1998 Grand Cherokee	450360
07/07/08[F]	FARS	Georgetown Co.	US-17 545	1	1996 Grand Cherokee	450425
South Dakota						
03/23/07**	FARS (overturn)	Moody Co.	SR-34	1	1998 Grand Cherokee	460021
Tennessee						
08/31/01[F]	FARS	Jackson	McClellan Rd.	1	1999 Grand Cherokee	470731
08/31/02[F]	FARS	Lawrence Co.	Old Jackson Hwy.	1	1994 Grand Cherokee	470669
05/29/04[F]	FARS	Germantown	Stout Rd.	1	1996 Grand Cherokee	471036
08/01/05**	FARS (bridge pier)	Kingsport	I-181	1	1997 Grand Cherokee	471107
11/18/06*†(1)	FARS	Wilson Co.	Saundersville Rd. Cedar Creek Village	1	1998 Grand Cherokee	471136
12/16/06**	FARS (tree)	Mount Juliet	South Greenhill Rd.	1	1999 Grand Cherokee	470904
Texas						

Crash Date by State	Name	City/County	Road	Deaths	Make/Model/Year	FARS #
06/22/97*	FARS	Cass Co.	59	1	1996 Grand Cherokee	481932
01/16/98[F]	FARS	Brazoria Co.	SR-288	1	1994 Grand Cherokee	480087
11/11/00**	FARS (tree)	Gonzales Co.	SR-97	1	1997 Grand Cherokee	482644
06/09/04[F]	FARS	Victoria Co.	US-77	1	2002 Grand Cherokee	481205
12/12/04*†(1)	FARS	Dallas	I-35E	1	1998 Grand Cherokee	483248
08/06/05[F]	FARS	Bullard	FM344	1	1996 Grand Cherokee	481685
04/28/06*	FARS	Dallas	I-30	2	2000 Grand Cherokee	480867
Vermont						
04/10/00*	FARS	Swanton	I-89	1	1998 Grand Cherokee	500019
09/11/08*	FARS	Waterbury	SR-100	1	1998 Grand Cherokee	500049
Virginia						
08/08/03*	FARS	Washington Co.	SR-75	1	1998 Grand Cherokee	510627
Washington						
03/15/06**	FARS (tree)	Auburn	SR-164	2	1995 Grand Cherokee	530101
West Virginia						
12/06/03**	FARS (tree)	Kanawha Co.	US-60	1	1994 Grand Cherokee	540342
09/30/06[F]	FARS	Charleston	Hickory Rd. Overbrook Rd.	1	1998 Grand Cherokee	540269
Wisconsin						
05/18/03[F]	FARS	Grant Co.	SR-133	1	1996 Grand Cherokee	550248
07/03/04**	FARS (tree)	Columbia	Hopkins Rd.	1	1995 Grand Cherokee	550318
07/03/07[F]	FARS	Nashotah	SR-16	1	2001 Grand Cherokee	550300
09/09/07**	FARS (overturn)	Greenfield	I-43	1	1994 Grand Cherokee	550455
Wyoming						
04/04/03*	FARS	Converse Co.	I-25	1	1993 Grand Cherokee	560022

[F] Indicated in FARS as most harmful: "fire/explosion."
*** Indicated in FARS as most harmful: "motor vehicle in transport" or "motor vehicle in transport in other roadway."**
**** Item in parentheses is most harmful event as indicated in FARS.**
[F-A] Fire listed as cause of in autopsy report or certificate
[F-L] Fire indicated as cause of in litigation.
[F-R] Fire indicated as cause of in accident report.
† Fatality(s) (#) occurred in bullet vehicle

Attachment B
MY 1993-2008 Jeep Grand Cherokee Fatal Fire Crashes with Fire/Explosion as Most Harmful Event, 1992-2008

MY 1993-2008 Jeep Grand Cherokee Fatal Fire Crashes with Most Harmful Event as Fire/Explosion, 1992-2008

This table includes known fire crashes where fire/explosion is listed as Most Harmful Event, obtained from NHTSA's Fatal Analysis Crash System (FARS) for Calendar Years 1992-2008 and from public records for other years and for crashes not listed in FARS.

Crash Date by State	Name	City/County	Road	Deaths	Make/Model/Year	FARS #
Alabama						
04/12/06[F]	FARS	Montgomery	5466	1	2004 Grand Cherokee	10243
04/25/07[F]	FARS	Macon Co.	I-85	1	1993 Grand Cherokee	10270
Arizona						
02/01/98[F]	FARS	Gila Co.	Old Dripping Springs	1	1993 Grand Cherokee	40059
03/13/01[F]	FARS	Mohave Co.	I-40	2	1994 Grand Cherokee	40104
California						
03/16/96[F]†(5)	FARS	Carson	91	5	1996 Grand Cherokee	60718
07/07/96[F]†(1)	FARS	Poway	Espola Rd.	1	1993 Grand Cherokee	61698
10/27/99[F]	FARS	Los Angeles	SR-170	1	1998 Grand Cherokee	62795
05/07/00[F]	FARS	Orange Co.	SR-241	1	1993 Grand Cherokee	60499
07/20/01[F]	FARS	San Bernardino Co.	I-10	1	1994 Grand Cherokee	61708
08/30/02[F]	FARS	Bakersfield	SR-58	1	1993 Grand Cherokee	62653
08/18/05[F]	FARS	Oceanside	Vista Way	1	1994 Grand Cherokee	63236
05/24/06[F]†(1)	FARS	Orange Co.	SR-241	2	2001 Grand Cherokee	61349
Colorado						
01/10/05[F]	FARS	Mesa Co.	Rim Rock Dr.	1	2004 Grand Cherokee	80025
Florida						
09/05/07[F]	FARS	N/A	SR-944 32nd Ave.	2	1998 Grand Cherokee	122577
Georgia						
03/08/05[F]	FARS	Paulding Co.	N/A	1	1999 Grand Cherokee	130196
03/09/05[F]	FARS	Macon Co.	SR-49	1	1997 Grand Cherokee	130197
Illinois						
09/04/00[F]	FARS	Chicago	I-90/94	6	1993 Grand Cherokee	170827
10/16/07[F]	FARS	La Salle Co.	I-39	2	1993 Grand Cherokee	170830
Indiana						
09/16/04[F]	FARS	Warrick Co.	I-64	1	2004 Grand Cherokee	180705
11/13/04[F]	FARS	Noble Co.	US-33	4	1997 Grand Cherokee	180723
Kentucky						
02/13/00[F]	FARS	Bourbon Co.	Vemont Ln.	1	1997 Grand Cherokee	210052

Crash Date by State	Name	City/County	Road	Deaths	Make/Model/Year	FARS #
Louisiana						
07/20/03[F]†(3)	FARS	St. Martin Co.	I-10	5	2000 Grand Cherokee	220401
Michigan						
04/30/05[F]†(1)	FARS	Oakland Co.	I-75	3	2004 Grand Cherokee	260239
Nebraska						
12/19/06[F]†(1)	FARS	Pierce Co.	553 Ave. 849 Rd.	1	2000 Grand Cherokee	310215
New Jersey						
02/24/07[F]	FARS	Parsippany	I-287	1	1996 Grand Cherokee	340080
New York						
08/21/99[F]	FARS	Henrietta	I-390	1	1996 Grand Cherokee	360956
12/17/06[F]	FARS	Greenfield Center	SR-9	1	1996 Grand Cherokee	361158
08/15/07[F]	FARS	Duanesburg	I-88	1	1993 Grand Cherokee	360655
06/19/08[F]	FARS	Churubusco	River Rd.	1	2004 Grand Cherokee	360417
Ohio						
09/26/97[F]	FARS	Wood Co.	SR65	1	1993 Grand Cherokee	390948
Oklahoma						
05/26/01[F]†(1)	FARS	Oklahoma City	S. Choctaw Rd.	2	1993 Grand Cherokee	400185
Pennsylvania						
03/05/00[F]	FARS	Bucks Co.	SR-309	1	1993 Grand Cherokee	420157
South Carolina						
08/06/99[F]	FARS	Marlboro Co.	259	2	1993 Grand Cherokee	450527
05/21/00[F]	FARS	Hampton	SR-68	1	1994 Grand Cherokee	450396
07/07/08[F]	FARS	Georgetown Co.	US-17 545	1	1996 Grand Cherokee	450425
Tennessee						
08/31/01[F]	FARS	Jackson	McClellan Rd.	1	1999 Grand Cherokee	470731
08/31/02[F]	FARS	Lawrence Co.	Old Jackson Hwy.	1	1994 Grand Cherokee	470669
05/29/04[F]	FARS	Germantown	Stout Rd.	1	1996 Grand Cherokee	471036
Texas						

Crash Date by State	Name	City/County	Road	Deaths	Make/Model/Year	FARS #
01/16/98[F]	FARS	Brazoria Co.	SR-288	1	1994 Grand Cherokee	480087
06/09/04[F]	FARS	Victoria Co.	US-77	1	2002 Grand Cherokee	481205
08/06/05[F]	FARS	Bullard	FM344	1	1996 Grand Cherokee	481685
West Virginia						
09/30/06[F]	FARS	Charleston	Hickory Rd. Overbrook Rd.	1	1998 Grand Cherokee	540269
Wisconsin						
05/18/03[F]	FARS	Grant Co.	SR-133	1	1996 Grand Cherokee	550248
07/03/07[F]	FARS	Nashotah	SR-16	1	2001 Grand Cherokee	550300
				68		

[F] Indicated in FARS as most harmful: "fire/explosion."

† Fatality(s) (#) occurred in other vehicle(s).

Attachment C
Ford Pinto Investigation Report

INVESTIGATION REPORT

PHASE I

C7 - 38

ALLEGED FUEL TANK AND FILLER NECK DAMAGE IN REAR-END COLLISION OF SUBCOMPACT PASSENGER CARS

1971 - 1976 FORD PINTO

1975 - 1976 MERCURY BOBCAT

OFFICE OF DEFECTS INVESTIGATION
ENFORCEMENT
NATIONAL HIGHWAY TRAFFIC SAFETY ADMINISTRATION

MAY 1978

A PORTION OF THIS REPORT HAS BEEN WITHHELD FROM THE PUBLIC FILE PURSUANT TO 5 U.S.C. 552(b)(4).

OFFICIAL USE ONLY

C7 38-01

TABLE OF CONTENTS

		Page
I.	BACKGROUND	1
	A. BASIS FOR INVESTIGATION	1
	B. DESCRIPTION AND FUNCTION	1
	C. ANALYSIS OF THE ALLEGED PROBLEM	1
	Mode	1
	Symptoms	2
	D. INVESTIGATIVE INPUTS AND ACTIONS	2
II.	PROBLEMS ALLEGED	3
	A. REPORTS FROM CONSUMERS	3
	B. REPORTS FROM FORD MOTOR COMPANY	3
	C. REPORTS FROM CANADIAN MINISTRY OF TRANSPORT	4
	D. SUMMARY OF PROBLEM REPORTS	4
III.	TECHNICAL DATA	5
IV.	MAJOR NHTSA INVESTIGATIVE ACTIONS	9
	A. EXAMINATION OF ACCIDENT STATISTICS	9
	B. NHTSA CRASH TEST PROGRAM	11
V.	OTHER NHTSA ACTIONS	13
	A. MEDIA AND CONSUMER GROUPS	13
	B. RECORD CHECKS	13
	1. Vehicle Owner Letter File	13
	2. NHTSA Motor Vehicle Defect Recall Campaign Log	13
	3. Technical Reference Library	14
	4. Canadian Ministry of Transport	14
VI.	OBSERVATIONS	15
VII.	CONCLUSIONS	16

A. BASIS FOR INVESTIGATION:

A formal defect investigation case was initiated on September 13, 1977, based upon allegations that the design and location of the fuel tank in the Ford Pinto make it highly susceptible to damage on rear impact at low to moderate closing speeds.

On August 10, 1977, a press conference was held in Washington, D.C., to announce the release of an article entitled, "Pinto Madness", which was published in the September/October issue of Mother Jones magazine. The article made several allegations concerning the safety of the Pinto fuel tank. The most significant of these charges as related to the National Highway Traffic Safety Administration's (NHTSA) defect investigation are as follows:

1. That the Pinto fuel tank is designed and located so that in rear-impact collisions at low to moderate speeds, it is displaced forward until it impacts the differential housing on the rear axle, resulting in tank cuts and/or puncture. The leakage of gasoline thus presents a significant fire hazard.

2. That the Ford Motor Company had knowledge of this "defect" during the developmental phase of the Pinto through its own test programs, but concluded that it was more cost-effective to produce the vehicle without modifications which would have corrected the problem but added to the production cost.

Investigation was initiated to determine whether the alleged problem constitutes a safety-related defect within the meaning of the National Traffic and Motor Vehicle Safety Act of 1966.

B. DESCRIPTION AND FUNCTION:

The Pinto fuel tank is of sheet metal construction and is attached to the undercarriage of the vehicle by means of two metal straps. In addition, the fuel filler tube extends into the top left side of the tank in a sliding fit through a gasketed opening. At its other end the fuel filler tube is affixed to the inner side of the left rear quarter panel by means of a bracket which is firmly attached to the quarter panel surface.

The fuel tank is the resevoir which holds the supply of gasoline required for engine operation. In the Pinto and Bobcat of model years in question, the tank capacity is approximately 11 gallons.

C. ANALYSIS OF THE ALLEGED PROBLEM:

MODE:

Allegedly, rear impact of the Pinto by another vehicle at low to moderate closing speed displaces the fuel tank forward until it is cut or punctured

by the differential housing, or its bolts. Fuel tank filler necks pull out of the tank as well. The resulting fuel spillage may then be ignited, creating a fire hazard of obvious significance.

SYMPTOMS:

There are no symptoms to indicate the existence of the alleged safety hazard. The alleged problem addresses the rear impact crashworthiness of the Pinto and Bobcat which is exhibited only under collision conditions.

D. INVESTIGATIVE INPUTS AND ACTIONS:

Following public release of the article, "Pinto Madness", the NHTSA initiated, on August 11, 1977, a preliminary evaluation of the alleged safety defect, and on September 13, a formal defect investigation case. The following activities were undertaken in these efforts.

A. The author of the magazine article, Mark Dowie, was asked to make available to the NHTSA, documentation and evidence upon which his article was based.

B. Consumer letters, including Congressional inquiries on behalf of constituents, were received and appropriately processed.

C. The National Center for Statistics and Analysis conducted a search of the Fatal Accident Reporting System (FARS) files, to compile relevant fatal accident statistics and data.

D. The Ford Motor Company was requested to provide various technical and legal data concerning the matter.

E. Contact was established and maintained with the Canadian Ministry of Transport (CMOT), which also initiated an investigation of the "Pinto Madness" charges.

F. A test program of staged vehicle-to-vehicle rear-end collisions was developed and a contract awarded for the performance of these tests.

The details of the aforementioned sources of information, as well as NHTSA actions taken and the findings which resulted, are detailed in subsequent sections of this report.

II. PROBLEMS ALLEGED

A. REPORTS FROM CONSUMERS:

Since public release of the Mother Jones article, the NHTSA has received over 900 inquires from the public concerning this matter. The defect investigation case file contains 54 letters and telephone contacts, including 18 Congressional inquiries on behalf of constituents. The Office of Public Affairs and Consumer Participation has received approximately 540 inquiries from Pinto and other vehicle owners concerning this matter, in addition to an estimated 30 inquiries from the media, and several inquiries from various consumer groups. The Auto Safety Hotline reported that an estimated 250 telephone inquiries have been received with no further contacts made with these consumers. In addition, over 40 telephone contacts have been made by ODI Staff personnel with various consumers, media representatives and with NHTSA representatives in Regional Offices. These contacts were generally non-contributory to the investigation in terms of furnishing factual data, and are not documented in the record.

Of the consumer letters and other inquires, only one involved an actual report of a fire occurrence in a Pinto vehicle upon rear-end impact, not previously reported to the NHTSA through other sources. This particular instance involved a parked Pinto sedan of unknown model year which was rear-ended by a 1969 Pontiac Firebird in a residential area. The incident resulted in fire damage to both the Pinto and other real property, but no bodily injuries and/or fatalities were sustained.

B. REPORTS FROM FORD MOTOR COMPANY (FORD):

In response to the NHTSA's requests, Ford provided information concerning the number and nature of known incidents in which rear impact of a Pinto vehicle reportedly caused fuel tank damage, fuel system leakage or fire occurrence. This information disclosed the following:

Total Number Rear Impact/Fuel Leakage/Fire cases reported: 35
Lawsuits/Liability Claims: 29

Total Number injuries, including fatalities, reported in all vehicles: 107

Total Number injuries, including fatalities, sustained by Pinto occupants: 57

Total Number fatalities reported: 26

Number fatalities sustained by Pinto occupants: 25

Lawsuits/Liability Claims: 29
(Cases involving fires/burn injuries or claims of defective/dangerous fuel tank/negligence in fuel system design)

Number burn injuries: 23

Number fatalities reported (non-impact): 21

Number cases settled out of court or by judgement against Ford/defendants: 8

Number cases pending trial: 19

Cases settled in favor of Ford/under investigation: 2

C. REPORTS FROM CANADIAN MINISTRY OF TRANSPORT (CMOT):

Since the initiation of this defect investigation case, two incidents have been reported to the NHTSA by the CMOT, involving rear-impact collisions of Ford Pintos which resulted in fires. These incidents resulted in one fatality, and two impact/burn injury cases.

D. SUMMARY OF PROBLEM REPORTS:

In total, the NHTSA is aware of 38 cases in which rear-end collisions of Pinto vehicles have resulted in fuel tank damage, fuel system leakage and/or ensuing fire. These cases have resulted in a total of 27 fatalities sustained by Pinto occupants, of which one is reported to have resulted from impact injuries. In addition, 24 occupants of these Pinto vehicles have sustained non-fatal burn injuries.

III. TECHNICAL DATA

The following technical data acquired from Ford and other sources has relevance to the design, materials, construction or performance aspect of the fuel tank installed in the 1971-1976 Pinto and 1975-1976 Bobcat.

1. The Pinto two-door sedan was introduced for sale in the United States on September 11, 1970, as a 1971 model year vehicle. A 1971 model year Pinto three-door version was introduced in February 1971. The station wagon model was introduced as a 1972 model year vehicle on March 17, 1972.

2. Production statistics for the pre-1977 Pinto are as follows:

Model Year	2-Door Sedan	3-Door Sedan	Station Wagon	Totals
1971	267,694	59,173	0	326,867
1972	171,616	187,657	96,221	455,494
1973	109,080	141,440	204,514	455,034
1974	120,911	159,999	217,351	498,261
1975	58,697	63,129	83,137	204,963
1976	86,842	87,101	99,138	273,081
Totals	814,840	698,499	700,361	2,213,700

3. Based upon R.L. Polk and Company statistics of vehicle registration as of July 1, 1976, it is estimated that 1.9 million Pintos of 1971-1976 model years are currently in use. These Pinto vehicles accounted for 2.0% of all registered cars as of July 1, 1976.

4. The 1971-1976 Pinto fuel tank is of sheet steel construction and is attached to the vehicle's rear undercarriage by two metal straps, with mounting brackets. The tank is located aft of the rear axle which, in the Pinto, may be one of two types; 6 3/4 - inch ring gear with integral carrier, or 8 - inch ring gear with removeable carrier. The rear differential cover on the 8 - inch axle is welded on, and employs no mechanical fasteners. The 6 3/4 - inch axle differential cover is attached by eight 5/16 - 18x0.62 hex head locking screws. The differential cover dome protrudes further aft than do the the screw heads, as follows:

	Height of Fastener Head Relative to Adjacent Cover	Distance of Fastener Head Forward of Cover Dome Surface
S.O.P. 1971 -	.314/.246	1.954/1.827
Approx. 3/71 - Model Year 1977	.313/.293	1.907/1.827

The outer edge of the differential cover dome also protrudes aft approximately 1/8 - inch, the apparent result of the dome forming process.

In answering NHTSA questions, Ford provided information concerning nominal distances from the forward surface of the fuel tank to the aft surface of the differential cover. While the true distance from the fuel tank body to the nearest point on the rear axle varies from one model year to another and from sedan to station wagon models, the 1971-1976 Pinto with the 6 3/4 - inch axle maintained this distance at approximately 3 inches. In the 1977 model year, this distance was increased by a minimum of 1 inch. It was also disclosed that the left shock absorber is located approximately equidistant from the fuel tank as the rear axle.

In this investigation, the fuel filler neck is considered to be an integral part of the tank. The filler neck is firmly attached by a flange with mounting screws, to the inner side of the left rear quarter panel. At its other end, the filler neck extends into the fuel tank through a gasketed opening in the left side of the tank.

Ford initiated 82 post-introduction engineering changes in the Pinto fuel tank, fuel filler neck, and associated hardware utilized for attaching the fuel tank to the vehicle underbody. Review of these data disclosed the following changes with potential relevance to the rear-impact crash performance of the fuel tank.

. 1973 Station Wagon filler pipe - length of fuel filler pipe reduced by 0.50 inches at tank attachment end. Initiated at Job #1.

. 1977 Sedan and Station Wagon fuel tank shield - plastic shield added between fuel tank and straps. Initiated at Job #1.

. 1977 Sedan filler pipe assembly - filler pipe assembly lengthened to reduce fuel capacity by 1.3 gallons and vehicle weight by 8 pounds.

. Other engineering changes involved various items including tank capacity, filler pipe flange and seals, and tank straps and brackets.

5. According to Ford, Mercury Bobcat vehicles "... utilize essentially the same structures as Pintos of contemporary manufacture and their fuel systems and related components are identical to those employed in such Pintos."

Production statistics for the pre-1977 Mercury Bobcat are as follows:

Model Year	3-Door Runabout	Station Wagon	Totals
1975	14,605	17,851	32,456
1976	20,212	21,207	41,419
Totals	34,817	39,058	73,875

6. Prior to initial introduction of the Pinto for sale, Ford performed four rear impact barrier crash tests which included "...assessment of the post-impact condition of the fuel tank and/or filler pipe." These tests were reportedly conducted on "...experimental vehicles equipped with differing rear structure and fuel system designs proposed from time to time for incorporation in the Pinto..." Ford further reported that "...none of the tested vehicles employed structure or fuel system designs representative of structures and fuel systems incorporated in the Pinto as introduced in September 1970." These tests were conducted May 1969 through November 1969, utilizing a vehicle identified as a "Special Maverick."

   Following initial introduction of the Pinto for sale, Ford continued a program of rear barrier impact tests on Pintos which included assessment of the post impact condition of the fuel tank and/or filler pipe. Reports of 55 rear barrier crash tests conducted "... on both production vehicles and vehicles with experimental components and/or modified structures..." were provided, including tests of Mercury Bobcats. While these tests were reportedly performed, in part, in connection with proposed NHTSA rulemaking activities, three items developed a history of consistent results:

   a. At impact speeds as low as 21.5 miles per hour with a fixed barrier (Crash Test No. 1616), the fuel tank was punctured by contact with the differential housing and/or its bolts, or with some other underbody structure.

   b. Under similar test conditions as (a), above, the fuel filler neck was pulled out of the tank completely.

   c. Again, under similar test conditions as (a), above, structural and/or sheet metal damage to the vehicle was sufficient to jam one, or both of the passenger doors closed.

   Among the experimental and other modifications studied in these tests were:

   . Use of rubber bladder with locally reinforced textured nylon patches in "puncture prone areas", installed inside steel tank

- Modification of filler pipe attachment to the left rear quarter panel and fuel tank to prevent pull-out during impact.
- Installation of plastic shields on the fuel tank immediately aft of the differential housing.
- Modified exhaust system with muffler located behind the rear axle.
- Fuel tank made of molded polyethylene.
- Increased length of fuel filler neck extending inside the tank.
- Modified rear underbody structure and reinforced rear quarter panels.

Review of the test reports in question suggested that Ford had studied several alternative solutions to the numerous instances in which fuel tank deformation, damage or leakage occurred during or after impact.

IV. MAJOR NHTSA INVESTIGATIVE ACTIONS

A. EXAMINATION OF ACCIDENT STATISTICS:

A search of the NHTSA's Fatal Accident Reporting System (FARS) file was conducted by the National Center for Statistics and Analysis, Research and Development. Search of the automated FARS file provided information on fatal accidents for approximately 2 1/2 years of data collection. A purpose of the search was to determine whether Pintos had been involved in rear-end fatal crashes with fires.

In terms of the purely quantitative data, the following tabulations specifically applicable to the Pinto were disclosed by the FARS examination (covering 1975, 1976 and approximately half of 1977):

. Total Number Fatal Pinto Accidents Due to All Causes, 1975-1977	1,626
. Total Number Pinto Occupant Fatalities in Accidents Due to All Causes, 1975-1977	1,417
. Total Number Fatal Pinto Accidents with Fire, 1975-1977	33
. Total Number Pinto Occupant Fatalities in Accidents with Fire, 1975-1977	41
. Total Number Fatal Pinto Accidents with Rear End Collision, 1975-1977	95
. Total Number Pinto Occupant Fatalities in Accidents with Rear End Collision, 1975-1977	72
. Total Number Fatal Pinto Accidents with Rear End Collision and Fire, 1975-1977	11
. Total Number Pinto Occupant Fatalities in Accidents Rear End Collision and Fire, 1975-1977	17

The data show that rear-end collisions of Pinto vehicles have resulted in fires and fatalities. This fact is substantiated by the historical details of various litigation cases.

VII. CONCLUSIONS

Based upon the information either developed or acquired during this investigation, the following conclusions have been reached:

1. 1971-1976 Ford Pintos have experienced moderate speed, rear-end collisions that have resulted in fuel tank damage, fuel leakage, and fire occurrences that have resulted in fatalities and non-fatal burn injuries.

2. Rear-end collision of Pinto vehicles can result in puncture and other damage of the fuel tank and filler neck, creating substantial fuel leakage, and in the presence of external ignition sources fires can result.

3. The dynamics of fuel spillage are such that when impacted by a full size vehicle, the 1971-1976 Pinto exhibits a "fire threshold" at closing speeds between 30 and 35 miles per hour.

4. Relevant product liability litigation and previous recall campaigns further establish that fuel leakage is a significant hazard to motor vehicle safety, including such leakage which results from the crashworthiness characteristics of the vehicle.

5. The fuel tank design and structural characteristics of the 1975-1976 Mercury Bobcat which render it identical to contemporary Pinto vehicles, also render it subject to like consequences in rear impact collisions.

B. NHTSA CRASH TEST PROGRAM

On September 30, 1977, a Request for Proposals was issued in order to select a contractor to perform a series of staged vehicle-to-vehicle crash tests at moderate speeds. The program was designed to generate data and to document the results of specified rear impact collisions under actual driving conditions. The stationary vehicles were specified as Pintos, Chevrolet Vegas, and full size sedans, with the moving vehicles to be identical full size sedans. The program required that the fuel tanks of the stationary vehicles be filled to at least 95% of rated capacity, and that the engines of both stationary and moving vehicles be running and at normal operating temperature at the time of impact. In addition, the brake lights were illuminated on the stationary vehicle at impact. Other test variables included:

- Speed and attitude of the moving vehicle
- Illumination of headlights on the moving vehicle
- Angle and parallelism of vehicles at impact

The contract was awarded to Dynamic Science, Incorporated, in Phoenix, Arizona, and testing commenced on February 1, 1978. As orginally designed, the test program involved 6 Pintos, 6 Vegas, and 3 full size vehicles for use as stationary cars. The program was subsequently amended to include 4 Pintos of 1974-1976 model years and 2 Pinto Station Wagons. Other changes in test requirements were made as the program progressed; these are identified in the matrix of test results attached as Figure 2, to this report. In its final form, the program entailed:

11 Full size vehicles/Pinto tests

1 Pinto/fixed barrier test (tank fulled with Stoddard solvent)

5 Full size vehicle/Vega tests

1 Vega/fixed barrier test (tank filled with Stoddard solvent)

1 Full size vehicle/Full size vehicle test

19 Total tests

The results of the tests are summarized in Figure 1 .Therein, it is noted that in two Pinto tests with the full size vehicle travelling at 35 miles per hour, fires resulted. In similar tests at 30 miles per hour, significant leakage of the Pinto fuel tanks resulted without fire. A significant finding in the test program was the fact that the design of the Pinto fuel filler pipe resulted in its being completely dislodged from the tank in some cases. Impacts sufficient to result in puncture/tearing of the

fuel tank generally resulted in leakage of fuel in a pouring fashion. Separation of the filler neck from the tank provided a fuel spillage mechanism in a wide dispersion fashion.

No fires were produced by the tests involving Vegas and full size vehicles as stationary cars.

All of the tests were documented by high-speed and normal speed color motion pictures, as well as by still photography following impacts.

V. OTHER NHTSA ACTIONS

The following are other actions taken by the NHTSA.

A. MEDIA AND CONSUMER GROUPS:

On August 11, 1977, the first of several letters was sent to Mr. Mark Dowie, author of the Mother Jones article, requesting that he make available to the NHTSA, documentation and evidence upon which his article was based.

Because of the sensitivity and widespread media attention given to the Mother Jones article, as well as to the settlements of two related lawsuits during the course of this investigation, specific requests to various media and consumer organizations for information were generally not made. Efforts were expended, however, in cooperating with the media and consumer groups to advise them of the nature, scope and status of the NHTSA's investigation. Included among the organizations contacted were the Center for Auto Safety, ABC-TV Evening News, and various television stations and newspapers.

B. RECORDS CHECKS:

1. Vehicle Owner Letter File

The NHTSA's motor vehicle owner letter file, initiated in September 1966, contains all letters and telephone contacts received from all sources reporting defects and other problems with motor vehicles. At present, approximately 2,500 documents enter this file each month.

All letters received by the NHTSA in specific reference to this investigation were noted in Section II.A., of this report.

2. NHTSA Motor Vehicle Defect Recall Campaign Log

The log contains the make, model, year and a brief description of the defect for all safety defect recall campaigns reported to the NHTSA by manufacturers in accordance with the Act of 1966.

A check of the Campaign Log disclosed that at least 17 previous recalls have been conducted for correction of various specific problems that could allow fuel leakage from the fuel tank/filler neck/cap. Of note is Campaign No. 77V048, in which General Motors recalled 128,700 1968-1970 Opel Kadetts for correction of an uncovered tail-light mounting bolt which could puncture the fuel tank in low speed right rear impacts.

In Campaign No. 77V114, the Ford Motor Company recalled 642 1977 Pintos for replacement of an erroneously installed U-nut on the inboard rear attachment of the rear bumper isolator. The edge of the U-bolt could possibly contact and puncture the fuel tank.

3. Technical Reference Library

A search of the Technical Reference Library filed was conducted for information and publications relevant to this investigation. This search disclosed that previously cited Pinto recall campaign (77V114), as well as three others which could involve possible fuel leakage and fire potential.

A review of all Pinto Standards Enforcement Tests disclosed that a 1976 Pinto Pony MPG failed to meet the requirements of FMVSS 301, Fuel Systems Integrity.

4. Canadian Ministry of Transport (CMOT)

On September 30, 1977, a 1974 Pinto was involved in a rear-impact, fatal fire accident in Windsor, Ontario, Canada. The Pinto was impacted by a 1976 Chevrolet Impala in a braking attitude and forced into the rear of a 1976 Mercury Monarch. The fuel tank of the Pinto was punctured or torn in several locations, the filler neck pulled out completely, and the vehicle was completely engulfed by fire. One of the two Pinto occupants sustained fatal injuries.

The CMOT acquired possession of the Pinto and performed a thorough inspection of the vehicle on November 29 and 30. This inspection was attended by NHTSA and Ford representatives.

On Febraury 24, 1978, the CMOT reported the occurrence of a rear impact with fire incident involving a 1973 Pinto. The single Pinto occupant was attempting engine repairs when the vehicle was struck by a 1976 Plymouth Volare reportedly travelling at 35 miles per hour. A report of the incident, with photographs taken within seconds after the collision by a nearby pedestrian, was furnished to the NHTSA on March 30, 1978.

VI. OBSERVATIONS

The fuel tank and filler pipe assembly installed in the 1971-1976 Ford Pinto is subject to damage which results in fuel spillage and fire potential in rear impact collisions by other vehicles at moderate closing speeds.

When impacted from the rear by other vehicles at moderate closing speeds, the Pinto fuel tank may be punctured, cut or torn, by contact with the rear axle differential housing assembly, the left shock absorber and/or its lower bracket, or by other vehicle rear underbody components.

In nine staged collision tests of 1971-1976 Pinto 2-door sedans and 3-door runabouts impacted by 1971 Chevrolet Impalas at closing speeds of 30 and 35 miles per hour, two tests resulted in fires. In all of the remaining seven tests, fuel tank damage occurred with fuel leakage rates ranging from 6 to 700 ounces per minute, with an average rate in excess of 240 ounces per minute.

In one test of a 1972 Pinto towed rearward into a fixed barrier at 21.5 miles per hour, the fuel tank sustained damage and the filler pipe pulled out of the tank. Fuel leakage was measured to exceed 12 ounces per minute.

In tests of 1 ea., 1972 and 1976 Pinto station wagons, no significant fuel leakage rates were measured. Similarly, no punctures or tears of the fuel tanks were caused, and the fuel filler pipes did not completely pull out of the tanks.

Data from the Ford Motor Company indicates that at least 35 rear-end collisions of 1971-1976 Pintos have occurred in the United States, in which fuel tank damage and/or fuel leakage and/or fires have resulted. These incidents have resulted in at least 25 fatalities and 23 cases of non-fatal burn injuries.

Data from the Fatal Accident Reporting System disclosed that from January 1975 through approximately June 1977, 33 fatal Pinto accidents occurred that involved fire, and resulted in 41 Pinto occupant fatalities. During this same period of time, 11 fatal accidents occurred in which Pintos were impacted from the rear and fires resulted; 17 Pinto occupants sustained fatal injuries in these cases.

Since initiation of this investigation, two cases have occurred in Canada involving rear impact of Pintos which resulted in fuel tank fires. These occurrences resulted in 1 fatality and 1 burn injury case.

In the history of product liability actions filed against Ford and other co-defendants involving rear impact of Pintos with fuel tank damage/fuel leakage/fire occurrences, nine cases have been settled. Of these, the plaintiffs have been compensated in 8 cases, either by jury awards or out of court settlements.

These data were recognized to be subject to qualifications and amplifications. Basically pertinent among these are the following:

- Make/model information in FARS comes from two sources: vehicle registration data and automated decoding of the Vehicle Identification Number. Therefore, a particular car was identified where either one of these two sources indicated it to be the make/model in question.

- Fire/explosion is not a standard data element on most police reporting forms, unless a non-collision fire caused an accident. Thus, FARS coding of fire is due primarily to its specific mention, if any, in the officer's accident description. In addition, FARS data do not indicate the origin of the fire.

- If a death due to burns occurred sometime after the crash, it is less likely that it would be reported on the officer's accident report.

- FARS does not record the cause of death, only its fact; it does not distinguish between deaths due to impact and those caused by the fire.

- The FARS cases examined disclosed limited availability of data necessary to establish accurate pre-impact closing speeds.

Attachment D
Fire Safety Performance of Motor Vehicles in Crashes

FIRE SAFETY PERFORMANCE OF MOTOR VEHICLES IN CRASHES

Kennerly H. Digges[1]
R. Rhoads Stephenson[1]
Paul G. Bedewi[2]
[1]Motor Vehicle Fire Research Institute (MVFRI)
[2]FHWA/NHTSA National Crash Analysis Center – The George Washington University
USA
Paper Number 422

ABSTRACT

The research reported in this paper is a follow-on to a five year research program conducted by General Motors in accordance with an administrative Settlement Agreement reached with the US Department of Transportation. In lieu of a vehicle recall to reduce vehicle vulnerability to post-crash fires, a research program was undertaken to provide knowledge to assist reducing the fire vulnerability for all future vehicles.

In this follow-on research project, GM agreed fund more than $4.1 million in fire related research over the period 2001-2004. This paper summarizes the projects undertaken and the preliminary results.

Research projects that have been initiated include the following: (1) statistical analysis of field data; (2) assessment of state-of-the-art in fuel safety technology; (3) test and evaluation of fuel tanks exposed to fire and impact; (4) development of recommended practices for the fire safety of 42-volt electrical systems.

For the year 2001, there were a total of 1,657 fatal crashes in which there was a fire. This is about 2.9% of all fatal crashes. Analysis of FARS data indicates that the fire rates in cars has dropped by 43.7% and LTVs (pick-ups, vans and SUVs) by 59.7% since the 1979. In 2000, the fire rate for passenger cars was 5.14 fires/million vehicle years, compared to 6.39 for light trucks.

For the years 1997-2000 the NASS/CDS contains 228 cases with fires. In these cases, frontal crashes accounted for 51.3% followed by rollover (24.1%) and side (18.4). Rear impacts accounted for the smallest fraction – 6.1%. The most frequent origin for the fire was the engine compartment, accounting for 64.5%. The fuel tank accounted for 11.4%. There were a relatively large number of unknown sources – 17.1%. The most frequent object impacted before the fire occurred was another vehicle (41.2%). However, a variety of roadside objects made up 48.7%. Narrow objects such as poles and trees contributed more than 25%.

Plastic tanks of three different shapes were evaluated to fire and impact testing as required by ECE R34, Annex 5 and US CFR 393.67 (e)(1). The ECE R34 fire test appeared to produce repeatable results and all tanks demonstrated the capability to withstand the test. All tanks passed the ECE R34 impact test. The US CFR 393.67 (e)(1) requires the tank containing water equal to its rated weight of fuel to be dropped on its corner from a height of 30 ft. All new tanks passed the test. However, two of three tanks that had been in service for three years failed the test.

Research is now underway to identify state-of-the-art technologies in present day motor vehicles. Other research is oriented to developing test methods to assure the fire safety of materials used in vehicles with 42-volt electrical systems. The results of this research will be made public as it progresses.

INTRODUCTION

On March 7, 1995, the U.S. Department of Transportation (DOT) and General Motors Corporation (GM) entered into an administrative agreement, which settled an investigation that was being conducted by the National Highway Traffic Safety Administration (NHTSA) regarding an alleged defect related to fires in GM C/K pickup trucks [NHTSA 1994 and 2001].

Under the GM/DOT Settlement Agreement, GM agreed to provide support to NHTSA's effort to enhance the current Federal Motor Vehicle Safety Standard (FMVSS) No. 301, regarding fuel system integrity, through a public rulemaking process. GM also agreed to expend $51.355 million over a five-year period to support projects and activities that would further vehicle and highway safety. Ten million dollars of the funding was devoted to fire safety research [NHTSA 2001].

Subsequent to the GM/DOT Settlement, GM agreed to fund an additional $4.1 million in research related to impact induced fires. This latter research project was included under the terms of a judicial settlement. The fuel safety project objectives are defined by the White, Monson and Cashiola vs. General Motors Agreement dated June 27, 1996 [Judicial District Court 1996]. All research under the project will be made public for use by the safety community. The purpose of this paper is to provide an initial public

report on the projects that have been funded under this research program, along with results to date.

Research projects that have been initiated include the following:

1. A statistical analysis of field data to determine the frequency of fuel leaks and fires by model year and by other crash attributes.
2. A case by case study of fuel leaks and fires in NASS/CDS and an assessment of opportunities for reduction of vulnerability.
3. The assessment of the state-of-the-art technology to reduce the frequency of fires in motor vehicles and/or to delay the time for fires to propagate to the fuel or the interior of the occupant compartment.
4. The evaluation of fuel tanks of various shapes when subjected to fire and impact testing required by ECE or other government standards.
5. The development of recommended practices for the prevention of fires in vehicles equipped with 42-volt electrical systems.

The status and results of each of the above projects is summarized in the sections to follow.

STATISTICAL ANALYSIS OF VEHICLE FIRES

The occurrence of serious injuries and fatalities from fires has remained virtually unchanged over the past ten years. Based on data published by the NHTSA for the year 2000, there were a total of 1,657 (2.9%) fatal and approximately 5,000 (0.1%) injury crashes in which there was a fire [NHTSA 2002]. Of these, 328 crashes, totaling 552 fatalities, coded fire/explosion as the most harmful event. Between 1991 and 2000, the percentage of fire related fatal crashes has continued to range between 2.6 - 2.9% of all fatal crashes, and 0.1 – 0.2% of all injury crashes. Although driving exposure has increased over this time period, the occurrence of these fatalities and serious injuries warrants a more detailed investigation into the nature of these crashes.

Previous work has focused on the seriousness or severity of fire related casualties, including injury and fatality frequencies during impact induced car fires. Additionally, impact induced fuel leakage has also been studied, which may be another indicator of the performance and crashworthiness of fuel systems. Due to the continued occurrence of these events, there appears to be a necessity to reevaluate this topic as it applies to the current U.S. vehicle fleet. This includes looking at the effects of model year, crash severity, fuel leak hazard, impact modes, and vehicle types. Previous studies have not focused on the vehicle mix, which has changed dramatically over the past decade. Of particular interest is the increasing population of light trucks (pick-ups, vans, and SUVs).

Several resources were used to determine the factors related to the actual occurrence and impact of fires in light passenger vehicles. These factors included (1) an investigation into the availability of fire related data from state, federal, private, and international sources, (2) a statistical analysis of national data from 1975-present, (3) a statistical analysis of selected state accident records from 1978-present. Results from item (2) will be presented here. Work under item (1) and (3) is still underway and results will be published at a later date, along with updates in the other areas.

Analysis of State and National Data from 1975-Present

Previously, Malliaris examined FARS 1975-1987 to understand certain trends in accidents associated with fire events [Malliaris, 1991]. The analysis reported in this paper further extends the Malliaris work to include the present vehicle fleet and provide a differentiation by vehicle type.

Malliaris also examined Michigan state data for the years 1978-1984 to assess fire rates and fuel leakage rates in police reported crashes [Malliaris 1991]. At present the state data study is being updated and applied to states other than Michigan. In 1990, Michigan discontinued reporting fuel leakage. Consequently, this condition could not be updated. Initial studies have confirmed a number of findings initially reported by Malliaris. The extension of the analysis to later years in now underway and will be reported when completed.

Fire Rates in Vehicles 0-4 Years Old Involved in Fatal Accidents

Figure 1 shows the fire occurrence for vehicles 0 to 4 years old at the time they were involved in fatal accidents. To be counted, a fire had to occur in the vehicle after the crash and a fatality had to occur in the crash. The fatality may or may not have been in that particular vehicle or caused by the fire. Figure 2 displays the same data adjusted for vehicle exposure. The exposure metric used in the figure is the number of registered vehicle years by vehicle class, given as million vehicle years or MVY.

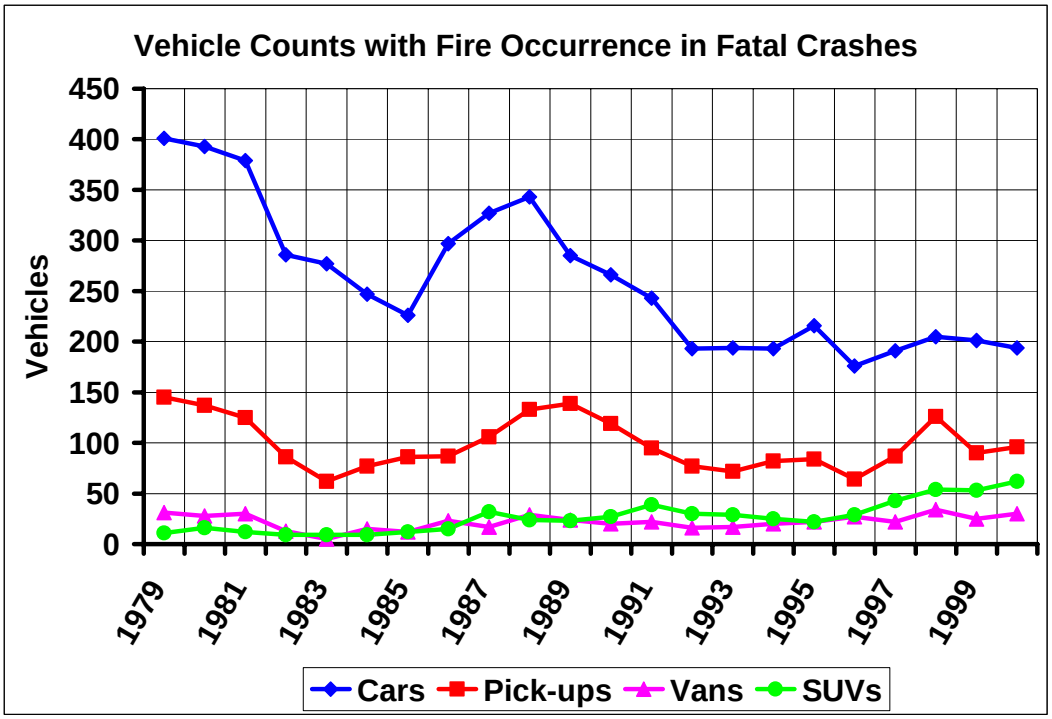

Figure 1. Frequency counts of vehicles involved in fatal crashes where a fire occurred in that particular vehicle (fatality did not necessarily occur in the vehicle with the fire). Data is from FARS 1979-2000, vehicle age is 0-4 years, and distributions are by vehicle type.

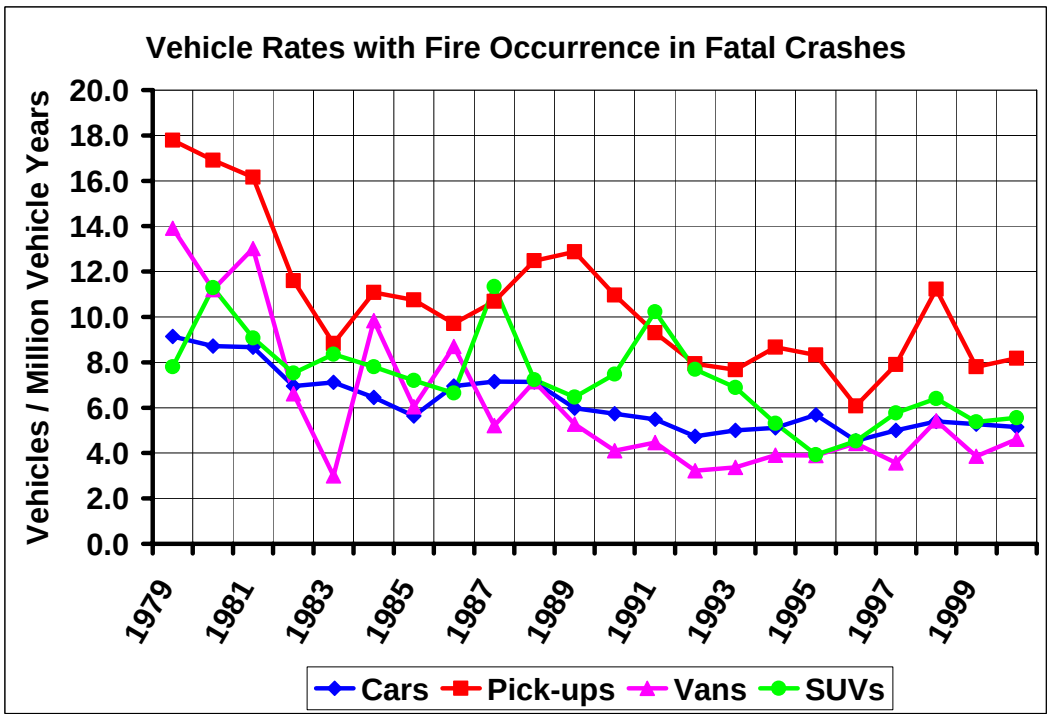

Figure 2. Rates per million vehicle registered years of vehicles involved in fatal crashes where a fire occurred in that particular vehicle (fatality did not necessarily occur in the vehicle with the fire). Data is from FARS 1979-2000, vehicle age is 0-4 years, and distributions are by vehicle type.

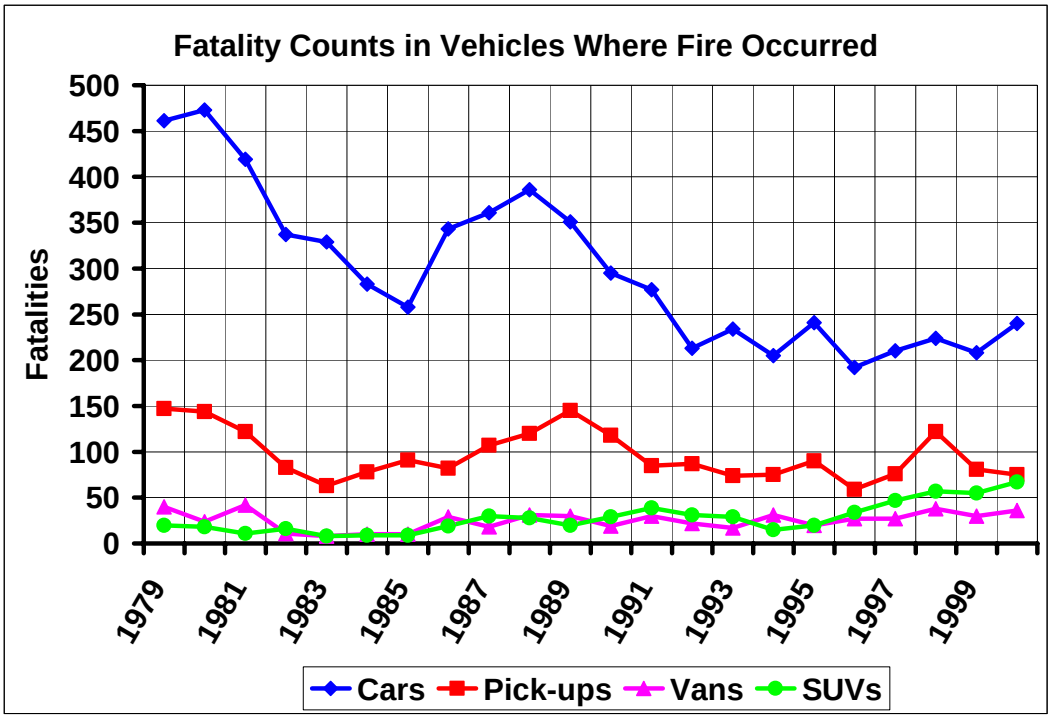

Figure 3. Fatality counts in vehicles where there was the occcurence of a fire/explosion (fatalty is not necessarily attributed to the fire event). Data is from FARS 1979-2000, vehicle age is 0-4 years, and distributions are by vehicle type.

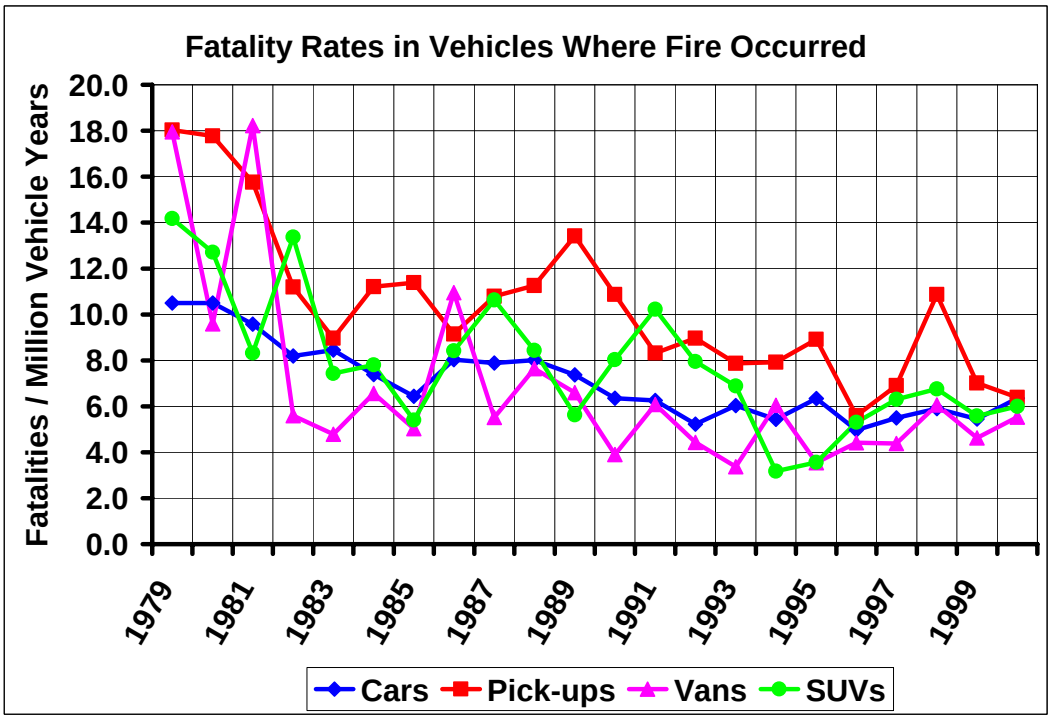

Figure 4. Fatality rates per million vehicle registered years in vehicles where there was the occcurence of a fire/explosion (fatalty is not necessarily attributed to the fire event). Data is from FARS 1979-2000, vehicle age is 0-4 years, and distributions are by vehicle type.

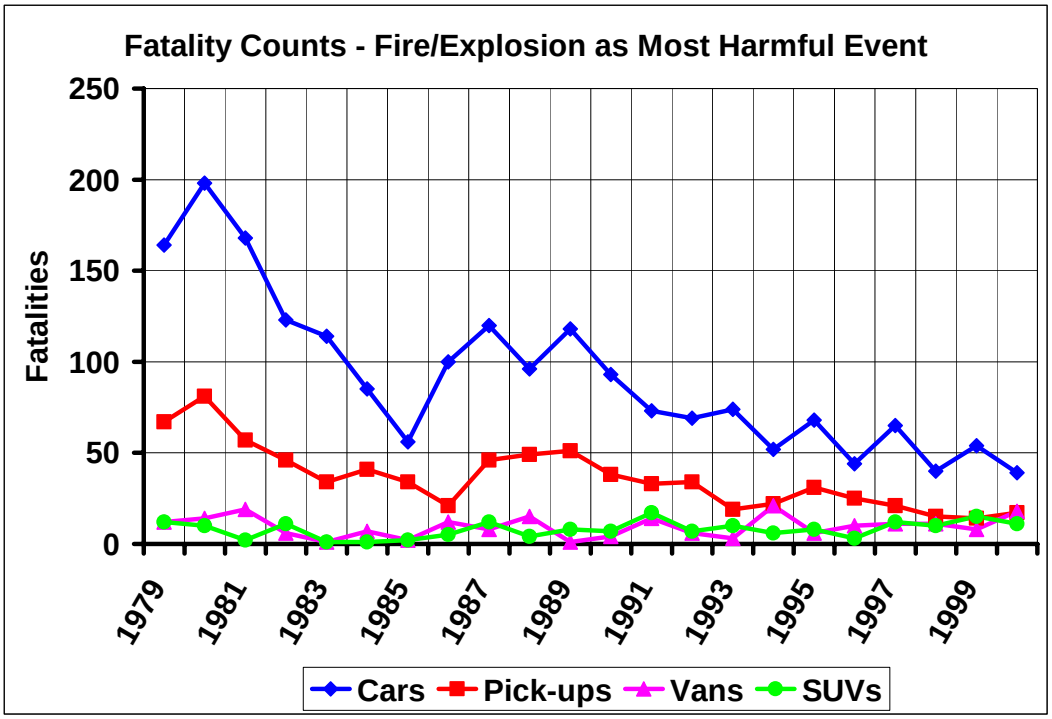

Figure 5. Fatality counts in vehicles where there was the occcurence of a fire/explosion and the fire event has been coded as the most harful event (i.e. cause of death). Data is from FARS 1979-2000, vehicle age is 0-4 years, and distributions are by vehicle type.

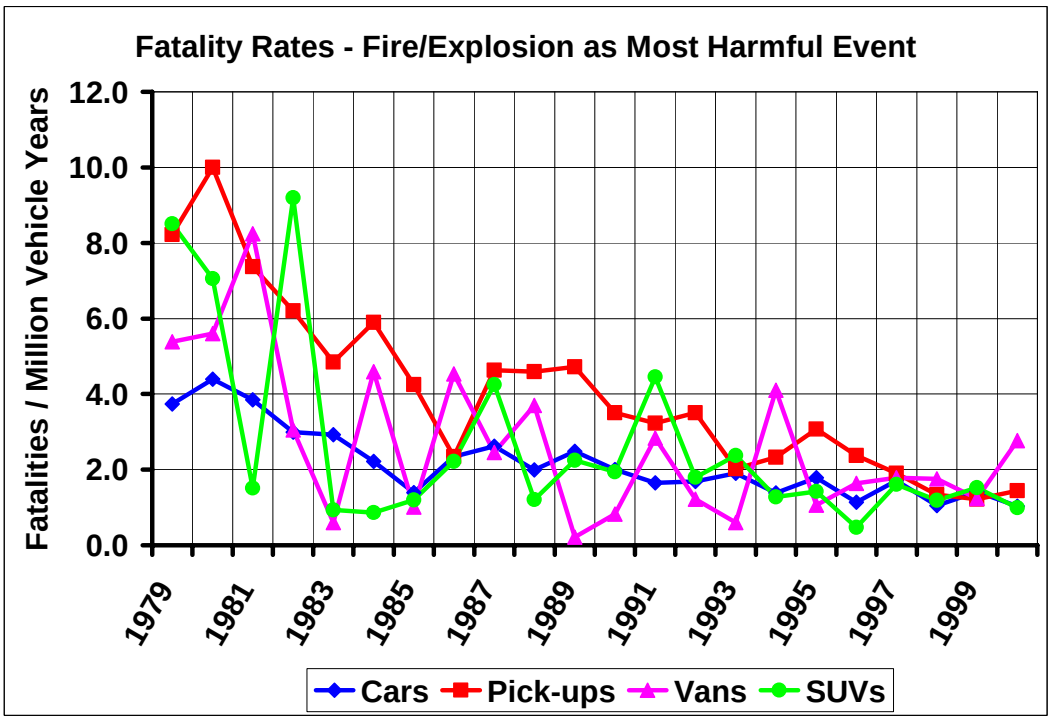

Figure 6. Fatality rates per million vehicle registered years in vehicles where there was the occcurence of a fire/explosion and the fire event has been coded as the most harful event (i.e. cause of death). Data is from FARS 1979-2000, vehicle age is 0-4 years, and distributions are by vehicle type.

This study looks at vehicles of age 0-4 years; therefore, FARS year 2000 includes models years 1996-2000. A significant occurrence took place during model year 1976 with the introduction of the FMVSS 301 standard for fuel system integrity. Based on data in these figures, FARS year 1981 would be the first year with all vehicles FMVSS 301 compliant.

Figures 3 and 4 provide the fatality counts and rates for fatal crashes in which the fatality occurred in the vehicle where there was a fire. In these figures the fatality was not necessarily attributed to the fire event. Figures 5 and 6 relate the number and rate of fatalities to the fire event. In these figures, the fire event has been coded as the most harmful event, indicating it was the cause of the fatality. Often times it may be difficult to discern the cause of the fatality in these crashes (biomechanical trauma vs. fire trauma). This distinction was not investigated and the coding was taken directly from FARS. Previous studies have attempted to investigate the uncertainty and difficulty in coding fire as the most harmful event [Davies 2002].

It is positive to note that fire occurrence rates and fatality rates, including most harmful event rates, have declined since 1979 for all vehicle classes. With regard to fire occurrence counts and fatality counts, passenger cars and pick-up trucks have shown significant declines since 1979. Vans have remained relatively constant, while SUVs have shown a slight increase in recent years. The rise in SUVs is offset by the increased number of vehicle registrations over the same time period. SUV registrations have increased by 790% since 1979, and by over 300% since the early 1990's. Even with the increased exposure, rates have declined.

Passenger cars have shown the greatest decline in fire occurrence counts (207 fires - 51.6%), while pick-up trucks have the largest rate decline (9.62 fires/MVY). Pick-ups still maintain the highest rate for vehicle fires at 8.17 fires/MVY. In 2000, the fire rate for passenger cars was 5.14 fires/MVY, compared to 6.39 fires/MVY for light trucks. When looking at the overall decline in fire rates, cars have dropped by 43.7% and LTVs (pick-ups, vans, SUVs) by 59.7%. More importantly fatality rates by most harmful event have declined by 72.3% for cars and 79.7% for LTVs. Tables 1 and 2 display data from 1979 and 2000 for fire occurrence rates and fatality (most harmful event) rates respectively.

Table 1. Fire occurrence rates, vehicles age 0-4 in FARS

	Cars	Pick-ups	Vans	SUVs	All LTVs	All Vehicles
1979	9.13	17.79	13.91	7.79	15.86	10.56
2000	5.14	8.17	4.61	5.56	6.39	5.69
Change	4.00	9.62	9.30	2.23	9.47	4.87
Percent	43.7%	54.1%	66.9%	28.7%	59.7%	46.1%

Table 2. Fatality rates by most harmful event, vehicles age 0-4

	Cars	Pick-ups	Vans	SUVs	All LTVs	All Vehicles
1979	3.74	8.22	5.39	8.50	7.72	4.58
2000	1.03	1.45	2.77	0.99	1.56	1.27
Change	2.70	6.77	2.62	7.52	6.15	3.31
Percent	72.3%	82.4%	48.6%	88.4%	79.7%	72.4%

This FARS data is also being reviewed for such variables as crash mode (frontal, rear, rollover, etc.), impacting object, and more. Certain vehicle characteristics may reveal trends; however the relatively low number of fire events may prevent significant findings as the data is further categorized.

CASE REVIEWS OF VEHICLE FIRES

For the first phase of this study, the National Automotive Sampling System – Crashworthiness Data System (NASS/CDS) was used as the source of data in the analysis of detailed case studies. There have been two primary tasks completed to this stage. These include 1) the development of a NASS analysis tool for fire and fuel leakage cases, and 2) the application of this tool toward the study of NASS/CDS cases.

A crash query and case summary reporting tool is currently under development to help researchers review historical crash cases collected through NASS/CDS. The web based query page allows a user to select a specific subset of crashes from the database, based on desired crash conditions. It has been further enhanced to identify cases based on fire/fuel leakage variables.

The NASS/CDS tool performs a query based on a series of limiting conditions, and then returns two sets of information. First, data relating to the generated subset of crashes is available in tabular form. Since a large set of crash variables may be returned, a user is able to perform sorting and scanning on the data to look for trends and relationships between variables not evident during the initial query.

The second piece of information returned is a list of all cases that meet the query criteria. A user can select a case for further investigation. Following case selection, an automated summary sheet(s) is

generated with significant crash variables presented along with applicable pictures and scene diagram.

This query tool was used to identify and summarize 228 cases from 1997-2000 NASS/CDS in which there was a fire occurrence. These cases have been further analyzed to identify certain attributes of the crashes, which include:

- Investigate crash mode distribution in these cases (frontal, side, rear, rollover, etc.).
- Identify the ignition sources of the fires, along with fire location within the vehicle.
- Investigate accidents of similar severity and impact mode in which there was no fire, looking at injury distribution comparisons.

Although this study is ongoing, some initial results are available. It should be noted that NASS/CDS weighting factors were not used in this study due to the complexity and relative randomness of fire events. It was felt that the weighting factors could not be definitively applied to the fire events.

When looking at impact direction, the cases were divided into categories of impact that would be associated with the fire event. For example, if a frontal impact occurred with another vehicle followed by a side impact to a tree, and the tree impact was the source of a ruptured fuel tank, this would be classified as a side impact for this study. Based on this criterion, frontal impacts accounted for 117 cases (51.3%), side impacts 42 cases (18.4%), rear impacts 14 cases (6.1%), and rollovers 55 cases (24.1%). These results can be seen in Figure 7. It is interesting to note that rear impacts had the lowest frequency of fire events.

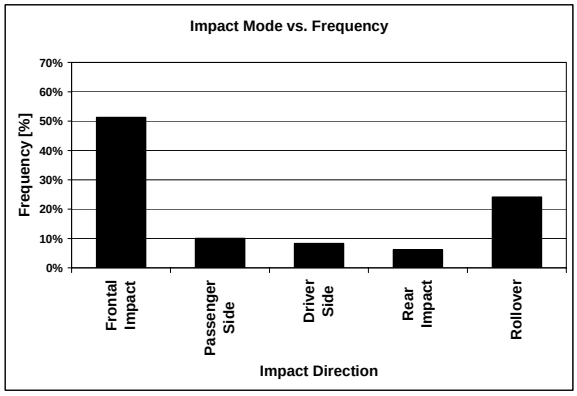

Figure 7. Distribution of fire events by impact direction.

Each impact mode is being further investigated to identify any possible trends. This includes impact mode in combination with impacting object and origin of the fire. Rollover events are being reviewed to understand the various contributions of the role events. This includes roll severity (number of ¼ turns), roll direction, and fire origin relative to roll events.

The location and/or origin of the fire can provide useful information to researchers looking to further improve vehicle design and prevent fire events. The distribution of the fire origin within these NASS/CDS cases is shown in Figure 8. Of particular interest is that a large majority of fires (147 cases – 64.5%) initiated inside the engine compartment. In 26 cases (11.4%) it could be definitively determined that the fuel tank was the source of the fire. Often times it is difficult or impossible to determine the fire origin. This typically occurs in cases in which the vehicle was completely engulfed. There were 39 cases (17.1%) with unknown fire origins. This distribution is similar to previous studies and warrants further investigation into specific sources of fire initiation within the engine compartment.

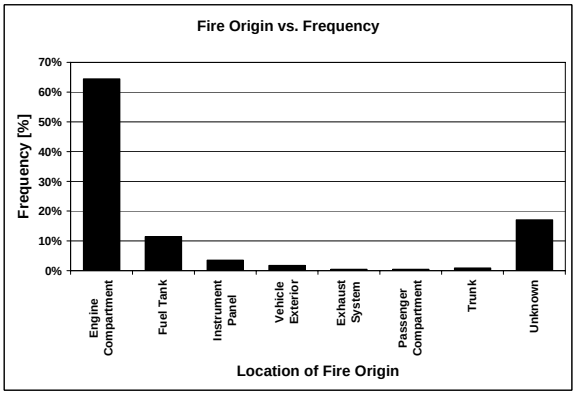

Figure 8. Distribution of fire origin/location.

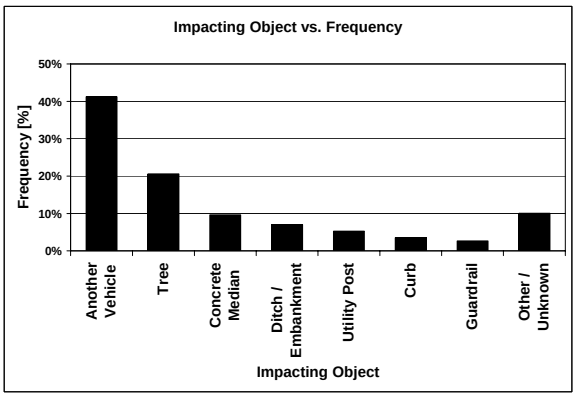

Figure 9. Distribution of fire events by impacting object.

This initial review of the data also identified the distribution of impacting objects for fire events (Figure 9). In 94 cases (41.2%) another vehicle was

the impacting object that was associated with the fire event. Although Figure 9 shows a more detailed breakdown of the impacting object, it can be seen that in 111 cases (48.7%) a fixed roadside object was the source of impact and the fire event. In a majority of these cases the fixed object is narrow and results in significant penetration at concentrated locations along the vehicle. Though further investigation is warranted and ongoing, impacts with fixed narrow objects account for a larger portion of the fuel tank related fires.

Of particular importance in any vehicle safety investigation is to study the relationships with occupant injury and fatality. While it is interesting to look at injury distributions within a particular type of event, it is also necessary to gage the relative importance of the findings. For this study, it can be done by comparing all crash events with fire events. Injury distributions based on MAIS is shown in Figure 10. The data is displayed for all fire event cases along side all non-fire cases. It should be noted that the MAIS for the fire cases is associated with the fire event. For example, if the crash victim had an AIS 5 associated with steering wheel contact, and an AIS 2 associated with the fire event, the case is classified as MAIS 2 for this study. This attempts to normalize to a certain extent for the fire event, but it should be noted that it is often difficult to discern these injuries at higher severities.

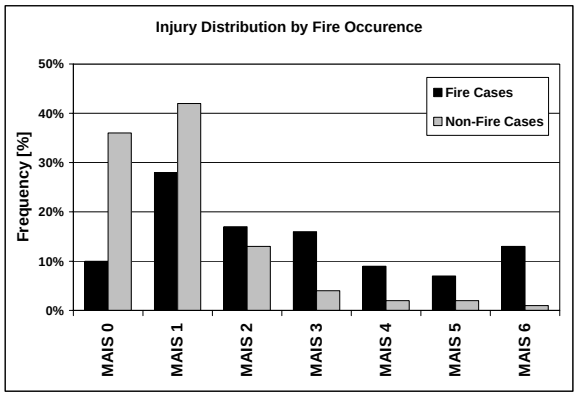

Figure 10. Injury distribution by MAIS for fire and non-fire cases.

Results show some interesting initial findings. Fire events tend to have a significantly greater percentage of MAIS 3+ associated injuries. While fire events are relatively infrequent, their occurrence tends to have greater associated harm. Further investigation into the injuries within each case is ongoing.

SURVEY OF STATE-OF-THE-ART IN FIRE SAFETY TECHNOLOGY

An investigation of the state-of-the-art in fuel systems has been undertaken with a focus on identifying fuel system fire safety technologies for preventing and/or mitigating post-crash fuel fires that may be in use today. An extensive survey will be conducted with in-vehicle evaluation and documentation of the various systems. Additionally, major fuel system components, such as the fuel tank itself, will be evaluated. The project is divided into two phases:

- Phase 1 defines the overall scope of the investigation and establishes procedures for carrying out the more specific review of individual systems. Included is a review of existing automotive fuel system standards.
- Phase 2 comprises the in-depth evaluation of the fuel systems from vehicles identified in Phase 1.

The work performed under Phase 1 of the project is discussed herein.

Forty two different fuel system performance standards from world wide standards agencies and governing bodies were reviewed as part of the investigation into the state-of-the-art in fuel systems. These standards have been summarized and reported previously [Fournier 2001].

Various design strategies or technologies associated with the fuel system, which includes the evaporative emissions hardware, have been identified as potential countermeasures for preventing or mitigating the likelihood of post-crash vehicle fires. These strategies or technologies, which may already be employed in existing vehicles, include:

- Filler check valve: If the filler hose is torn from the tank a check valve located at the spout on the tank would prevent excessive fuel loss.
- Shielding: Shields may be used to increase the fuel system's resistance to damage resulting from direct contact and debris by providing an additional layer of protection.
- Tank materials, thickness: The choice of tank materials (plastic vs. metal) and its thickness will affect the resistance to punctures, tearing or bursting.
- Multiple layered tanks: Although principally used to address emission issues, multiple layered constructions may improve robustness.
- Tank bladders: Compliant and tear resistant bladders contained inside a tank prevent fuel

leaks if the rigid outer shell of the tank system is compromised.

- Tear away fuel line connections with check valves: These connections are designed to disengage and seal if excessive tension is applied to the fuel lines.
- Fire shields/blankets: Fire retardant shields, affixed to the hood fall into place to smother engine compartment fires.
- Anti-siphoning: The routing of fuel lines are such that if severed they would not continue to siphon fuel from the tank.
- EFI Fuel Pump shut off: The fuel pump would be deactivated if a crash is detected.
- Active fire suppression systems: Fire detectors would trigger the release of fire suppressant chemicals.
- Tank additives: Reticulate materials placed inside the tank to prevent explosions of the tank.
- Location, tank environment and routing of fill and delivery lines: Placement of fuel system components relative to potentially intrusive or aggressive components to minimize damage in the event of a collision.
- Slip-in-tube drive shaft: In a frontal collision of a rear wheel drive vehicle, the drive shaft would collapse along its length to minimize damage to a rear mounted tank.

The North American fleet comprises over three hundred makes and models of vehicles, not including variations within a model. The inspection of each one is beyond the current scope of the review which intends to gain a cross-section view of the best practices in fuel system fire safety design. A subset of these vehicles has been proposed and consists of a cross section of vehicle type (car, SUV, truck, etc.), manufacturer, price range, country of origin, etc. Also, vehicles with known technology implementations will be reviewed.

Information on each vehicle is collected and input into a Microsoft Access© database. This includes, but is not limited to:

- Tank shape and placement
- Presence of technologies listed previously
- Routing of fuel lines and components associated with the fuel delivery system
- Type and location of batteries and power sources
- Proximity of potentially "aggressive" structural components

In addition to visual inspections, vehicle brochures and user manuals will be reviewed, along with repair and maintenance manuals. Accompanying digital photos are also placed in the database.

A sample vehicle inspection has been completed as part of phase 1 of this study. Phase 2 – the inspection of 70 vehicles – is underway and all data will enter the public domain upon completion.

EVALUATION OF PLASTIC FUEL TANKS OF VARIOUS SHAPES

The purpose of this program is to conduct comparison evaluations of existing plastic fuel tanks to performance standards applied in Europe and also to standards applied to tanks for trucks in the US. The tests also examined degradation in service. Two ages of tanks were tested; 1) "conditioned" tanks, not older than four years, and 2) "new" tanks, from original equipment manufacturers (OEMs). The conditioned tanks were from vehicles that have been operated in a warm climate in the vicinity of San Antonio, Texas. The new tanks were purchased from the OEM supply and not from an after market supplier. The project evaluated three different tank design shapes.

The three tank design shapes are as follows: 1) a "pancake" tank typical of tanks in front wheel drive cars with a thin shape mounted to an underbody near the rear seat area and in front of the rear axle; 2) a "long" tank with a narrow shape mounted inside the frame rail and in front of the rear axle; and 3) a "square" tank mounted behind the rear axle. The three types of tanks are shown in Figures 11-13.

Three types of tests were conducted for new and conditioned tanks for each of the three tank shapes. The tests were: fire resistance, concentrated energy cold impact, and high energy impact.

The fire resistance tests were conducted in accordance with the European Standard for plastic fuel tanks, ECE R 34, Annex 5, Fire Resistance Section. This standard requires the plastic tank to withstand a pool fire for two minutes without leaking. In this test, the tank is mounted on the actual vehicle and filled with gasoline to 50% of capacity. For one minute, the vehicle and tank were subjected to the full intensity of a fuel-fed pool fire positioned directly beneath the tank. For the second minute, the intensity of the fire was mitigated by covering the fire pan with a screen. If the tank survives for two minutes it is said to "pass."

In the research testing conducted under this project, a third condition was imposed. In this third condition, the screen was removed and the high intensity fire was continued until tank leakage occurred. Once

Figure 11. "Pancake" shaped tank pre-test.

Figure 14. "Pancake" tank after fire test.

Figure 12. "Long" shaped tank pre-test.

Figure 15. "Long" tank after fire test.

Figure 13. "Square" shaped tank pre-test.

Figure 16. "Square" tank after fire test.

leakage was observed, the fire was extinguished quickly by fire suppressants. The results reported in Table 3 shows the number of seconds after removal of the screen at 2 minutes until the tank leakage occurred

In these fire tests, all of the conditioned tanks were the original tanks installed on the 1998 model year vehicles that were subjected to the burn tests. These conditioned tanks were tested before the "new" tanks were installed on the same vehicle. In all cases, the fire exposure caused some loss of body material from the vehicle. Consequently, added area for ventilation might exist in the second test. To reduce the effects of differences in ventilation, the vehicle with the "pancake" tank was rebuilt for the second test. The

other vehicles suffered less degradation and were not rebuilt. The second test of the "square" tank resulted in tank leakage at 101 seconds – 19 seconds short of the requirement. This difference could be explained by the increased ventilation permitted by the test buck.

Table 3. Number of Seconds After Removal of Fire Screen Until Tank Leakage Occurred

Tank Type	New	Conditioned
Pancake	90	90
Long	38	21
Square	-19	10

Other observations made from the tests included the location and size of the initial leak that occurred before the fire was extinguished. The two pancake tanks leaked at the same place – the bottom left rear corner. In both cases, the leaks were very small. The two square tanks both leaked in locations that were associated with loading by the mounting strap. Both tanks also leaked or were severely weakened at the front right top corner due to sagging of the tank. The rate of leakage from the square tank was greater than for the pancake tank. The two long tanks both leaked due to sagging of the front part of the tank that overhung the mounting straps. The leakage occurred at the front of the tank or at the straps. The rate of leakage was greater than the square tank. The post test deformation of the "pancake" tank, the "long" tank, and the "square" tank are shown in Figures 14 through 16.

Impact resistance was conducted on three new and three seasoned tanks. The impact tests were of two types. First tests were conducted in accordance with the European Standard for plastic fuel tanks, ECE R 34, Annex 5, Section 1 "Impact Resistance". Second, tests were conducted in accordance with 49 CFR 393.67, "Liquid Fuel Tanks".

For the ECE R 34 impact resistance test, the tanks are filled to rated capacity and chilled to -40 degrees C. At this temperature, they are impacted by a pyramid shaped 15 kg mass at an energy level of 30.1 Nm. In the research tests, tanks were impacted at the right front corner at energy levels ranging from 30.1 Nm to 43.6 Nm. No leakage occurred in any of the tests.

Federal Motor Carrier Safety Regulation CFR 393.67 "Liquid Fuel Tanks" requires an impact test condition that has not been applied to passenger vehicles. Section (e) (1) of the standard applies to side-mounted tanks and requires a drop test of the tank. In this test, the tank is filled with water to a weight equal to the rated weight of fuel and dropped on its corner from a height of 30 ft. onto an unyielding surface. The standard limits the allowable leakage after the test to 1 oz per minute.

Table 4. Leakage rate in oz. per minute for Three Types of Tanks After 30 ft Drop Test per CFR 393.67 (e) (1)

Tank Type	New	Conditioned
Pancake	<1	<1
Long	<1	150
Square	<1	900

The results of the 30 ft drop tests are shown in Table 4. All of the new tanks and the seasoned pancake tank passed the test. However, both of the other seasoned tanks ruptured at the pinch-off separation. A typical breach of the tank is shown in Figure 17.

Figure 17. Seasoned "Long" Tank Post Drop Test

This limited research indicates that the tested tanks performed in a repeatable manner when subjected to ECE R 34, Annex 5, "Fire Resistance" Section. However, considerable difference in the margin for passing the test was present for the three tank types. In addition, the amount of leakage that occurred once the leak was initiated was vastly different. The behind the axle location of the "square" tank permitted the greatest amount of ventilation, and consequently may have been the most severe environment. The overhang of the long tank beyond the supporting straps appeared to be the most vulnerable feature of that tank shape. There was no identifiable difference between the performance of new and seasoned tanks in these tests.

All three tanks performed satisfactorily when subjected to the ECE R 34 Impact Resistance test, even when subjected to an impact with approximately

50% more energy than required by the test. No degradation was noted in the seasoned tanks.

All three new tanks performed satisfactorily when subjected to the Federal Motor Carrier Safety Regulation CFR 393.67 (e)(1) 30 ft. drop test. However, the seasoned "long" and "square" tanks leaked excessively after the drop. This result suggests some degradation of the resistance to severe impact with aging for these tanks.

DEVELOPMENT OF RECOMMENDED PRACTICE IN 42-VOLT APPLICATIONS

Major auto manufacturers are currently developing electrical systems that operate on 36-volt architectures, transitioning from the current 12-volt systems (14 volts when charging) typically used today. The 36 volt architecture charges at 42 volts, with possible voltage peaks as high as 58 volts. Current best practice and recommendations from ISO restrict the ability for human interface with voltages above 60 volts, thus the selection of the 36-volt architecture. Because the normal operating range is 42-volts, they are typically referred to as 42-volt systems.

There are several reasons why this transition is taking place. Power demands have been growing at about 6% per year for the last 15-20 years [SAE 2002, TOPTEC 2002, Intertech 2002]. Modern cars consume between one and three kilowatts of power. They are near the limit of what can be done with the 12-volt architecture. This growth in power demand results from the expanding use of electronics in autos: radio and hi-fi systems, navigation systems, use of electrical outlets for plug-in computers, etc. In the future, there are many conventional systems that can be driven electronically. Electrically assisted power steering is now on the market. Electric brakes, electric rear wheel steering, electric suspension and stability control, electric drive for water and oil pumps, advanced automatic crash notification (ACN) systems, electric air conditioning and heating systems, and 110 volt AC outlets are all new applications which may be attractive after 42 volts becomes available. Some of these new components have fuel economy, emissions, and/or safety benefits.

Another major trend is toward "mild hybrids," where the engine is shut off when stopped in traffic, and other systems, such as the air conditioning continue to operate. This technology is commonly referred to as an integrated starter generator and can provide approximately a 10% fuel economy improvement in city driving.

Even at 14-volts, there are fires caused by shorts and other malfunctions in the electrical systems. As was shown previously in the data analysis, more fires occur in frontal impacts, and initiate within the engine compartment. Since batteries are typically mounted in that region of the vehicle, and most of the under-hood fluids are flammable (including the engine coolant), there is reason to suspect that the battery may contribute to many under-hood fires. Batteries contain a great deal of energy (~ 3 million Joules for an 85 Ampere-hour battery). A short can dissipate hundreds of Watts, and can ignite surrounding flammable materials. A crushed battery can create either external or internal shorts and begin a heat release that can ignite the plastic battery case, and then spread to other under-hood materials.

If a circuit is broken with a 14-volt circuit, some sparking may occur, but not a sustained arc. With a 42-volt system there is likely to be a sustained arc when a circuit opens or there is a short to ground. This arc has tremendous power associated with it. It can easily produce 1000 Watts of power and release 1000 Joules per second. The temperature of the plasma can be 6000 C. This level of power can ignite most materials and can burn holes in sheet steel.

There is also another phenomenon called "Carbon Tracking" which can be present at 14 volts, but will be more common at 42 volts. It is caused by an electric field across an "insulator." "Insulators" can conduct small amounts of electricity and gradually convert the hydrocarbons in the plastic to carbon - which is a good conductor. After considerable time (i.e. 10-15 years of a vehicle lifetime), this deposit of carbon can grow until it is capable of conducting a large amount of current. Shortly after the current builds up, the material will effectively short and cause an arc, and the material can flash into flame.

This process is accelerated by having conducting liquids or solids on the surface of the conductor. Oil, dirt, grime and moisture, which are readily available in the engine compartment, can get on the plastic electrical components and speed-up the process. Road salt (and battery acid released in a crash) are also conductors which can exacerbate the situation. 42-volt systems (with associated voltage margins) will be more susceptible to this phenomenon.

MVFRI is working with the USCAR 42-volt Working Group to fund a 42-volt research project at Underwriter's Laboratories (UL). The purpose of this effort is to investigate Carbon Tracking phenomena with 25 different plastic samples that are

representative of materials used in connectors, terminal strips, and wire insulation. A 5% salt solution, typical of spray from salted roads in winter conditions, will be used to stress the material. One calibrated drop will fall every 30-seconds. After 50 drops (~25 minutes) the material is said to "pass." Some materials will be tested for 500 drops to validate that 50 drops is an acceptable stopping point.

The second effort under consideration will be to test a selection of materials to determine their flammability after being exposed to arcs likely to be created by 42-volt systems. These arcs are very high intensity and most materials will ignite if exposed long enough. The distinguishing factor is how much energy they can absorb before igniting. The number of materials is potentially much larger in number than for the carbon tracking testing. Any material that could be exposed to arcing needs to be tested - including some of the flammable under-hood fluids.

Results from these studies will be published at a later date and it is expected that these works may form the basis for recommended best practice and/or test standards associated with 42-volt systems.

CONCLUSIONS

For the year 2001, there were a total of 1,657 fatal crashes in which there was a fire. This is about 2.9% of all fatal crashes. Analysis of FARS data indicates that the fire rates in cars has dropped by 43.7% and LTVs (pick-ups, vans and SUVs) by 59.7% since the 1979. In 2000, the fire rate for passenger cars was 5.14 fires/million vehicle years, compared to 6.39 for light trucks.

For the years 1997-2000 the NASS/CDS contains 228 cases with fires. In these cases, frontal crashes accounted for 51.3% followed by rollover (24.1%) and side (18.4). Rear impacts accounted for the smallest fraction – 6.1%. The most frequent origin for the fire was the engine compartment, accounting for 64.5%. The fuel tank accounted for 11.4%. There were a relatively large number of unknown sources – 17.1%. The most frequent object impacted before the fire occurred was another vehicle (41.2%). However, a variety of roadside objects made up 48.7%. Narrow objects such as poles and trees contributed more than 25%.

Plastic tanks of three different shapes were evaluated to fire and impact testing as required by ECE R34, Annex 5 and US CFR 393.67 (e)(1). The ECE R34 fire test appeared to produce repeatable results and all tanks demonstrated the capability to withstand the test. All tanks passed the ECE R34 impact test. The US CFR 393.67 (e)(1) requires the tank containing water equal to its rated weight of fuel to be dropped on its corner from a height of 30 ft. All new tanks passed the test. However, two of three tanks that had been in service for three years failed the test. In both cases the failure was pinch off separation, suggesting a possible deterioration of this junction with time.

Research is now underway to identify state-of-the-art technologies in present day motor vehicles. Other research is oriented to developing test methods to assure the fire safety of materials used in vehicles with 42-volt electrical systems. The results of this research will be made public as it progresses.

ACKNOWLEDGMENTS

The authors would like to recognize that funding for this research was provided by General Motors in accordance with the White, Monson and Cashiola vs. General Motors Settlement Agreement.

The authors would also like to recognize the contributions of several researchers and/or organizations that provided technical input to this paper. This includes: Friedman Research Corporation for the statistical data analysis, Biokinetics and Associates Ltd. for the survey of the state-of-the-art technology, Southwest Research Institute for the evaluation of plastic fuel tanks, and the George Washington University for the NASS/CDS case study reviews. Further details of research and progress associated with this work may be obtained at the following internet address: *www.mvfri.org*.

REFERENCES

Davies, B. T., and Griffin, L. I., "A Clinical Evaluation of the Death Investigations for 206 Decedents Who Died in Passenger Vehicles that Experienced Post-Crash Fires," (January 2002) Docket # NHTSA-98-3588-170, Texas Transportation Institute.

Fournier, E., and Keown, M. "Survey of the State-Of-The-Art in Fuel System Fire Safety – Phase I," (2001) Prepared for MVFRI by Biokinetics and Associates, Ltd.

"42 Volt Systems" *SAE TOPTEC* (April 2002) Troy, MI.

"42 Volt Technology 2002," *SAE 2002 World Congress* (March 2002) SAE Publication SP-1661, Detroit, MI.

"Intertech Symposium on 42-volt systems," (Sept. 2002) Cleveland, OH.

Judicial District Court "Agreement of Settlement, White, Monson and Cashiola vs. General Motors", Number 42,865, DIV."D", 18th Judicial District Court, Parish of Iberville, Louisiana, June 27, 1996.

Malliaris, A.C., "Impact-Induced Car Fires: A Comprehensive Investigation," (1991) *Journal of Accident Analysis and Prevention*, Vol. 23, No. 4, pp 257-273.

National Highway Traffic Safety Administration, "U.S. DoT/General Motors Settlement Agreement Status Report, Year 4", NHTSA 2001.

Office of Defects Investigation, "Engineering Analysis Report and Initial Decision That The Subject Vehicles Contain A Safety Related Defect", National Highway Traffic Safety Administration, Engineering Analysis EA92-041, NHTSA October 17, 1994.

"Traffic Safety Facts 2001," (2002) National Center for Statistics and Analysis, NHTSA, 400 Seventh Street, S.W., Washington, D.C. 20590.

Attachment E
Smith v. DaimlerChrysler

RICCI-LEOPOLD

DaimlerChrysler Settles Suit Of Exploding Jeep Grand Cherokee Yet Makes No Design Changes To Remedy Problem

July 30th, 2002 (WEST PALM BEACH, Fla.) - Kenneth Smith's life changed in a mere blink of an eye on the morning of October 6, 2001. As his 1995 Jeep Grand Cherokee began traveling through an intersection with a green light his vehicle was rear-ended by a Lincoln Town Car. Immediately upon impact the Jeep burst into flames. Smith, a resident of Jacksonville, Florida, suffered burns to his abdomen, right hand and arm. He has undergone two skin graphs, and must wear special garments to protect his arm and hand.

Ken Smith was unaware, as are probably countless other individuals, that the 1995 Jeep Grand Cherokee (as well as the current models of the Grand Cherokee and Jeep Liberty) was unsafe because the fuel tank and filler neck was designed and installed in a location that is susceptible to rupture or puncture in a rear-end collision. In an accident the Jeep's fuel tank will often times rupture and allow gasoline to escape. This almost always presents a high risk of fire and explosion, which will lead to severe injury or death to the vehicle's occupants.

"This vehicle was a virtual time bomb poised to explode," said attorney, Ted Leopold, of Ricci~Leopold, P.A. , West Palm Beach. "The fuel tank of the 1995 model was located behind the rear axle. This puts the tank in a position that leaves it vulnerable to explosion if impacted by another vehicle. DaimlerChrysler could have located the fuel tank forward of the rear axle, as almost all of its competitors do. This would have provided greater protection to the fuel tank, and the occupants of the vehicle in the event of a rear impact collision. If nothing else the company should have at least provided a shield that would protect the fuel tank from rupture."

Today, Ken Smith is making great progress in his recovery from this horrendous accident. Ironically, one would think that the car that hit the back of Smith's Jeep, was

traveling at a high rate of speed. It was not! The vehicle was traveling 20-25 miles per hour at the time of impact.

DaimlerChrysler, settled with Smith for an undisclosed sum of money. However, this was no victory for consumers. Today, anyone can walk on to a DaimlerChrylser lot and purchase a new Grand Cherokee or Jeep Liberty and be at risk for this same type explosion. The fuel tank remains in a location that is susceptible to rupture, puncture or other damage that could cause a failure and allow fuel to escape. In addition, the fuel tank was designed with material that is susceptible to rupture and the fuel filler neck of the Jeeps are routed in such a way that they are susceptible to being torn away, pulled off, punctured or damaged in the event of an accident.

"Justice for Ken Smith was our first order of business in this case," said Leopold. "However, I am disappointed and horrified to see that DaimlerChrysler continues to manufacture these vehicles in this manner. Sadly, we are bound to see many more children and adults riding in these vehicles who will undoubtedly suffer severe burn injuries and even death from horrific car fires."

Founded in 1982, Ricci~Leopold, P.A., has built a reputation as one of the most successful personal injury law firms in the Southeast. The firm represents individuals who have been wrongfully injured in matters involving automotive crashworthiness, managed care litigation, insurance bad faith and coverage disputes, and personal injury. Ricci~Leopold, P.A. headquartered in West Palm Beach, Florida, has seven attorneys representing clients as well as an experienced and skilled research and investigative staff. For additional information, please visit the firm's website at http://www.riccilaw.com

Attachment F
Susan Kline Accident

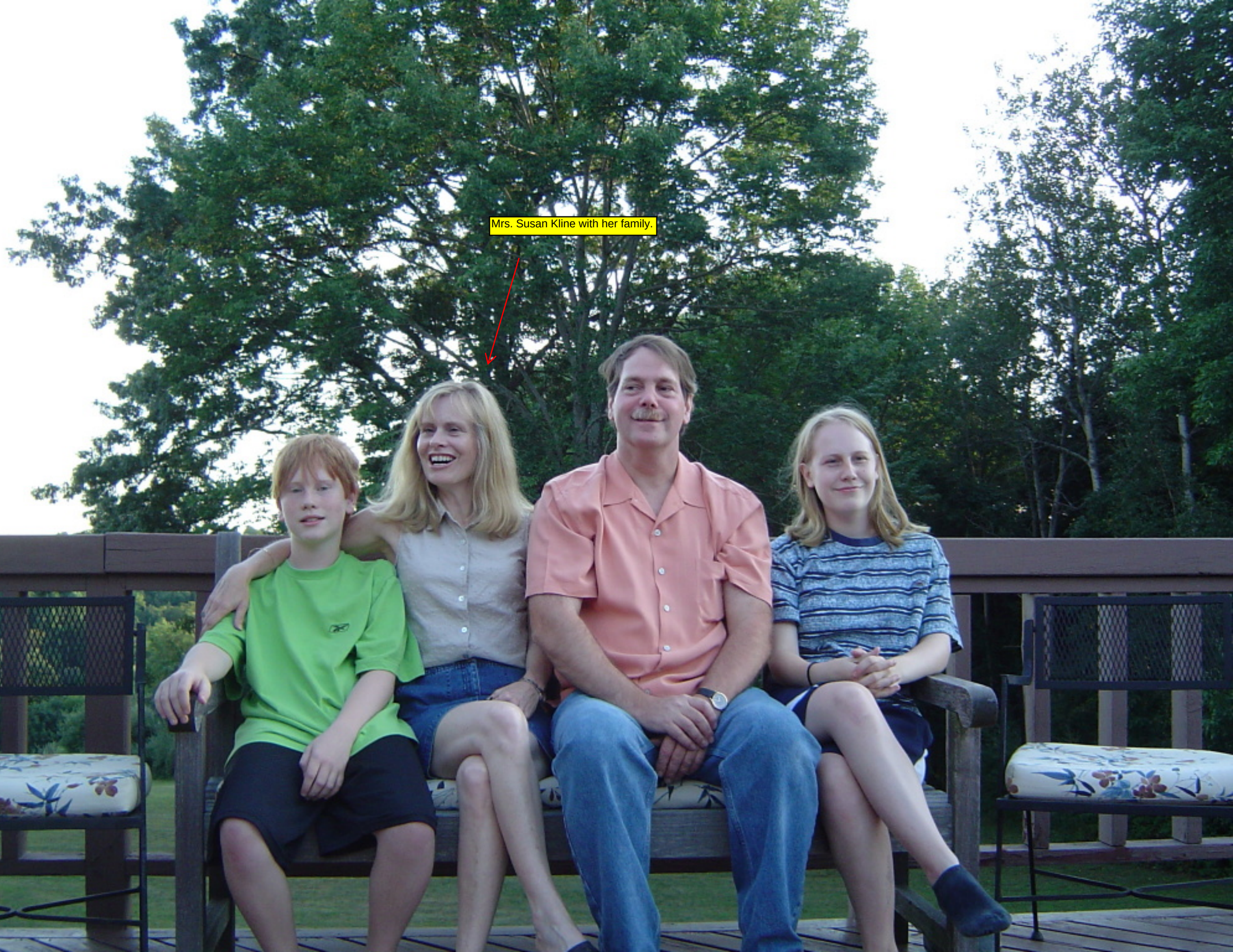
Mrs. Susan Kline with her family.

Skull

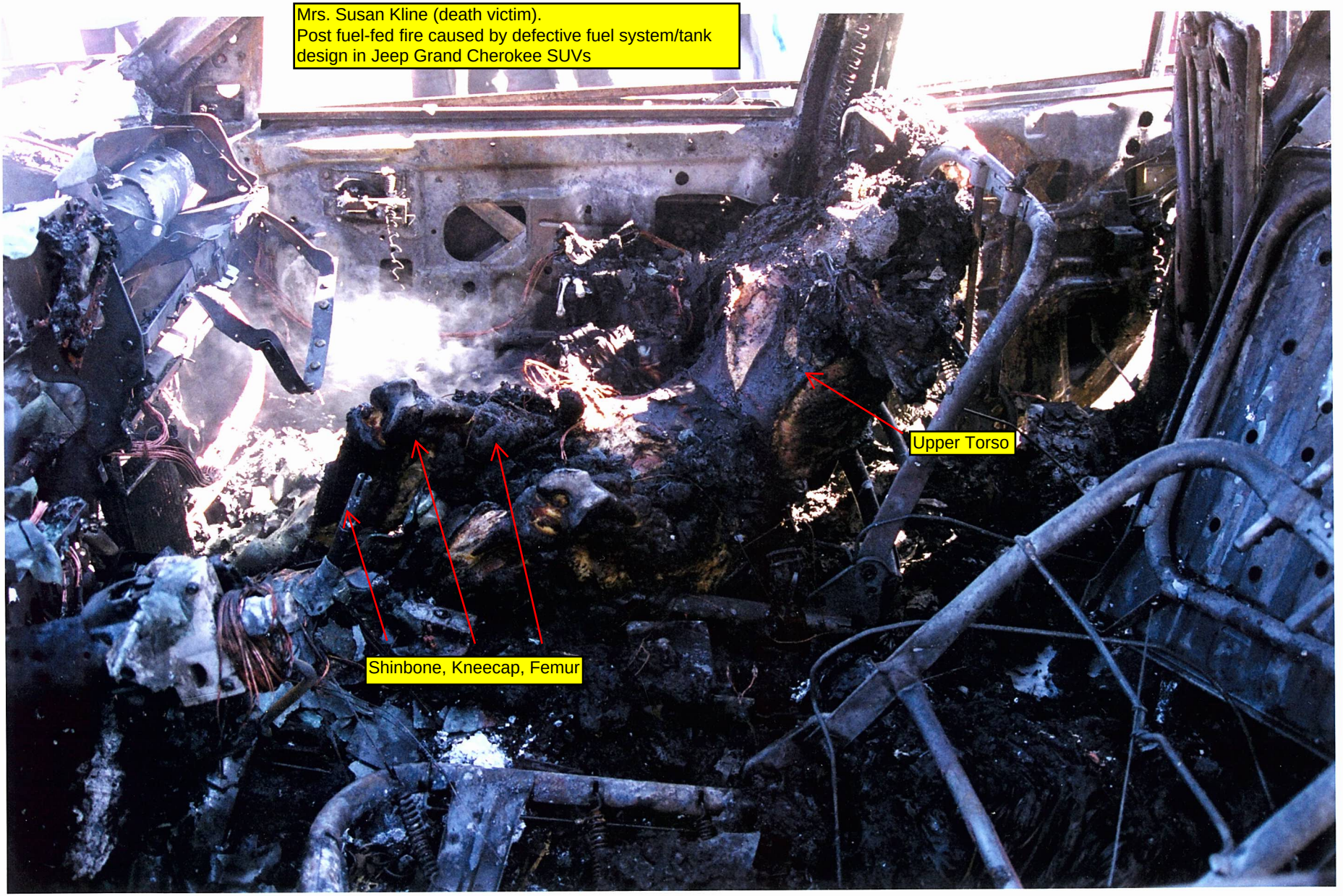
Mrs. Susan Kline (death victim).
Post fuel-fed fire caused by defective fuel system/tank design in Jeep Grand Cherokee SUVs
Upper Torso
Shinbone, Kneecap, Femur

Attachment G
Rodney Wood Accident Report

Law Enforcement and TxDOT Use ONLY

☒ FATAL ☐ CMV INVOLVED ☐ SCHOOL BUS RELATED ☐ RAILROAD RELATED ☐ MEDICAL ADVISORY BOARD ☐ HIT AND RUN ☐ AMENDMENT/SUPPLEMENT

Texas Peace Officer's Crash Report

Form CR-3
(Rev. 03/09)

Submission of Crash Records: This report may be submitted via the CRIS Web Portal, electronically submitted via XML, or by mailing to the Texas Department of Transportation, Crash Records, PO Box 149349, Austin, TX 78714.
Questions? Call: 512/486-5780

PLACE WHERE CRASH OCCURRED
COUNTY: TARRANT | CITY OR TOWN: FORT WORTH
IF CRASH WAS OUTSIDE CITY LIMITS INDICATE FROM NEAREST TOWN: ____ MILES ☐N ☐S ☐E ☐W OF ____
LOC #: 09-076903
ORI #:
TxDOT #:

ROAD ON WHICH CRASH OCCURRED: 2350 (BLOCK NUMBER) | NE LOOP 820 (STREET OR ROAD NAME) | (ROUTE NUMBER OR STREET CODE)
CONSTRUCTION ZONE WORKERS PRESENT: ☐YES ☐NO ☐YES ☐NO | SPEED LIMIT: 65

INTERSECTING STREET OR RR X'ING NUMBER: (BLOCK NUMBER) | (STREET OR ROAD NAME) | (ROUTE NUMBER OR STREET CODE)
CONSTRUCTION ZONE WORKERS PRESENT: ☐YES ☐NO ☐YES ☐NO | SPEED LIMIT:

NOT AT INTERSECTION: 100 ☒FT. ☐MI. ☐N ☐S ☐E ☒W OF 5300 MARK IV PARKWAY
(SHOW MILEPOST OR NEAREST INTERSECTING NUMBERED HIGHWAY IF NONE, SHOW NEAREST INTERSECTING STREET OR REFERENCE POINT)
MILEPOST:
LATITUDE:
LONGITUDE:

DATE OF CRASH: JULY (MONTH) 10 (DAY) 2009 (YEAR) | DAY OF WEEK: FRIDAY | HOUR: 5:35 ☐AM (IF EXACTLY NOON) ☒PM (OR MIDNIGHT, SO STATE)

UNIT # 1

1 (1-MOTOR VEHICLE 2-TRAIN 3-PEDALCYCLIST 4-PEDESTRIAN 5-MOTORIZED CONVEYANCE 6-TOWED 7-NON-CONTACT 8-OTHER)
VIN #: 1VH2B1E20Y6200129 | ALTERED VEHICLE HEIGHT: ☐YES ☒NO
YEAR MODEL: 00 | COLOR & MAKE: WHITE - ORION | MODEL NAME: BUS | BODY STYLE: | LICENSE PLATE: EXMP (YEAR) TX (STATE) 869182 (NUMBER)

DRIVER'S NAME: WARE (LAST) | RONNIE (FIRST) | D (M.I.) | 4008 HILLDALE FTWORTH, TX 76119 (ADDRESS (STREET, CITY, STATE, ZIP)) | 817-449-9925 (PHONE NUMBER)
DRIVER'S LICENSE: TX (STATE) | 14869672 (NUMBER) | B-CDL (CLASS/TYPE) | (ENDORSEMENTS) | (RESTRICTIONS) | 12/06/1970 (DATE OF BIRTH) | LICENSE STATUS: 1 (1-VALID 2-NOT VALID 3-SUSPENDED/REVOKED 4-CANCELLED/DENIED 5-EXPIRED 6-UNKNOWN)
DRIVER'S ETHNICITY: 3 (1-WHITE 2-HISPANIC 3-BLACK 4-ASIAN 5-OTHER) | DRIVER'S SEX: ☒MALE ☐FEMALE | DRIVER'S OCCUPATION: BUS DRIVER | POLICE, FIREFIGHTER, EMS, ON EMERGENCY ☐ IF CHECKED, PLEASE EXPLAIN IN NARRATIVE

TYPE OF ALCOHOL SPECIMEN TAKEN (1-BREATH 2-BLOOD 3-URINE 4-NONE 5-REFUSED): 4 | TEST RESULTS:
TYPE OF DRUG SPECIMEN TAKEN (1-BLOOD 2-URINE 3-NONE 4-REFUSED): 3 | TEST RESULTS: | DRUG CATEGORY 1. 2.

☐LESSEE ☒OWNER
FT WORTH TRANSIT AUTH (NAME (ALWAYS SHOW LESSEE IF LEASED, OTHERWISE SHOW OWNER))
1600 E LANCASTER FTW TX 76102 (ADDRESS (STREET, CITY, STATE, ZIP))

LIABILITY INSURANCE: ☒YES ☐NO ☐EXP (INSURANCE COMPANY) | (POLICY NUMBER) | VEHICLE DAMAGE RATING: 12-VB-7-FD-3

UNIT # 2

1 (1-MOTOR VEHICLE 2-TRAIN 3-PEDALCYCLIST 4-PEDESTRIAN 5-MOTORIZED CONVEYANCE 6-TOWED 7-NON-CONTACT 8-OTHER)
VIN #: 1J4GX48S94C249693 | ALTERED VEHICLE HEIGHT: ☐YES ☒NO
YEAR MODEL: 04 | COLOR & MAKE: BLK / JEEP | MODEL NAME: GRAND CHEROKEE | BODY STYLE: SUV | LICENSE PLATE: 09 (YEAR) TX (STATE) X34BBC (NUMBER)

DRIVER'S NAME: WOOD (LAST) | RODNEY (FIRST) | R (M.I.) | 16125 HOLLYHILL CT JUSTIN TX 76247 (ADDRESS (STREET, CITY, STATE, ZIP)) | (PHONE NUMBER)
DRIVER'S LICENSE: TX (STATE) | 19721212 (NUMBER) | CM (CLASS/TYPE) | (ENDORSEMENTS) | (RESTRICTIONS) | 12/12/1972 (DATE OF BIRTH) | LICENSE STATUS: 1 (1-VALID 2-NOT VALID 3-SUSPENDED/REVOKED 4-CANCELLED/DENIED 5-EXPIRED 6-UNKNOWN)
DRIVER'S ETHNICITY: W (1-WHITE 2-HISPANIC 3-BLACK 4-ASIAN 5-OTHER) | DRIVER'S SEX: ☒MALE ☐FEMALE | DRIVER'S OCCUPATION: | POLICE, FIREFIGHTER, EMS, ON EMERGENCY ☐ IF CHECKED, PLEASE EXPLAIN IN NARRATIVE

TYPE OF ALCOHOL SPECIMEN TAKEN (1-BREATH 2-BLOOD 3-URINE 4-NONE 5-REFUSED): 4 | TEST RESULTS:
TYPE OF DRUG SPECIMEN TAKEN (1-BLOOD 2-URINE 3-NONE 4-REFUSED): 3 | TEST RESULTS: | DRUG CATEGORY 1. 2.

☐LESSEE ☒OWNER
SAME AS DRIVER (NAME (ALWAYS SHOW LESSEE IF LEASED, OTHERWISE SHOW OWNER))
(ADDRESS (STREET, CITY, STATE, ZIP))

LIABILITY INSURANCE: ☒YES ☐NO ☐EXP | PROGRESSIVE INS (INSURANCE COMPANY) | 62491286 (POLICY NUMBER) | VEHICLE DAMAGE RATING: 06-BD7-FD4-VB7

DAMAGE TO PROPERTY OTHER THAN VEHICLES

OBJECT | NAME AND ADDRESS OF OWNER | FEET FROM CURB | $ DAMAGE ESTIMATE

IN YOUR OPINION, DID THIS CRASH RESULT IN AT LEAST $1,000.00 DAMAGE TO ANY ONE PERSON'S PROPERTY? ☒YES ☐NO

CHARGES FILED

NAME | CHARGE | CITATION #
NAME | CHARGE | CITATION #

TIME NOTIFIED OF CRASH: 07/10/09 (DATE) 6:23PM (HOUR) | HOW: POLICE RADIO | TIME ARRIVED AT SCENE: 07/10/09 (DATE) 6:53PM (HOUR) | DATE OF REPORT: 07/11/09

TYPED OR PRINTED NAME OF INVESTIGATOR: DETECTIVE TDP DAVIS | ID #: 1965 | AGENCY: FWPD | DIST/AREA: D13 | REPORT COMPLETE: ☐YES ☒NO

Form CR-3
(Rev. 03/09)
Page 2 of 2

SEAT POSITION	SOLICITATION	EJECTED	RESTRAINT USED	AIRBAG	HELMET USE	INJURY SEVERITY
1-FRONT LEFT 2-FRONT CENTER 3-FRONT RIGHT 4-SECOND SEAT LEFT 5-SECOND SEAT CENTER 6-SECOND SEAT RIGHT 7-THIRD SEAT LEFT 8-THIRD SEAT CENTER 9-THIRD SEAT RIGHT 10-CARGO AREA 11-OUTSIDE VEHICLE 12-UNKNOWN	INDICATES A PERSON'S DESIRE TO RECEIVE CONTACT FROM PERSONS SEEKING PROFESSIONAL EMPLOYMENT AS/FOR AN ATTORNEY, CHIROPRACTOR, PHYSICIAN, SURGEON, PRIVATE INVESTIGATOR, OR ANY OTHER PERSON REGISTERED OR LICENSED BY A HEALTH CARE REGULATORY AGENCY (Y=SOLICIT, N=NO SOLICIT)	1-NO 2-YES 3-YES, PARTIAL 4-NOT APPLICABLE 5-UNKNOWN	1-SHOULDER & LAP BELT 2-SHOULDER BELT ONLY 3-LAP BELT ONLY 4-CHILD SEAT, FACING FORWARD 5-CHILD SEAT, FACING REAR 6-CHILD SEAT, UNKNOWN 7-BOOSTER SEAT 8-NONE 9-OTHER 10-UNKNOWN	1-NOT APPLICABLE 2-NOT DEPLOYED 3-DEPLOYED, FRONT 4-DEPLOYED, SIDE 5-DEPLOYED, OTHER 6-UNKNOWN	1-WORN, DAMAGED 2-WORN, NOT DAMAGED 3-WORN, UNK, DAMAGE 4-NOT WORN 5-UNKNOWN IF WORN	K-KILLED A-INCAPACITATING INJURY B-NON INCAPACITATING INJURY C-POSSIBLE INJURY N-NOT INJURED U-UNKNOWN

UNIT # 1 — TOWED DUE TO DISABLING DAMAGE: ☒ YES ☐ NO — VEHICLE REMOVED TO 1600 E LANCASTER — BY ABC WRECKER

ITEM #	SEAT POSITION	NAME (LAST, FIRST, MI) / ADDRESS	SOL	EJECTED	RESTRAINT USED	AIRBAG	HELMET	AGE	SEX	INJURY CODE
1	1	SEE FRONT	N	1	1	2	4	38	M	B
2	3	RAGLAND,GARY 4601 GOLD ROCK FTW,TX. 76137	N	1	9	1	4	45	M	C
3										
4										
5										

UNIT # 2 — TOWED DUE TO DISABLING DAMAGE: ☒ YES ☐ NO — VEHICLE REMOVED TO 1301 E NORTHSIDE DR — BY FORT WORTH WRECKER

ITEM #	SEAT POSITION	NAME (LAST, FIRST, MI) / ADDRESS	SOL	EJECTED	RESTRAINT USED	AIRBAG	HELMET	AGE	SEX	INJURY CODE
6	1	SEE FRONT	N	1	1	6	4	36	M	K
7										
8										
9										
10										

PED., PEDAL., MOT. CONVEY. ETC.	CASUALTY NAME (LAST, FIRST, MI) / ADDRESS	SOL	ALCOHOL SPECIMEN TAKEN	RESULT	DRUG SPECIMEN TAKEN	RESULT	HELMET	AGE	SEX	INJURY CODE

DISPOSITION OF KILLED OR INJURED

ITEM #'S	TAKEN TO	BY	IF AMBULANCE USED, SHOW: TIME NOTIFIED	TIME ARRIVED AT SCENE	AMBULANCE UNIT #	# OF ATTENDANTS INCLUDING DRIVER	# OF PERSONS TRANSPORTED FOR TREATMENT
1	HARRIS DOWTOWN	MED-STAR 49	5:38P	5:43P	49	2	1
6	TCME OFFICE	WL LAWSON FOUNDATIO	1930	2000		2	

COMPLETE THIS SECTION IF PERSON KILLED (If a driver or occupant dies within 30 days of the crash, please complete this area and mail the supplement to the Crash Records Bureau)

ITEM #	DATE OF DEATH	TIME OF DEATH	ITEM #	DATE OF DEATH	TIME OF DEATH	ITEM #	DATE OF DEATH	TIME OF DEATH	ITEM #	DATE OF DEATH	TIME OF DEATH
6	071009	1735									

INVESTIGATOR'S NARRATIVE OPINION OF WHAT HAPPENED (ATTACH ADDITIONAL SHEETS IF NECESSARY)

Unit 1 was E/B 2350 NE Loop 820 in left lane. Driver 1 said unit 2 slammed on brakes. Unit 2 was struck by unit 1. Unit 2 then struck unit 3. Unit 5 states unit 4 who was behind him was driving fast and he tried to move out of the way and was then rear ended by unit 4. Driver unit 2 was deceased on the scene.

DIAGRAM

INDICATE NORTH

1-TWO-WAY, NOT DIVIDED
2-TWO-WAY, DIVIDED, UNPROTECTED MEDIAN
3-TWO-WAY, DIVIDED, PROTECTED BARRIER
4-ONE WAY
9-UNKNOWN

FACTORS AND CONDITIONS LISTED ARE THE INVESTIGATOR'S OPINION

UNIT #	FACTORS/CONDITIONS CONTRIBUTING			OTHER FACTORS/CONDITIONS MAY OR MAY NOT HAVE CONTRIBUTED			VEHICLE DEFECTS CONTRIBUTING		VEHICLE DEFECTS MAY HAVE CONTRIBUTED	
	1	2	3	1	2	3	1	2	1	2
1	22									
	1	2	3	1	2	3	1	2	1	2

1-ANIMAL ON ROAD - DOMESTIC
2-ANIMAL ON ROAD - WILD
3-BACKED WITHOUT SAFETY
4-CHANGED LANE WHEN UNSAFE
5-13 SEE VEHICLE DEFECTS
14-DISABLED IN TRAFFIC LANE
15-DISREGARD STOP AND GO SIGNAL
16-DISREGARD STOP SIGN OR LIGHT
17-DISREGARD TURN MARKS AT INTERSECTION
18-DISREGARD WARNING SIGN AT CONSTRUCTION
19-DISTRACTION IN VEHICLE
20-DRIVER INATTENTION
21-DROVE WITHOUT HEADLIGHTS
22-FAILED TO CONTROL SPEED
23-FAILED TO DRIVE IN SINGLE LANE
24-FAILED TO GIVE HALF OF ROADWAY
25-FAILED TO HEED WARNING SIGN
26-FAILED TO PASS TO LEFT SAFELY
27-FAILED TO PASS TO RIGHT SAFELY
28-FAILED TO GIVE SIGNAL OR WRONG SIGNAL
29-FAILED TO STOP AT PROPER PLACE
30-FAILED TO STOP FOR SCHOOL BUS
31-FAILED TO STOP FOR TRAIN
32-FAILED TO YIELD ROW - EMERGENCY VEHICLE
33-FAILED TO YIELD ROW - OPEN INTERSECTION
34-FAILED TO YIELD ROW - PRIVATE DRIVE
35-FAILED TO YIELD ROW - STOP SIGN
36-FAILED TO YIELD ROW - TO PEDESTRIAN
37-FAILED TO YIELD ROW - TURNING LEFT
38-FAILED TO YIELD ROW - TURN ON RED
39-FAILED TO YIELD ROW - YIELD SIGN
40-FATIGUED OR ASLEEP
41-FAULTY EVASIVE ACTION
42-FIRE IN VEHICLE
43-FLEEING OR EVADING POLICE
44-FOLLOWED TOO CLOSELY
45-HAD BEEN DRINKING
46-HANDICAPPED DRIVER (EXP. IN NARRATIVE)
47-ILL (EXP. IN NARRATIVE)
48-IMPAIRED VISIBILITY (EXP. IN NARRATIVE)
49-IMPROPER START FROM PARKED POSITION
50-LOAD NOT SECURED
51-OPENED DOOR INTO TRAFFIC LANE
52-OVERSIZE VEHICLE OR LOAD
53-OVERTAKE AND PASS INSUFFICIENT CLEARANCE
54-PARKED AND FAILED TO SET BRAKES
55-PARKED IN TRAFFIC LANE
56-PARKED WITHOUT LIGHTS
57-PASSED IN NO PASSING ZONE
58-PASSED ON RIGHT SHOULDER
59-PED/PEDAL MOT. CON. FTYROW TO VEHICLE
60-SPEEDING-UNSAFE (UNDER LIMIT)
61-SPEEDING OVER LIMIT
62-TAKING MEDICATION (EXP. IN NARRATIVE)
63-TURNED IMPROPERLY - CUT CORNER ON LEFT
64-TURNED IMPROPERLY - WIDE RIGHT
65-TURNED IMPROPERLY - WRONG LANE
66-TURNED WHEN UNSAFE
67-UNDER INFLUENCE - ALCOHOL
68-UNDER INFLUENCE - DRUG
69-WRONG SIDE APPROACH OR IN INTERSECTION
70-WRONG SIDE-NOT PASSING
71-WRONG WAY - ONE WAY ROAD
72-CELL/MOBILE PHONE USE
73-ROAD RAGE
74-OTHER FACTOR (WRITE ON LINE)

VEHICLE DEFECTS
5-DEFECTIVE OR NO HEADLAMPS
6-DEFECTIVE OR NO STOP LAMPS
7-DEFECTIVE OR NO TAIL LAMPS
8-DEFECTIVE OR NO TURN SIG. LAMPS
9-DEFECTIVE OR NO TRAILER BRAKES
10-DEFECTIVE OR NO VEHICLE BRAKES
11-DEFECTIVE OR NO STEERING MECH
12-DEFECTIVE OR SLICK TIRES
13-DEFECTIVE TRAILER HITCH

TRAFFIC CONTROL
1-NONE
2-INOPERATIVE
3-OFFICER
4-FLAGMAN
5-SIGNAL LIGHT
6-FLASHING RED LIGHT
7-FLASHING YELLOW LIGHT
8-STOP SIGN
9-YIELD SIGN
10-WARNING SIGN
11-CENTER STRIPED/DIVIDER
12-NO PASSING ZONE
13-RR GATE/SIGNAL
14-SCHOOL ZONE
15-CROSSWALK
16-BIKE LANE
17-OTHER
11

ROADWAY RELATION
1-ON ROADWAY
2-OFF ROADWAY
3-SHOULDER
4-MEDIAN
1

PART OF ROADWAY
1-MAIN LANE
2-SERVICE ROAD
3-ENTRANCE RAMP
4-EXIT RAMP
5-CONNECTOR
6-DETOUR
7-OTHER
1

ROADWAY ALIGNMENT
1-STRAIGHT, LEVEL
2-STRAIGHT, GRADE
3-STRAIGHT, HILLCREST
4-CURVE, LEVEL
5-CURVE, GRADE
6-CURVE, HILLCREST
7-OTHER
8-UNKNOWN
3

LIGHT CONDITION
1-DAYLIGHT
2-DARK, NOT LIGHTED
3-DARK, LIGHTED
4-DARK, UNK LIGHTED
5-DAWN
6-DUSK
8-OTHER
9-UNKNOWN
1

TYPE OF ROAD SURFACE
1-CONCRETE
2-BLACKTOP
3-BRICK
4-GRAVEL
5-DIRT
6-OTHER
7-UNKNOWN
2

WEATHER
1-CLEAR/CLOUDY
2-RAIN
3-SLEET/HAIL
4-SNOW
5-FOG
6-BLOWING SAND/SNOW
7-SEVERE CROSSWINDS
8-OTHER
9-UNKNOWN
1

SURFACE CONDITION
1-DRY
2-WET
3-STANDING WATER
4-SNOW
5-SLUSH
6-ICE
7-SAND, MUD, DIRT
8-OTHER
9-UNK
1

Law Enforcement and TxDOT Use ONLY

☒ FATAL ☐ CMV INVOLVED ☐ SCHOOL BUS RELATED ☐ RAILROAD RELATED ☐ MEDICAL ADVISORY BOARD ☐ HIT AND RUN ☐ AMENDMENT/SUPPLEMENT

Texas Peace Officer's Crash Report

Form CR-3
(Rev. 03/09)

Submission of Crash Records: This report may be submitted via the CRIS Web Portal, electronically submitted via XML, or by mailing to the Texas Department of Transportation, Crash Records, PO Box 149349, Austin, TX 78714.
Questions? Call: 512/486-5780

PLACE WHERE CRASH OCCURRED
COUNTY: TARRANT
CITY OR TOWN: FORT WORTH
IF CRASH WAS OUTSIDE CITY LIMITS INDICATE FROM NEAREST TOWN: ____ MILES ☐N ☐S ☐E ☐W OF ____

LOC #: 09-076903
ORI #:
TxDOT #:

ROAD ON WHICH CRASH OCCURRED: 2350 (BLOCK NUMBER) NE LOOP 820 (STREET OR ROAD NAME) ____ (ROUTE NUMBER OR STREET CODE)
CONSTRUCTION ZONE WORKERS PRESENT ☐YES ☐NO ☐YES ☐NO SPEED LIMIT 65

INTERSECTING STREET OR RR X'ING NUMBER: ____ (BLOCK NUMBER) ____ (STREET OR ROAD NAME) ____ (ROUTE NUMBER OR STREET CODE)
CONSTRUCTION ZONE WORKERS PRESENT ☐YES ☐NO ☐YES ☐NO SPEED LIMIT ____

NOT AT INTERSECTING 100 ☒FT. ☐MI. ☐N ☐S ☐E ☒W OF 5300 MARK IV PARKWAY (SHOW MILEPOST OR NEAREST INTERSECTING NUMBERED HIGHWAY. IF NONE, SHOW NEAREST INTERSECTING STREET OR REFERENCE POINT)
MILEPOST:
LATITUDE:
LONGITUDE:

DATE OF CRASH: JULY (MONTH) 10 (DAY) 2009 (YEAR)
DAY OF WEEK: FRIDAY
HOUR: 5:35 ☐AM (IF EXACTLY NOON) ☒PM (OR MIDNIGHT, SO STATE)

UNIT # 3

1 (1-MOTOR VEHICLE 2-TRAIN 3-PEDALCYCLIST 4-PEDESTRIAN 5-MOTORIZED CONVEYANCE 6-TOWED 7-NON-CONTACT 8-OTHER)
VIN #: 2CNDL63F966034560
ALTERED VEHICLE HEIGHT ☐YES ☒NO

YEAR MODEL: 06
COLOR & MAKE: MAROON - CHEVY
MODEL NAME: EQUNOX
BODY STYLE: SUV
LICENSE PLATE: 09 (YEAR) TX (STATE) BMN903 (NUMBER)

DRIVER'S NAME: HORN (LAST) PAUL (FIRST) D (M.I.)
ADDRESS (STREET, CITY, STATE, ZIP): 9025 BAYARD ST KELLER, TX. 76248
PHONE NUMBER:

DRIVER'S LICENSE: TX (STATE) 19640406 (NUMBER) CM (CLASS/TYPE) ____ (ENDORSEMENTS) ____ (RESTRICTIONS) 04/06/1964 (DATE OF BIRTH)
LICENSE STATUS: 1 (1-VALID 2-NOT VALID 3-SUSPENDED/REVOKED 4-CANCELLED/DENIED 5-EXPIRED 6-UNKNOWN)

DRIVER'S ETHNICITY: 1 (1-WHITE 2-HISPANIC 3-BLACK 4-ASIAN 5-OTHER)
DRIVER'S SEX: ☒MALE ☐FEMALE
DRIVER'S OCCUPATION: ____ POLICE, FIREFIGHTER, EMS, ON EMERGENCY ☐ IF CHECKED, PLEASE EXPLAIN IN NARRATIVE

TYPE OF ALCOHOL SPECIMEN TAKEN (1-BREATH 2-BLOOD 3-URINE 4-NONE 5-REFUSED): 4 TEST RESULTS: ____
TYPE OF DRUG SPECIMEN TAKEN (1-BLOOD 2-URINE 3-NONE 4-REFUSED): 3 TEST RESULTS: ____ DRUG CATEGORY 1. ____ 2. ____

☐LESSEE ☒OWNER
NAME (ALWAYS SHOW LESSEE IF LEASED, OTHERWISE SHOW OWNER): SAME AS DRIVER
ADDRESS (STREET, CITY, STATE, ZIP):

LIABILITY INSURANCE: ☒YES ☐NO ☐EXP
INSURANCE COMPANY: PROGRESSIVE INS
POLICY NUMBER: 62491286
VEHICLE DAMAGE RATING: 06,VB7,BD4,FD4

UNIT # 4

1 (1-MOTOR VEHICLE 2-TRAIN 3-PEDALCYCLIST 4-PEDESTRIAN 5-MOTORIZED CONVEYANCE 6-TOWED 7-NON-CONTACT 8-OTHER)
VIN #: 1D7HA16K62J219983
ALTERED VEHICLE HEIGHT ☐YES ☒NO

YEAR MODEL: 02
COLOR & MAKE: BLUE - DODGE
MODEL NAME: 1500
BODY STYLE: P/U
LICENSE PLATE: 09 (YEAR) TX (STATE) 55RFT2 (NUMBER)

DRIVER'S NAME: DIAL (LAST) TRACY (FIRST) N (M.I.)
ADDRESS (STREET, CITY, STATE, ZIP): 1235 GILLILAND RD SPRINGTOWN, TX. 76082
PHONE NUMBER: 817-614-0608

DRIVER'S LICENSE: TX (STATE) 13714203 (NUMBER) C (CLASS/TYPE) ____ (ENDORSEMENTS) ____ (RESTRICTIONS) 12/20/1984 (DATE OF BIRTH)
LICENSE STATUS: 1 (1-VALID 2-NOT VALID 3-SUSPENDED/REVOKED 4-CANCELLED/DENIED 5-EXPIRED 6-UNKNOWN)

DRIVER'S ETHNICITY: 1 (1-WHITE 2-HISPANIC 3-BLACK 4-ASIAN 5-OTHER)
DRIVER'S SEX: ☐MALE ☒FEMALE
DRIVER'S OCCUPATION: ____ POLICE, FIREFIGHTER, EMS, ON EMERGENCY ☐ IF CHECKED, PLEASE EXPLAIN IN NARRATIVE

TYPE OF ALCOHOL SPECIMEN TAKEN (1-BREATH 2-BLOOD 3-URINE 4-NONE 5-REFUSED): 4 TEST RESULTS: ____
TYPE OF DRUG SPECIMEN TAKEN (1-BLOOD 2-URINE 3-NONE 4-REFUSED): 3 TEST RESULTS: ____ DRUG CATEGORY 1. ____ 2. ____

☐LESSEE ☒OWNER
NAME (ALWAYS SHOW LESSEE IF LEASED, OTHERWISE SHOW OWNER): SAME AS DRIVER
ADDRESS (STREET, CITY, STATE, ZIP):

LIABILITY INSURANCE: ☒YES ☐NO ☐EXP
INSURANCE COMPANY: STATE FARM
POLICY NUMBER: 4332595686002
VEHICLE DAMAGE RATING: 06,BD3,FD,2,RP2

DAMAGE TO PROPERTY OTHER THAN VEHICLES: ____

OBJECT | NAME AND ADDRESS OF OWNER | FEET FROM CURB | $ DAMAGE ESTIMATE

IN YOUR OPINION, DID THIS CRASH RESULT IN AT LEAST $1,000.00 DAMAGE TO ANY ONE PERSON'S PROPERTY? ☒YES ☐NO

CHARGES FILED

NAME ____ CHARGE ____ CITATION # ____
NAME ____ CHARGE ____ CITATION # ____

TIME NOTIFIED OF CRASH: 07/10/09 (DATE) 6:23P (HOUR) HOW: POLICE RADIO
TIME ARRIVED AT SCENE: 07/10/09 (DATE) 6:53P (HOUR)
DATE OF REPORT: 07/11/09

TYPED OR PRINTED NAME OF INVESTIGATOR: DETECTIVE TDP DAVIS ID #: 1965 AGENCY: FWOP DIST/AREA: D13
REPORT COMPLETE ☐YES ☒NO

SEAT POSITION	SOLICITATION	EJECTED	RESTRAINT USED	AIRBAG	HELMET USE	INJURY SEVERITY
1-FRONT LEFT 2-FRONT CENTER 3-FRONT RIGHT 4-SECOND SEAT LEFT 5-SECOND SEAT CENTER 6-SECOND SEAT RIGHT 7-THIRD SEAT LEFT 8-THIRD SEAT CENTER 9-THIRD SEAT RIGHT 10-CARGO AREA 11-OUTSIDE VEHICLE 12-UNKNOWN	INDICATES A PERSON'S DESIRE TO RECEIVE CONTACT FROM PERSONS SEEKING PROFESSIONAL EMPLOYMENT AS/FOR AN ATTORNEY, CHIROPRACTOR, PHYSICIAN, SURGEON, PRIVATE INVESTIGATOR, OR ANY OTHER PERSON REGISTERED OR LICENSED BY A HEALTH CARE REGULATORY AGENCY (Y=SOLICIT, N=NO SOLICIT)	1-NO 2-YES 3-YES, PARTIAL 4-NOT APPLICABLE 5-UNKNOWN	1-SHOULDER & LAP BELT 2-SHOULDER BELT ONLY 3-LAP BELT ONLY 4-CHILD SEAT, FACING FORWARD 5-CHILD SEAT, FACING REAR 6-CHILD SEAT, UNKNOWN 7-BOOSTER SEAT 8-NONE 9-OTHER 10-UNKNOWN	1-NOT APPLICABLE 2-NOT DEPLOYED 3-DEPLOYED, FRONT 4-DEPLOYED, SIDE 5-DEPLOYED, OTHER 6-UNKNOWN	1-WORN, DAMAGED 2-WORN, NOT DAMAGED 3-WORN, UNK, DAMAGE 4-NOT WORN 5-UNKNOWN IF WORN	K-KILLED A-INCAPACITATING INJURY B-NON INCAPACITATING INJURY C-POSSIBLE INJURY N-NOT INJURED U-UNKNOWN

UNIT # 3 — TOWED DUE TO DISABLING DAMAGE ☒ YES ☐ NO — VEHICLE REMOVED TO 1301 E NORTHSIDE DR — BY WESTLOOP TOWING

ITEM #	SEAT POSITION	NAME (LAST, FIRST, MI) / ADDRESS	SOL	EJECTED	RESTRAINT USED	AIRBAG	HELMET	AGE	SEX	INJURY CODE
1	1	SEE FRONT	N	1	1	6	4	44	M	B
2										
3										
4										
5										

UNIT # 4 — TOWED DUE TO DISABLING DAMAGE ☒ YES ☐ NO — VEHICLE REMOVED TO 1301 E NORTHSIDE DR — BY ABC WRECKER

ITEM #	SEAT POSITION	NAME (LAST, FIRST, MI) / ADDRESS	SOL	EJECTED	RESTRAINT USED	AIRBAG	HELMET	AGE	SEX	INJURY CODE
6	1	SEE FRONT	N	1	1	2	4	23	F	B
7	3	PARKS, SHAWNA	N	1	1	2	4		F	B
8										
9										
10										

PED., PEDAL., MOT. CONVEY. ETC.	CASUALTY NAME (LAST, FIRST, MI) / ADDRESS	SOL	ALCOHOL SPECIMEN TAKEN	RESULT	DRUG SPECIMEN TAKEN	RESULT	HELMET	AGE	SEX	INJURY CODE

DISPOSITION OF KILLED OR INJURED

ITEM #'S	TAKEN TO	BY	IF AMBULANCE USED, SHOW: TIME NOTIFIED	TIME ARRIVED AT SCENE	AMBULANCE UNIT #	# OF ATTENDANTS INCLUDING DRIVER	# OF PERSONS TRANSPORTED FOR TREATMENT
1	HARRIS HOSPITAL	MED STAR	5:46P	5:52P	60	2	3
6&7	PARKLAND MEM HOSP	MED STAR	5:45P	5:49P	43	2	

COMPLETE THIS SECTION IF PERSON KILLED (If a driver or occupant dies within 30 days of the crash, please complete this area and mail the supplement to the Crash Records Bureau)

ITEM #	DATE OF DEATH	TIME OF DEATH	ITEM #	DATE OF DEATH	TIME OF DEATH	ITEM #	DATE OF DEATH	TIME OF DEATH	ITEM #	DATE OF DEATH	TIME OF DEATH

INVESTIGATOR'S NARRATIVE OPINION OF WHAT HAPPENED (ATTACH ADDITIONAL SHEETS IF NECESSARY)

DIAGRAM

INDICATE NORTH

☐ 1-TWO-WAY, NOT DIVIDED
2-TWO-WAY, DIVIDED, UNPROTECTED MEDIAN
3-TWO-WAY, DIVIDED, PROTECTED BARRIER
4-ONE WAY
9-UNKNOWN

FACTORS AND CONDITIONS LISTED ARE THE INVESTIGATOR'S OPINION

UNIT #	FACTORS/CONDITIONS CONTRIBUTING			OTHER FACTORS/CONDITIONS MAY OR MAY NOT HAVE CONTRIBUTED			VEHICLE DEFECTS CONTRIBUTING		VEHICLE DEFECTS MAY HAVE CONTRIBUTED	
	1	2	3	1	2	3	1	2	1	2
	1	2	3	1	2	3	1	2	1	2

1-ANIMAL ON ROAD - DOMESTIC
2-ANIMAL ON ROAD - WILD
3-BACKED WITHOUT SAFETY
4-CHANGED LANE WHEN UNSAFE
5-13 SEE VEHICLE DEFECTS
14-DISABLED IN TRAFFIC LANE
15-DISREGARD STOP AND GO SIGNAL
16-DISREGARD STOP SIGN OR LIGHT
17-DISREGARD TURN MARKS AT INTERSECTION
18-DISREGARD WARNING SIGN AT CONSTRUCTION
19-DISTRACTION IN VEHICLE
20-DRIVER INATTENTION
21-DROVE WITHOUT HEADLIGHTS
22-FAILED TO CONTROL SPEED
23-FAILED TO DRIVE IN SINGLE LANE
24-FAILED TO GIVE HALF OF ROADWAY
25-FAILED TO HEED WARNING SIGN
26-FAILED TO PASS TO LEFT SAFELY
27-FAILED TO PASS TO RIGHT SAFELY
28-FAILED TO GIVE SIGNAL OR WRONG SIGNAL
29-FAILED TO STOP AT PROPER PLACE
30-FAILED TO STOP FOR SCHOOL BUS
31-FAILED TO STOP FOR TRAIN
32-FAILED TO YIELD ROW - EMERGENCY VEHICLE
33-FAILED TO YEILD ROW - OPEN INTERSECTION
34-FAILED TO YIELD ROW - PRIVATE DRIVE
35-FAILED TO YIELD ROW - STOP SIGN
36-FAILED TO YIELD ROW - TO PEDESTRIAN
37-FAILED TO YIELD ROW - TURNING LEFT
38-FAILED TO YIELD ROW - TURN ON RED
39-FAILED TO YIELD ROW - YIELD SIGN
40-FATIGUED OR ASLEEP
41-FAULTY EVASIVE ACTION
42-FIRE IN VEHICLE
43-FLEEING OR EVADING POLICE
44-FOLLOWED TOO CLOSELY
45-HAD BEEN DRINKING
46-HANDICAPPED DRIVER (EXP. IN NARRATIVE)
47-ILL (EXP. IN NARRATIVE)
48-IMPAIRED VISIBILITY (EXP. IN NARRATIVE)
49-IMPROPER START FROM PARKED POSITION
50-LOAD NOT SECURED
51-OPENED DOOR INTO TRAFFIC LANE
52-OVERSIZE VEHICLE OR LOAD
53-OVERTAKE AND PASS INSUFFICIENT CLEARANCE
54-PARKED AND FAILED TO SET BRAKES
55-PARKED IN TRAFFIC LANE
56-PARKED WITHOUT LIGHTS
57-PASSED IN NO PASSING ZONE
58-PASSED ON RIGHT SHOULDER
59-PED/PEDAL MOT. CON. FTYROW TO VEHICLE
60-SPEEDING-UNSAFE (UNDER LIMIT)
61-SPEEDING OVER LIMIT
62-TAKING MEDICATION (EXP. IN NARRATIVE)
63-TURNED IMPROPERLY - CUT CORNER ON LEFT
64-TURNED IMPROPERLY - WIDE RIGHT
65-TURNED IMPROPERLY - WRONG LANE
66-TURNED WHEN UNSAFE
67-UNDER INFLUENCE - ALCOHOL
68-UNDER INFLUENCE - DRUG
69-WRONG SIDE APPROACH OR IN INTERSECTION
70-WRONG SIDE-NOT PASSING
71-WRONG WAY - ONE WAY ROAD
72-CELL/MOBILE PHONE USE
73-ROAD RAGE
74-OTHER FACTOR (WRITE ON LINE)

VEHICLE DEFECTS
5-DEFECTIVE OR NO HEADLAMPS
6-DEFECTIVE OR NO STOP LAMPS
7-DEFECTIVE OR NO TAIL LAMPS
8-DEFECTIVE OR NO TURN SIG. LAMPS
9-DEFECTIVE OR NO TRAILER BRAKES
10-DEFECTIVE OR NO VEHICLE BRAKES
11-DEFECTIVE OR NO STEERING MECH
12-DEFECTIVE OR SLICK TIRES
13-DEFECTIVE TRAILER HITCH

TRAFFIC CONTROL — 11
1-NONE
2-INOPERATIVE
3-OFFICER
4-FLAGMAN
5-SIGNAL LIGHT
6-FLASHING RED LIGHT
7-FLASHING YELLOW LIGHT
8-STOP SIGN
9-YIELD SIGN
10-WARNING SIGN
11-CENTER STRIPE/DIVIDER
12-NO PASSING ZONE
13-RR GATE/SIGNAL
14-SCHOOL ZONE
15-CROSSWALK
16-BIKE LANE
17-OTHER

ROADWAY RELATION — 1
1-ON ROADWAY
2-OFF ROADWAY
3-SHOULDER
4-MEDIAN

PART OF ROADWAY — 1
1-MAIN LANE
2-SERVICE ROAD
3-ENTRANCE RAMP
4-EXIT RAMP
5-CONNECTOR
6-DETOUR
7-OTHER

ROADWAY ALIGNMENT — 3
1-STRAIGHT, LEVEL
2-STRAIGHT, GRADE
3-STRAIGHT, HILLCREST
4-CURVE, LEVEL
5-CURVE, GRADE
6-CURVE, HILLCREST
7-OTHER
8-UNKNOWN

LIGHT CONDITION — 1
1-DAYLIGHT
2-DARK, NOT LIGHTED
3-DARK, LIGHTED
4-DARK, UNK LIGHTED
5-DAWN
6-DUSK
8-OTHER
9-UNKNOWN

TYPE OF ROAD SURFACE — 2
1-CONCRETE
2-BLACKTOP
3-BRICK
4-GRAVEL
5-DIRT
6-OTHER
7-UNKNOWN

WEATHER — 1
1-CLEAR/CLOUDY
2-RAIN
3-SLEET/HAIL
4-SNOW
5-FOG
6-BLOWING SAND/SNOW
7-SEVERE CROSSWINDS
8-OTHER
9-UNKNOWN

SURFACE CONDITION — 1
1-DRY
2-WET
3-STANDING WATER
4-SNOW
5-SLUSH
6-ICE
7-SAND, MUD, DIRT
8-OTHER
9-UNK

Law Enforcement and TxDOT Use ONLY

☒ FATAL ☐ CMV INVOLVED ☐ SCHOOL BUS RELATED ☐ RAILROAD RELATED ☐ MEDICAL ADVISORY BOARD ☐ HIT AND RUN ☐ AMENDMENT/SUPPLEMENT

Texas Peace Officer's Crash Report

Form CR-3
(Rev. 03/09)

Submission of Crash Records: This report may be submitted via the CRIS Web Portal, electronically submitted via XML, or by mailing to the Texas Department of Transportation, Crash Records, PO Box 149349, Austin, TX 78714.
Questions? Call: 512/486-5780

PLACE WHERE CRASH OCCURRED
COUNTY: TARRANT
CITY OR TOWN: FORT WORTH
IF CRASH WAS OUTSIDE CITY LIMITS INDICATE FROM NEAREST TOWN: ____ MILES ☐N ☐S ☐E ☐W OF ____
LOC #: 09-076903
ORI #:
TxDOT #:

ROAD ON WHICH CRASH OCCURRED: 2350 (BLOCK NUMBER) NE LOOP 820 (STREET OR ROAD NAME) ____ (ROUTE NUMBER OR STREET CODE)
CONSTRUCTION ZONE WORKERS PRESENT ☐YES ☐NO ☐YES ☐NO SPEED LIMIT: 65
INTERSECTING STREET OR RR X'ING NUMBER: ____ (BLOCK NUMBER) ____ (STREET OR ROAD NAME) ____ (ROUTE NUMBER OR STREET CODE)
CONSTRUCTION ZONE WORKERS PRESENT ☐YES ☐NO ☐YES ☐NO SPEED LIMIT: ____
NOT AT INTERSECTION: 100 ☒FT. ☐MI. ☐N ☐S ☐E ☒W OF 5300 MARK IV PARKWAY (SHOW MILEPOST OR NEAREST INTERSECTING NUMBERED HIGHWAY IF NONE, SHOW NEAREST INTERSECTING STREET OR REFERENCE POINT)
MILEPOST:
LATITUDE:
LONGITUDE:

DATE OF CRASH: JULY (MONTH) 10 (DAY) 2009 (YEAR)
DAY OF WEEK: FRIDAY
HOUR: 5:35 ☐AM IF EXACTLY NOON ☒PM OR MIDNIGHT, SO STATE

UNIT # 5 | 1 (1-MOTOR VEHICLE 2-TRAIN 3-PEDALCYCLIST 4-PEDESTRIAN 5-MOTORIZED CONVEYANCE 6-TOWED 7-NON-CONTACT 8-OTHER)
VIN #: 2C3LA63H26H336630
ALTERED VEHICLE HEIGHT ☐YES ☒NO
YEAR MODEL: 06 COLOR & MAKE: BLACK CHRY MODEL NAME: 300 C BODY STYLE: 4DR LICENSE PLATE: 10 (YEAR) TX (STATE) 919KKG (NUMBER)
DRIVER'S NAME: ZAVALA (LAST) ROBERT JR (FIRST) ____ (M.I.) 2501 DURINGER RD FORT WORTH, TX 76133 (ADDRESS (STREET, CITY, STATE, ZIP)) ____ (PHONE NUMBER)
DRIVER'S LICENSE: TX (STATE) 16346783 (NUMBER) C (CLASS/TYPE) ____ (ENDORSEMENTS) ____ (RESTRICTIONS) 07/05/1976 (DATE OF BIRTH)
LICENSE STATUS: 1 (1-VALID 2-NOT VALID 3-SUSPENDED/REVOKED 4-CANCELLED/DENIED 5-EXPIRED 6-UNKNOWN)
DRIVER'S ETHNICITY: 2 (1-WHITE 2-HISPANIC 3-BLACK 4-ASIAN 5-OTHER) DRIVER'S SEX: ☒MALE ☐FEMALE DRIVER'S OCCUPATION: ____ POLICE, FIREFIGHTER, EMS, ON EMERGENCY ☐ IF CHECKED, PLEASE EXPLAIN IN NARRATIVE
TYPE OF ALCOHOL SPECIMEN TAKEN (1-BREATH 2-BLOOD 3-URINE 4-NONE 5-REFUSED): 4 TEST RESULTS: ____
TYPE OF DRUG SPECIMEN TAKEN (1-BLOOD 2-URINE 3-NONE 4-REFUSED): 3 TEST RESULTS: ____ DRUG CATEGORY 1. ____ 2. ____
☐LESSEE ☒OWNER DANIEL MARTINEZ (NAME (ALWAYS SHOW LESSEE IF LEASED, OTHERWISE SHOW OWNER)) 3601 FULLER FT WORTH, TX 76133 (ADDRESS (STREET, CITY, STATE, ZIP))
LIABILITY INSURANCE: ☒YES ☐NO ☐EXP FARMERS TX COUNTY MUTUAL (INSURANCE COMPANY) 68759945 (POLICY NUMBER)
VEHICLE DAMAGE RATING: 06,BD-2

UNIT # ____ | ____ (1-MOTOR VEHICLE 2-TRAIN 3-PEDALCYCLIST 4-PEDESTRIAN 5-MOTORIZED CONVEYANCE 6-TOWED 7-NON-CONTACT 8-OTHER)
VIN #:
ALTERED VEHICLE HEIGHT ☐YES ☐NO
YEAR MODEL: ____ COLOR & MAKE: ____ MODEL NAME: ____ BODY STYLE: ____ LICENSE PLATE: ____ (YEAR) ____ (STATE) ____ (NUMBER)
DRIVER'S NAME: ____ (LAST) ____ (FIRST) ____ (M.I.) ____ (ADDRESS (STREET, CITY, STATE, ZIP)) ____ (PHONE NUMBER)
DRIVER'S LICENSE: ____ (STATE) ____ (NUMBER) ____ (CLASS/TYPE) ____ (ENDORSEMENTS) ____ (RESTRICTIONS) ____ (DATE OF BIRTH)
LICENSE STATUS: ____ (1-VALID 2-NOT VALID 3-SUSPENDED/REVOKED 4-CANCELLED/DENIED 5-EXPIRED 6-UNKNOWN)
DRIVER'S ETHNICITY: ____ (1-WHITE 2-HISPANIC 3-BLACK 4-ASIAN 5-OTHER) DRIVER'S SEX: ☐MALE ☐FEMALE DRIVER'S OCCUPATION: ____ POLICE, FIREFIGHTER, EMS, ON EMERGENCY ☐ IF CHECKED, PLEASE EXPLAIN IN NARRATIVE
TYPE OF ALCOHOL SPECIMEN TAKEN (1-BREATH 2-BLOOD 3-URINE 4-NONE 5-REFUSED): ____ TEST RESULTS: ____
TYPE OF DRUG SPECIMEN TAKEN (1-BLOOD 2-URINE 3-NONE 4-REFUSED): ____ TEST RESULTS: ____ DRUG CATEGORY 1. ____ 2. ____
☐LESSEE ☐OWNER ____ (NAME (ALWAYS SHOW LESSEE IF LEASED, OTHERWISE SHOW OWNER)) ____ (ADDRESS (STREET, CITY, STATE, ZIP))
LIABILITY INSURANCE: ☐YES ☐NO ☐EXP ____ (INSURANCE COMPANY) ____ (POLICY NUMBER)
VEHICLE DAMAGE RATING: ____

DAMAGE TO PROPERTY OTHER THAN VEHICLES ____

OBJECT | NAME AND ADDRESS OF OWNER | FEET FROM CURB | $ DAMAGE ESTIMATE

IN YOUR OPINION, DID THIS CRASH RESULT IN AT LEAST $1,000.00 DAMAGE TO ANY ONE PERSON'S PROPERTY? ☒YES ☐NO

CHARGES FILED
NAME ____ CHARGE ____ CITATION # ____
NAME ____ CHARGE ____ CITATION # ____

TIME NOTIFIED OF CRASH: 07/10/09 (DATE) 6:23P (HOUR) HOW: POLICE RADIO
TIME ARRIVED AT SCENE: 07/10/09 (DATE) 6:53P (HOUR)
DATE OF REPORT: 07/11/09
TYPED OR PRINTED NAME OF INVESTIGATOR: DETCTIVE TDP DAVIS ID #: 1965 AGENCY: FWPD DIST/AREA: D13
REPORT COMPLETE ☐YES ☒NO

SEAT POSITION	SOLICITATION	EJECTED	RESTRAINT USED	AIRBAG	HELMET USE	INJURY SEVERITY
1-FRONT LEFT 2-FRONT CENTER 3-FRONT RIGHT 4-SECOND SEAT LEFT 5-SECOND SEAT CENTER 6-SECOND SEAT RIGHT 7-THIRD SEAT LEFT 8-THIRD SEAT CENTER 9-THIRD SEAT RIGHT 10-CARGO AREA 11-OUTSIDE VEHICLE 12-UNKNOWN	INDICATES A PERSON'S DESIRE TO RECEIVE CONTACT FROM PERSONS SEEKING PROFESSIONAL EMPLOYMENT AS/FOR AN ATTORNEY, CHIROPRACTOR, PHYSICIAN, SURGEON, PRIVATE INVESTIGATOR, OR ANY OTHER PERSON REGISTERED OR LICENSED BY A HEALTH CARE REGULATORY AGENCY (Y=SOLICIT, N=NO SOLICIT)	1-NO 2-YES 3-YES, PARTIAL 4-NOT APPLICABLE 5-UNKNOWN	1-SHOULDER & LAP BELT 2-SHOULDER BELT ONLY 3-LAP BELT ONLY 4-CHILD SEAT, FACING FORWARD 5-CHILD SEAT, FACING REAR 6-CHILD SEAT, UNKNOWN 7-BOOSTER SEAT 8-NONE 9-OTHER 10-UNKNOWN	1-NOT APPLICABLE 2-NOT DEPLOYED 3-DEPLOYED, FRONT 4-DEPLOYED, SIDE 5-DEPLOYED, OTHER 6-UNKNOWN	1-WORN, DAMAGED 2-WORN, NOT DAMAGED 3-WORN, UNK, DAMAGE 4-NOT WORN 5-UNKNOWN IF WORN	K-KILLED A-INCAPACITATING INJURY B-NON INCAPACITATING INJURY C-POSSIBLE INJURY N-NOT INJURED U-UNKNOWN

UNIT # 5 — TOWED DUE TO DISABLING DAMAGE ☐YES ☒NO — VEHICLE REMOVED TO DRIVEN AWAY — BY DRIVER

ITEM #	SEAT POSITION	NAME (LAST, FIRST, MI) / ADDRESS	SOL	EJECTED	RESTRAINT USED	AIRBAG	HELMET	AGE	SEX	INJURY CODE
1	1	SEE FRONT	N	1	1	2	4	32	M	N
2										
3										
4										
5										

UNIT # — TOWED DUE TO DISABLING DAMAGE ☐YES ☐NO — VEHICLE REMOVED TO _____ — BY _____

ITEM #	SEAT POSITION	NAME (LAST, FIRST, MI) / ADDRESS	SOL	EJECTED	RESTRAINT USED	AIRBAG	HELMET	AGE	SEX	INJURY CODE
6										
7										
8										
9										
10										

PED., PEDAL., MOT. CONVEY, ETC.	COMPLETED IF CASUALTIES NOT IN MOTOR VEHICLE CASUALTY NAME (LAST, FIRST, MI) / ADDRESS	SOL	ALCOHOL SPECIMEN TAKEN	RESULT	DRUG SPECIMEN TAKEN	RESULT	HELMET	AGE	SEX	INJURY CODE

DISPOSITION OF KILLED OR INJURED			IF AMBULANCE USED, SHOW				
ITEM #'S	TAKEN TO	BY	TIME NOTIFIED	TIME ARRIVED AT SCENE	AMBULANCE UNIT #	# OF ATTENDANTS INCLUDING DRIVER	# OF PERSONS TRANSPORTED FOR TREATMENT

COMPLETE THIS SECTION IF PERSON KILLED (If a driver or occupant dies within 30 days of the crash, please complete this area and mail the supplement to the Crash Records Bureau)

ITEM #	DATE OF DEATH	TIME OF DEATH	ITEM #	DATE OF DEATH	TIME OF DEATH	ITEM #	DATE OF DEATH	TIME OF DEATH	ITEM #	DATE OF DEATH	TIME OF DEATH

INVESTIGATOR'S NARRATIVE OPINION OF WHAT HAPPENED (ATTACH ADDITIONAL SHEETS IF NECESSARY)

DIAGRAM

INDICATE NORTH

☐ 1-TWO-WAY, NOT DIVIDED
2-TWO-WAY, DIVIDED, UNPROTECTED MEDIAN
3-TWO-WAY, DIVIDED, PROTECTED BARRIER
4-ONE WAY
9-UNKNOWN

FACTORS AND CONDITIONS LISTED ARE THE INVESTIGATOR'S OPINION

UNIT #	FACTORS/CONDITIONS CONTRIBUTING			OTHER FACTORS/CONDITIONS MAY OR MAY NOT HAVE CONTRIBUTED			VEHICLE DEFECTS CONTRIBUTING		VEHICLE DEFECTS MAY HAVE CONTRIBUTED	
	1	2	3	1	2	3	1	2	1	2
	1	2	3	1	2	3	1	2	1	2

1-ANIMAL ON ROAD - DOMESTIC
2-ANIMAL ON ROAD - WILD
3-BACKED WITHOUT SAFETY
4-CHANGED LANE WHEN UNSAFE
5-13-SEE VEHICLE DEFECTS
14-DISABLED IN TRAFFIC LANE
15-DISREGARD STOP AND GO SIGNAL
16-DISREGARD STOP SIGN OR LIGHT
17-DISREGARD TURN MARKS AT INTERSECTION
18-DISREGARD WARNING SIGN AT CONSTRUCTION
19-DISTRACTION IN VEHICLE
20-DRIVER INATTENTION
21-DROVE WITHOUT HEADLIGHTS
22-FAILED TO CONTROL SPEED
23-FAILED TO DRIVE IN SINGLE LANE
24-FAILED TO GIVE HALF OF ROADWAY
25-FAILED TO HEED WARNING SIGN
26-FAILED TO PASS TO LEFT SAFELY
27-FAILED TO PASS TO RIGHT SAFELY
28-FAILED TO GIVE SIGNAL OR WRONG SIGNAL
29-FAILED TO STOP AT PROPER PLACE
30-FAILED TO STOP FOR SCHOOL BUS
31-FAILED TO STOP FOR TRAIN
32-FAILED TO YIELD ROW - EMERGENCY VEHICLE
33-FAILED TO YEILD ROW - OPEN INTERSECTION
34-FAILED TO YIELD ROW - PRIVATE DRIVE
35-FAILED TO YIELD ROW - STOP SIGN
36-FAILED TO YIELD ROW - TO PEDESTRIAN
37-FAILED TO YIELD ROW - TURNING LEFT
38-FAILED TO YIELD ROW - TURN ON RED
39-FAILED TO YIELD ROW - YIELD SIGN
40-FATIGUED OR ASLEEP
41-FAULTY EVASIVE ACTION
42-FIRE IN VEHICLE
43-FLEEING OR EVADING POLICE
44-FOLLOWED TOO CLOSELY
45-HAD BEEN DRINKING
46-HANDICAPPED DRIVER (EXP. IN NARRATIVE)
47-ILL (EXP. IN NARRATIVE)
48-IMPAIRED VISIBILITY (EXP. IN NARRATIVE)
49-IMPROPER START FROM PARKED POSITION
50-LOAD NOT SECURED
51-OPENED DOOR INTO TRAFFIC LANE
52-OVERSIZE VEHICLE OR LOAD
53-OVERTAKE AND PASS INSUFFICIENT CLEARANCE
54-PARKED AND FAILED TO SET BRAKES
55-PARKED IN TRAFFIC LANE
56-PARKED WITHOUT LIGHTS
57-PASSED IN NO PASSING ZONE
58-PASSED ON RIGHT SHOULDER
59-PED/PEDAL MOT. CON. FTYROW TO VEHICLE
60-SPEEDING-UNSAFE (UNDER LIMIT)
61-SPEEDING OVER LIMIT
62-TAKING MEDICATION (EXP. IN NARRATIVE)
63-TURNED IMPROPERLY - CUT CORNER ON LEFT
64-TURNED IMPROPERLY - WIDE RIGHT
65-TURNED IMPROPERLY - WRONG LANE
66-TURNED WHEN UNSAFE
67-UNDER INFLUENCE - ALCOHOL
68-UNDER INFLUENCE - DRUG
69-WRONG SIDE APPROACH OR IN INTERSECTION
70-WRONG SIDE-NOT PASSING
71-WRONG WAY - ONE WAY ROAD
72-CELL/MOBILE PHONE USE
73-ROAD RAGE
74-OTHER FACTOR (WRITE ON LINE)

VEHICLE DEFECTS
5-DEFECTIVE OR NO HEADLAMPS
6-DEFECTIVE OR NO STOP LAMPS
7-DEFECTIVE OR NO TAIL LAMPS
8-DEFECTIVE OR NO TURN SIG. LAMPS
9-DEFECTIVE OR NO TRAILER BRAKES
10-DEFECTIVE OR NO VEHICLE BRAKES
11-DEFECTIVE OR NO STEERING MECH
12-DEFECTIVE OR SLICK TIRES
13-DEFECTIVE TRAILER HITCH

TRAFFIC CONTROL — 11
1-NONE
2-INOPERATIVE
3-OFFICER
4-FLAGMAN
5-SIGNAL LIGHT
6-FLASHING RED LIGHT
7-FLASHING YELLOW LIGHT
8-STOP SIGN
9-YIELD SIGN
10-WARNING SIGN
11-CENTER STRIPE/DIVIDER
12-NO PASSING ZONE
13-RR GATE/SIGNAL
14-SCHOOL ZONE
15-CROSSWALK
16-BIKE LANE
17-OTHER

ROADWAY RELATION — 1
1-ON ROADWAY
2-OFF ROADWAY
3-SHOULDER
4-MEDIAN

PART OF ROADWAY — 1
1-MAIN LANE
2-SERVICE ROAD
3-ENTRANCE RAMP
4-EXIT RAMP
5-CONNECTOR
6-DETOUR
7-OTHER

ROADWAY ALIGNMENT — 3
1-STRAIGHT, LEVEL
2-STRAIGHT, GRADE
3-STRAIGHT, HILLCREST
4-CURVE, LEVEL
5-CURVE, GRADE
6-CURVE, HILLCREST
7-OTHER
8-UNKNOWN

LIGHT CONDITION — 1
1-DAYLIGHT
2-DARK, NOT LIGHTED
3-DARK, LIGHTED
4-DARK, UNK LIGHTED
5-DAWN
6-DUSK
8-OTHER
9-UNKNOWN

TYPE OF ROAD SURFACE — 2
1-CONCRETE
2-BLACKTOP
3-BRICK
4-GRAVEL
5-DIRT
6-OTHER
7-UNKNOWN

WEATHER — 1
1-CLEAR/CLOUDY
2-RAIN
3-SLEET/HAIL
4-SNOW
5-FOG
6-BLOWING SAND/SNOW
7-SEVERE CROSSWINDS
8-OTHER
9-UNKNOWN

SURFACE CONDITION — 1
1-DRY
2-WET
3-STANDING WATER
4-SNOW
5-SLUSH
6-ICE
7-SAND, MUD, DIRT
8-OTHER
9-UNK

Commercial Motor Vehicle Enforcement Supplement to the Texas Peace Officer's Crash Report

Form CR-3C
(Rev. 06/08)
Page 1 of 2

Questions? Call: 512/486-5780

☒ 10,001 LBS OR MORE ☐ HAZARDOUS MATERIAL ☒ 9 OR MORE PASSENGER CAPACITY (DRIVER INCLUDED)

CRASH INFORMATION

LOC # 09-076903
ORI # _____
TxDOT # _____

1. COUNTY TARRANT 2. CITY OR TOWN FORT WORTH

3. ROAD ON WHICH CRASH OCCURRED 2350 (BLOCK #) NE LOOP 820 (STREET OR ROAD NAME) _____ (ROUTE #)

4. DATE OF CRASH 07/10/2009 5. HOUR 5:35 ☐ AM ☒ PM

ROADWAY ACCESS: 1 (1-FULL ACCESS CONTROL, 2-PARTIAL ACCESS CONTROL, 3-NO ACCESS CONTROL)

DRIVER INFORMATION

6. NAME WARE,RONNIE 7. DRIVER'S LICENSE CLASS 2 (1-A, 2-B, 3-C, 4-M, 5-UNK, 6-AM, 7-BM, 8-CM)

CARRIER INFORMATION

8. VEHICLE OPERATION ☐ INTERSTATE COMMERCE ☐ INTRASTATE COMMERCE ☐ NOT IN COMMERCE ☒ GOVERNMENT ☐ PERSONAL

9. CARRIER'S CORPORATE NAME FORT WORTH TRANSIT AUTHORITY

10. CARRIER'S PRIMARY ADDRESS 1600 (NUMBER) E LANCASTER (STREET) FT WORTH (CITY) TX (STATE) 76102 (ZIP)

11. CARRIER ID TYPE ☐ ICC ☐ US DOT ☐ TxDOT ☐ OTHER ☐ NONE 12. CARRIER ID NUMBER _____

MOTOR VEHICLE INFORMATION

13. UNIT NUMBER ON CR-3 1 14. LICENSE PLATE EXM[illegible] (YEAR) TX (STATE) 869182 (NUMBER)

15. GROSS VEHICLE WEIGHT RATING (GVWR) ☐
REGISTERED GROSS VEHICLE WEIGHT (RGVW) ☒ 26000

16. VEHICLE TYPE

3

1-PASSENGER CAR (ONLY IF VEHICLE DISPLAYS HM PLACARDS)
2-LIGHT TRUCK (ONLY IF VEHICLE DISPLAYS HM PLACARDS)
3-BUS (SEATS FOR 9-15 PEOPLE, INCLUDING DRIVER)
4-BUS (SEATS FOR > 15 PEOPLE, INCLUDING DRIVER)
5-SINGLE UNIT TRUCK (2 AXLES, 6 TIRES)
6-SINGLE UNIT TRUCK (3 OR MORE AXLES)
7-TRUCK TRAILER
8-TRUCK TRACTOR (BOB TAIL)
9-TRACTOR/SEMITRAILER
10-TRACTOR/DOUBLE TRAILER
11-TRACTOR/TRIPLE TRAILER
99-UNKNOWN HEAVY TRUCK OVER 10,000 LBS (CANNOT CLASSIFY)

17. CARGO BODY STYLE

1

1-BUS (SEATS FOR 9-15 PEOPLE, INCLUDING DRIVER)
2-BUS (SEATS FOR > 15 PEOPLE, INCLUDING DRIVER)
3-VAN/ENCLOSED BOX
4-CARGO TANK
5-FLATBED
6-DUMP
7-CONCRETE MIXER
8-AUTO TRANSPORTER
9-GARBAGE/REFUSE
10-GRAIN, CHIPS, GRAVEL
11-POLE
12-NOT APPLICABLE
98-OTHER _____

18. HAZARDOUS MATERIAL

TRANSPORTING PLACARDABLE HAZARDOUS MATERIAL ☐ YES ☒ NO
1 DIGIT CLASS # ☐ 4 DIGIT ID # ☐☐☐☐

HAZARDOUS MATERIALS RELEASED OR SPILLED ☐ YES ☐ NO (DO NOT INCLUDE FUEL FROM THE VEHICLE FUEL TANK)
1 DIGIT CLASS # ☐ 4 DIGIT ID # ☐☐☐☐

TRAILER NUMBER 1 INFORMATION

19. LICENSE PLATE _____ (YEAR) _____ (STATE) _____ (NUMBER)

20. GROSS VEHICLE WEIGHT RATING (GVWR) ☐
REGISTERED GROSS VEHICLE WEIGHT (RGVW) ☐ _____

TRAILER TYPE ☐ (1-FULL TRAILER, 2-SEMI TRAILER, 3-POLE TRAILER)

TRAILER NUMBER 2 INFORMATION

21. LICENSE PLATE _____ (YEAR) _____ (STATE) _____ (NUMBER)

22. GROSS VEHICLE WEIGHT RATING (GVWR) ☐
REGISTERED GROSS VEHICLE WEIGHT (RGVW) ☐ _____

TRAILER TYPE ☐ (1-FULL TRAILER, 2-SEMI TRAILER, 3-POLE TRAILER)

23. SEQUENCE OF EVENTS - UNIT 1

SEQ 1	SEQ 2	SEQ 3	SEQ 4
13			

1-NONCOLLISION RAN OFF ROAD
2-NONCOLLISION JACKKNIFE
3-NONCOLLISION OVERTURN (ROLLOVER)
4-NONCOLLISION DOWNHILL RUNAWAY
5-NONCOLLISION CARGO LOSS OR SHIFT
6-NONCOLLISION EXPLOSION OR FIRE
7-NONCOLLISION SEPARATION OF UNITS
8-NONCOLLISION CROSS MEDIAN/CENTERLINE
9-NONCOLLISION EQUIPMENT FAILURE
10-NONCOLLISION OTHER
11-NONCOLLISION UNKNOWN
12-COLLISION INVOLVING PEDESTRIAN
13-COLLISION INVOLVING MOTOR VEHICLE IN TRANSPORT
14-COLLISION INVOLVING PARKED MOTOR VEHICLE
15-COLLISION INVOLVING TRAIN
16-COLLISION INVOLVING PEDALCYCLE
17-COLLISION INVOLVING ANIMAL
18-COLLISION INVOLVING FIXED OBJECT
19-COLLISION WITH WORK ZONE MAINTENANCE EQUIPMENT
20-COLLISION WITH OTHER MOVABLE OBJECT
21-COLLISION WITH UNKNOWN MOVABLE OBJECT
98-OTHER _____

24. TOTAL NUMBER OF AXLES 2

25. TOTAL NUMBER OF TIRES 4

26. OFFICER'S PRINTED NAME DETECTIVE TDP DAVIS 1965 **DEPT.** FT WORTH PD **DATE** 07/11/2009

GENERAL

A separate commercial supplement is to be completed on **each** commercial motor vehicle involved in a motor vehicle crash. This supplement(s) must be attached to the basic peace officer 's crash report. A commercial motor vehicle for supplemental reporting is defined as:

1. Any motor vehicle or towed vehicle with a Gross Vehicle Weight Rating (GVWR) or a Registered Gross Vehicle Weight (RGVW), whichever is greater, of 10,001 lbs. or more, or any combination of vehicles where the Gross Combined Weight Rating (GCWR) or the total RGVW of the combination is 10,001 lbs. or more.
   - 1.1 GVWR and RGVW are both defined as the weight of the fully equipped vehicle plus its net carrying capacity. The GCWR is the combined weight rating of a motor vehicle and a towed unit(s). On occasion, the GVWR and the RGVW will differ. In those situations, the greater weight value will be used to determine if this form must be completed.
   - 1.2 The GVWR of a motor vehicle normally can be found on an information plate on the driver's door or door post. The GVWR of a trailer normally can be found on an information plate near the front left portion of the trailer. If the vehicle does not have an information plate or it is illegible, use RGVW. For combination or token trailers, see 1.6 below.
   - 1.3 On vehicles registered in Texas, the RGVW is shown on the registration receipt under "gross weight." Commercial motor vehicles are required to carry the registration receipt.
   - 1.4 In the event the registration receipt is not available, RGVW can normally be obtained by a **complete** registration check. Exception: If the vehicle has exempt license plates (i.e. owned by a government entity) no RGVW will be shown. In those instances, GVWR must be used.
   - 1.5 If GVWR is used to determine the need to complete this supplement, GVWR for the motor vehicle and each trailer(s) must be obtained and shown in the appropriate blank(s).
   - 1.6 If RGVW is used to determine the need to complete this supplement, the RGVW should be obtained for each motor vehicle and trailer in the combination unless the combination is registered as a **combination/token** vehicle or as an **apportioned** vehicle. In those situations the license plates will indicate combination/token or apportioned. If the vehicle is registered as a combination/token or apportioned vehicle, the entire registered gross weight will be shown on the power unit and the trailer will not carry a RGVW. In those instances, show the RGVW of the combination in the power unit and show zero (0) on the trailer(s).
   - 1.7 RGVW for out-of-state vehicles and trailer(s) may be obtained from registration receipts issued by the licensing state, temporary permits, cab cards or other documents or as in 1.4 above.

2. Any bus, which shall include every motor vehicle with a seating capacity of nine (9) or more passengers **(including the driver)** and used for the transportation of persons. The seating capacity of a bus (excluding school buses) shall be determined by allowing one (1) passenger for each sixteen (16) inches of seat space. The seating capacity of a school bus shall be determined by allowing one (1) passenger for each thirteen (13) inches of seat space.

3. Any motor vehicle hauling hazardous materials which is required to be placarded under the Hazardous Materials Transportation Act.

INSTRUCTIONS FOR COMPLETION OF FORM CR-3C

Detailed instructions for completion of this supplement are included in the Instructions to Police for Reporting Crashes.

Check Boxes (Top of Report)
Check appropriate box indicating if the vehicle was over 10,001 pounds, Hazardous Material(s), or 9 or more passenger capacity (driver included). More than one box may be checked.

Roadway Access - Code the access control characteristics which best describes the roadway which the vehicle was traveling on at the time of the crash. Full Access Control is an expressway or freeway where the only means of entry to or exit from the roadway is by ramps connecting to other streets or highways. No Access Control is a street or highway where driveways provide access to and egress from adjacent properties and where cross streets intersect at a grade. Partial Access Control is a street or highway which does not clearly fit the above definitions.

CRASH INFORMATION (Items 1-5)
Complete the information in this section exactly as shown on the basic report (CR-3).

DRIVER INFORMATION (Items 6-7)
Complete items 6 and 7 exactly as shown on the basic report (CR-3).

CARRIER INFORMATION (Items 8-12)
Indicate whether the operation of the commercial motor vehicle at the time of this crash is defined as an interstate, intrastate, government or personal operation. An interstate operation is one where the transportation of the property originated in one state or country and passed through or terminated in another state or country. An intrastate operation is one where the transportation of the property did not cross a state or international boundary. The bill of lading origin and destination information may be one source available to make this determination. Government and Personal use will be determined through investigation. Indicate the Carrier 's corporate name and primary business address in items 9 and 10. The Carrier is defined as the entity responsible for the operation of the vehicle at the time of the crash. This may be the actual owner of the vehicle or the lessee. The information should match Owner/Lessee shown on the CR-3. Show the type of carrier identification by checking the appropriate box in item 11. Show the ID number in item 12, if applicable.

MOTOR VEHICLE INFORMATION (Items 13-18)
Enter the unit number from the CR-3 for this motor vehicle in item 13. Show the registration year, state and number in item 14. Enter the GVWR and RGVW as applicable in item 15. Indicate which, GVWR or RGVW, by checking the appropriate box.
Indicate the appropriate number in the box for Vehicle Type in item 16.
Indicate the appropriate number in the box for Cargo Body Style in item 17.
Indicate by checking the appropriate box in item 18 whether this vehicle is hauling hazardous material(s). If yes, enter the class and ID numbers of the hazardous material(s) being transported. Indicate by checking the appropriate box whether hazardous materials were released (spilled, discharged, etc.) The class and ID numbers should be obtained from the bill of lading or shipping papers. If unavailable, the class and ID numbers may be taken from the placard. The class may be located in the lower corner of the diamond shaped placard. The ID numbers may be located on the placard or on an orange label near the placard. (REFER TO DETAILED INSTRUCTIONS.)

TRAILER NUMBER 1 & 2 INFORMATION (Item 19-22)
If the commercial motor vehicle reported on this supplement is towing one trailer, complete trailer number 1 section only. If towing 2 trailers, complete both trailer number 1 and 2 sections.
Indicate the registration year, state, and number in item 19, and if applicable item 21. Show the GVWR or RGVW in item 20 and, if applicable, item 22.
Indicate which, GVWR or RGVW by checking the appropriate box.
Indicate the appropriate number in the box for Trailer Type (item 20, and if applicable, item 22).

Indicate Sequence of Events (Item 23). Indicate the order and type of crash events which occurred involving this vehicle.
Indicate the Total Number of Axles (Item 24). Indicate the total number of axles on the motor vehicle.
Indicate the Total Number of Tires (Item 25). Indicate the total number of tires on the motor vehicle.
The person completing this supplement should print name, show department and the date this supplement was prepared in item 26.

Case No.: 09076903

Address1: 2350 NE Loop 820 E/B

County: Tarrant

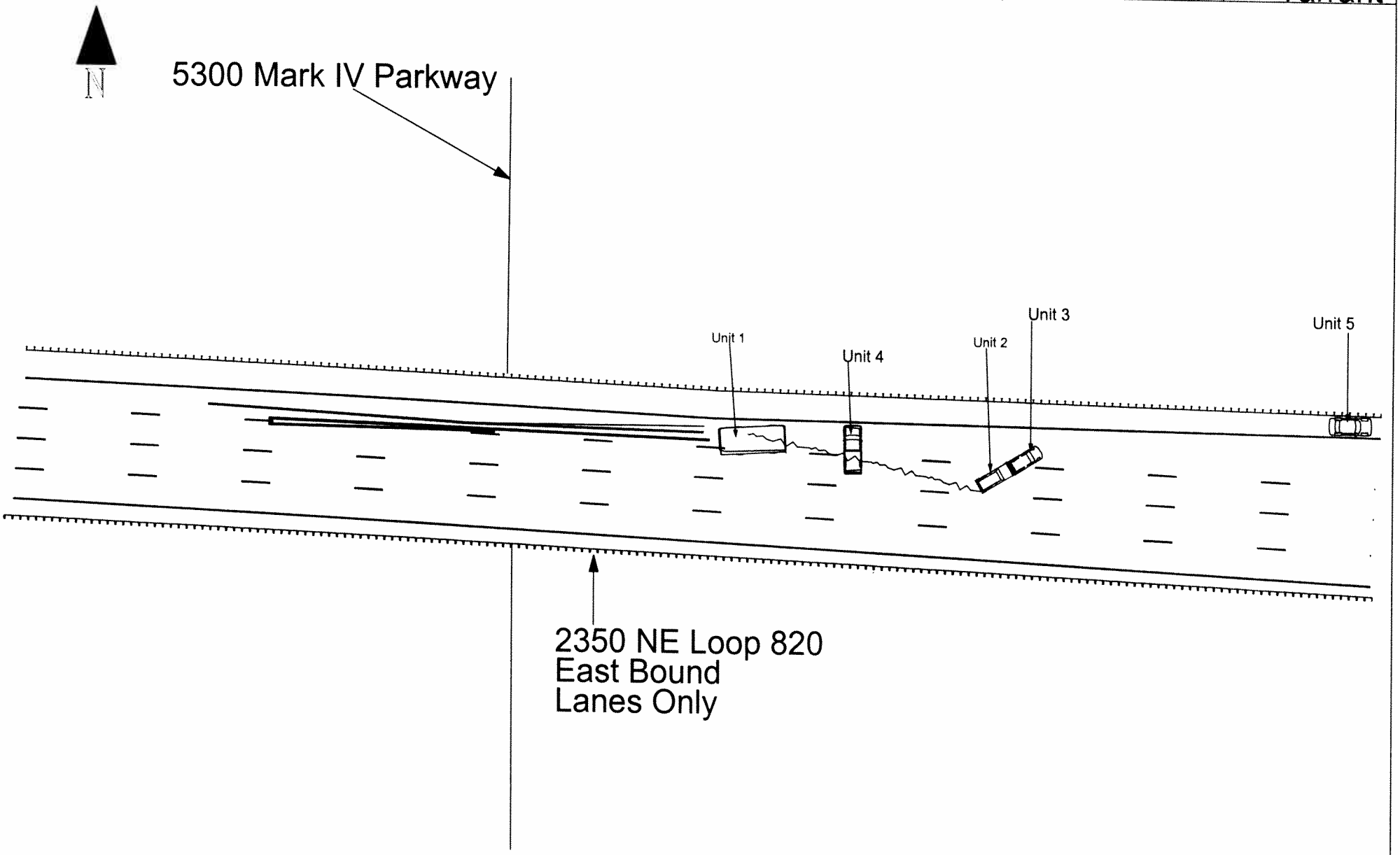

Officer: Detective TDP Davis 1965 FWPD

Date: 071009

Time: 5:35 pm

Attachment H
Letter to Senator Richard Durbin from Chrysler

CHRYSLER

August 27, 2009

John T Bozzella

The Honorable Richard Durbin
United States Senate
Washington, DC 20510

Dear Senator Durbin:

We very much appreciate the support you have given to the new Chrysler Group LLC, and we understand the concerns you have raised about Chrysler Group's commitments on product liability claims.

As you know, on June 10, 2009, Chrysler Group purchased substantially all of the assets of the former Chrysler LLC (now known as "Old Carco LLC"). As part of the bankruptcy court-approved sale transaction, Chrysler Group assumed product liability claims relating solely to vehicles sold by Chrysler Group to its dealers. Chrysler Group did not assume product liability claims arising out of vehicles sold before June 10, 2009 (except to the extent required by our sales and service agreements with sustained dealers).

Today, Chrysler Group has a much better appreciation of the viability of our business than it did on June 10. As a result, we will announce today that the company will accept product liability claims on vehicles manufactured by Old Carco before June 10 that are involved in accidents on or after that date. This is in addition to our previous commitment to honor warranty claims, lemon law claims and safety recalls regarding these vehicles. As a result of today's announcement, Chrysler Group's approach is consistent with that taken by General Motors as part of its bankruptcy process.

While Chrysler Group still faces challenges, we are confident today that the future viability of the company will not be threatened if we assume these obligations. We want our customers to feel comfortable and confident buying, driving and enjoying one of our vehicles. Chrysler Group vehicles meet or exceed all applicable federal safety standards and have excellent safety records.

We appreciate your dedication to exploring this issue with us through hearings and conversations with our key executives. We hope this decision alleviates your concerns and assures you that we stand behind our products, our customers and our dealers.

Sincerely,

Cc: Chairman Patrick Leahy
Senator Arlen Specter
Senator Herb Kohl

ATTACHMENT H

EXPERT WITNESS REPORT - 2 January 2012 REVISION

Kline v. Loman Auto Group, Victoria Morgan-Alcala, et al.

Page Range 8

Pages 319 - 326

EXPERT WITNESS REPORT - SECOND REVISION

Kline v. Loman Auto Group, Victoria Morgan-Alcala, et al.

MEMO ONE:

In his "Amended Technical Report" of 24 March 2011, Mr. Robert Banta blatantly misquotes my paragraph 7-b. He inserted the following phrase inside quotation marks, leading the reader to believe that I made its assertion:

"(not at issue in this case)"

As the Honorable Court can see, I made no such assertion. I make no such assertion. Banta's claim that I did so is unqualified in his report. Regarding 7-b he also misleads by stating:

"This statement demonstrates a complete lack of knowledge of the issue at hand. The WJ had entirely new frame rails with all new floorpan structures. Not one part was carried over from the previous model year."

Indeed, it is Mr. Banta that has "demonstrate(d) a completes lack of knowledge of the issue at hand." The simple issue is the fuel system crashworthiness of the ZJ and WJ vehicles at the fundamental level that results from having "a fuel tank behind the rear axle, below the rear bumper, and without adequate shielding/protection from foreseeable real-world rear under-ride collisions" (Please see my paragraphs 6-b and 7-c). No aspect of the revisions to the rear structure of the 1999 WJ-Body Jeep Grand Cherokee occurred in a specific engineering program to correct case-relevant fuel system crashworthiness and/or structural defects. Banta is probably fully-aware of this rudimentary fact.

Banta is presumably fully-aware that the change to the left-side frame rail on the 1999 WJ-Body only served to exasperate the notorious safety defects relating to the 1993 through 1998 ZJ-Body fuel tank filler hose thru-the-frame routing. Further:

i. As demonstration of defect exasperation, the CAS commissioned a series of FMVSS-301 rear crash tests at KARCO Engineering, LLC (California) and FHWA (Virginia) during 2010. In separate ZJ and WJ crash tests, total catastrophic failure of the fuel tank/filler hose was documented. Again, rear crashworthiness of the ZJ/WJ is thee "issue at hand," not the minor revisions and part number changes alluded to by Banta and Chrysler counsel **(Attachment L)**.

ii. As Mr. Banta and Chrysler counsel is fully-aware, in July 2009 a WJ-Body (2004 Jeep Grand Cherokee) burst into flames during a real-world rear end collision on a highway in Fort Worth, Texas. Completely consistent with the Kline case, with

MEMO ONE con't:

> multiple vehicles and vehicle impacts were involved, the only death victim of the accident was the driver of the WJ-Body, who burned to death due to the fact that, in contrast to this misleading statement, "the 1999 WJ-Body did not involve major revisions to case-relevant structural or overall vehicle layout/configuration."

MEMO TWO:

Regarding my paragraphs 6-b and 7-c, Mr. Banta's "Amended Technical Report" of 24 March 2011 claims:

"This compound and complex statement is simply incorrect. General Motors produced Blazer sport utilities with behind the rear axle fuel tanks at this time…"

Mr. Banta has admitted in his case report, he is not qualified (by education/experience) for, and never had any experience with the following automotive professional roles: Product Planning, Engineering Programs Management, engineering Design Release responsibility or experience, engineering Development Release responsibility or experience, MOPAR or racing/aftermarket programs, Dealer Relations, Supplier Relations, marketing/sales planning, etc.

As **Attachment M** shows, Mr. Banta never worked at the Jeep and Dodge Truck Engineering (JTE) organization. In truth, he has never had any product or engineering level responsibility for any Chrysler automotive product.

During the four years that I was responsible for Jeep and Dodge truck engineering programs, Mr. Banta was never present, was not invited to attend, was not qualified to attend/participate, nor did he formally receive any of my or JTE staff product engineering memos, meeting minutes, workload assignments/duties, etc. that relate in any way to the planning, engineering, manufacturing or marketing/sales of Jeep or Dodge truck products. As Mr. Banta states, he worked in an office that has a location/pay and organization codes that are assigned to the General Counsel's office. Although touted as "Product Analysis," the group wherein Mr. Banta spent his career, is part of the internal Chrysler office of General Counsel which has never had any responsibility whatsoever with the planning, engineering, manufacturing or marketing/sales of any Chrysler automotive, Jeep or Dodge truck product. Although the group name purposely

MEMO TWO con't:

seeks to lead the unaware/uninformed to another conclusion, the Product Analysis group is a legal group comprised of lawyers; not engineers or product planning executives, etc.

In this context, and others, Banta's misleading and uninformed report wording was anticipated. Specifically, Banta misleads with that statement inasmuch as he blatantly fails to qualify for the Honorable Court which "Blazer" he is attempting to use as a rebuttal to my paragraphs 6-b and 7-c. I address his lack of precision here:

i. Use of the term 'competitive' in my original and revised paragraphs 6-b and 7-c is precise. General Motors (GM) had and continues to produce/market a "Blazer," but in four versions: Full size two and four-door (later renamed Tahoe), and mid size two-door and four-door versions.

ii. The ZJ/WJ versions of the Jeep Grand Cherokee are mid-size sport utility vehicles (SUV) and, as such, did not and do not compete with full size versions of any sport utility vehicle. The full size Dodge Ramcharger SUV was the vehicle marketed by Chrysler to compete with the full size GM "Blazer" entries, designated by GM as C/K-Body. (The Ramcharger was later replaced by the Dodge Durango which was larger than the ZJ/WJ in nearly every dimension.)

iii. The ZJ/WJ versions of the Jeep Grand Cherokee are mid-size SUVs and, as such, competed with the other mid size SUVs. However, and precisely, the ZJ/WJ versions of the Jeep Grand Cherokee do not compete with the two-door mid-size GM Chevy Blazer (coded S-10). A major detail that Mr. Banta fails to report is that the ZJ/WJ Jeep Grand Cherokee is available only in four-door versions and, as such, were/are marketed to compete with the four-door version of the S-10 Chevy Blazer. But the most egregious and misleading portion of Mr. Banta's report on this point is the fact that the four-door version of the S-10 Chevy Blazer does NOT have a fuel tank that is located "behind the rear axle, below the rear bumper, and without adequate shielding/protection from foreseeable real-world rear under-ride collisions." It is well-known that the four-door version of the S-10 Chevy Blazer has a fuel tank that is located in the middle of the vehicle and protected inside substantial steel/structural frame rails. Again, this is thee "issue at hand."

iv. Banta uses the December 2007 report of ExPonent which, in addition to being discredited, portrays the two-door S-10 GMC Jimmy and Oldsmobile Bravada as direct competitors to the ZJ-Body; this is false. ExPonent coyly lists the S-10 GMC Jimmy and Oldsmobile Bravada as having fuel tanks in the "Aft Axle" location. At the time this report was issued its author was aware that the four-door vehicles have a fuel tank located in the middle of the vehicle and protected by substantial steel/structural frame rails.

MEMO TWO con't:

v. The anticipated argument by Mr. Banta/defendants that the ZJ/WJ versions of the Jeep Grand Cherokee compete with the two-door version of the S-10 Chevy Blazer should be further qualified. Although not mentioned by Banta, it is well-known that the smaller XJ-Body Jeep Cherokee (non Grand) does come in a two-door version and was marketed to compete with the two-door S-10 "Blazer." Both of these vehicles (XJ and S-10 two-door) have fuel tanks that are located "behind the rear axle." However, Mr. Banta also fails to mention that mere weeks prior to the 24 March 2011 submission of his "Amended Technical Report" an XJ-Body Jeep Cherokee was in a foreseeable rear collision accident in Raleigh-Durham, North Carolina. On 1 March 2011, a three car accident occurred. Once again, with facts very similar to the Kline accident, the only victims of serious life-threatening injury were those in the Jeep vehicle. Like the Kline accident, all other accident participants escaped with only minor injuries. The driver of the Jeep Cherokee, which competes with the two-door version of the S-10 Blazer, incurred TBD burns, but the Jeep vehicle was totally destroyed by the ensuing fireball. I have added the ABC News report video as dvd **Attachment N**, and also available for viewing here:

http://www.youtube.com/watch?v=zTdm_wj4AlY&feature=relmfu

v. A vehicle that also was not mentioned by Mr. Banta, and did/does not compete with the ZJ/WJ versions of the Jeep Grand Cherokee, is the Suzuki XL-7 small-size SUV. The XL-7 has a fuel tank located behind the rear axle and (slightly) below the rear bumper (similar to the Jeep Cherokee XJ). However, the XL-7 does not utilize a thin sheet metal for its fuel tank. Not only does the XL-7 use a heavy gauge TBD plate for tank construction, it also deploys a factory installed ~ 3/16" steel plate which nearly encapsulates the tank, similar to a skid plate, offering protection from the well-known rear under-ride collision. Please also note that Photo 8 of 9 shows an over-the-frame rail filler tube routing **(Attachment O)**.

At best, Mr. Banta's rebuttal regarding the "Blazer" lacks precision. Also, his discussion about SUV designs from the pre-Pinto 1970's era has no relevance whatsoever.

MEMO THREE:

On page 5, paragraph VIII, Mr. Banta claims:

"This writer has been involved in the investigation of numerous collision related fires cases . . ."

MEMO THREE con't :

This statement is understood to mean that this expert has been involved in numerous Jeep Cherokee and Jeep Grand Cherokee collision related fires cases which have fuel tanks that are located "behind the rear axle, below the rear bumper, and without adequate shielding/protection from foreseeable real-world rear under-ride collisions." Mr. Banta continues:

". . . and has observed many cases where the vehicle was equipped with a skid plate or a trailer hitch or both . . ."

However, the Honorable Court should note that Mr. Banta fails to declare the accident outcome of these alleged "fires cases," which vehicles he is referring to and, most importantly, if the alleged "collision related fire cases" were real-world rear collisions of the type that killed Susan Kline. We are not discussing in this litigation the issue of fuel-fed fires in frontal collisions that involve vehicles that just-happened to have a skid plate mounted on the rear. These broad generalizations should be fully scrutinized by the Honorable Court. Mr. Banta continues:

" . . . There has been no definitive study or research that has ever identified a skid plate or a trailer hitch as a fuel leakage mitigation device."

This claim is absurd on too many levels to review here, but let me correct the record with use of two blatant examples. Example #1 has already become part of the Kline case record, was already discussed in my 'Expert Report – Preliminary' of 30 November 2009, and has already been testified to by me while under oath in court in this case with no rebuttal witnesses presented by the defendants. In their secret recall entitled, *"Safety Recall No. A10 – Fuel Tank Blocker Bracket,"* Daimler-Chrysler openly states:

"Those (Jeep Grand Cherokee) vehicles that have already been repaired by having a skid plate installed do NOT require any additional service."

In other words, as Mr. Banta is fully-aware, thee central issue of this secret recall was the fact that a skid plate was seen by an internal Chrysler *"study or research"* to act as a *"fuel leakage mitigation device."* Mr. Banta is also aware that skid plates are now the main theme of the 2011 WL-Body Jeep Grand Cherokee advertising campaign wherein impact protection of underbody components, such as fuel tanks, is vigorously marketed to the public. I have attached this Jeep Grand Cherokee advertisement as dvd **Attachment P**, and made available for viewing here:

http://www.youtube.com/watch?v=Qs6S9p73VUo&feature=

MEMO THREE con't :

Example #2 involves a well-known Chrysler document called the "Baker Memo." This memo was included in my submission to Mr. Clarence Ditlow, Director at the Washington-based Center for Auto Safety (CAS). The format of this submission took form after I had lengthy one-on-one individual discussions with Senator John Rockefeller (D-WV) and Mr. David L. Strickland, Administrator of the National Highway Traffic and Safety Administration (NHTSA). Dated 1 June 2010, this submission was also forwarded to NHTSA. It was the first I had made to the NHTSA Defect Petition 09-005. Discussed in-detail, and of great interest to Mr. Strickland, I attached the 1978 Baker memo, which states under the section for trucks:

> "Chrysler is investigating fuel tank relocation ahead of the rear wheels for vans and multipurpose vehicles, but present plans for pickups through 1983 and for MPV's and vans through 1985 have the fuel tank located behind the rear wheels. In vehicles both with and without bumpers there is a concern with vertical height differences that create a mismatch with passenger car bumpers. Where fuel tank location behind the rear axle is all that is feasible, **a protective impact deflection structure may have to be provided** whether or not a bumper is provided. An investigation whether to relocate the fuel tank or to provide impact deflecting structures is presently underway." (bolding added)

As I state in my 1Jun10 letter to Mr. Ditlow (Attachment I), the phrase "protective impact deflection structure" is construed to be any structural element or vehicle add-on that protects against direct collisions such as that experienced in the Kline death accident. Or to borrow from Banta's verbiage, any structural element or add-on that acts as a *"fuel leakage mitigation device."*

In other words, and of great interest to Mr. Strickland, this 1978 r memo" reveals that Chrysler engineers have known since at least 1978, during the era that NHTSA was investigating the notorious Ford Pinto and GM C/K truck fuel system fire death defects, that an "impact deflection structure" (i.e. skid plate) will function as a *"fuel leakage mitigation device."* This "Baker memo" was widely forwarded to the JTE organization, and was part of my original Dodge Truck Operations file, prior to formation of JTE which occurred after the acquisition of American Motors by Chrysler Corporation in July1987 (Please see MEMO TWO above).

Further, although not manifest in the 1993-1998 ZJ-Body or 1999-2004 WJ-Body versions of the Jeep Grand Cherokee, the "Baker memo" did influence the decision to relocate/redesign all Dodge truck fuel tank systems **(Attachment Q)**.

MEMO FOUR:

On page 6, paragraph VIII, Mr. Banta makes claims under the section entitled "Impact Severity" in an attempt to rebut fellow plaintiff expert Neil Hannemann. Mr. Banta states:

"Hannemann notes that it is 'recognized and excerpted that an impact of a magnitude to cause a fire should also be severe enough to cause life threatening orthopedic injuries.'

While this is a desirable goal, it is not recognized and accepted to my knowledge, nor is it the subject of any learned treatise, published study or recognized authority that I am aware of."

As just one example, unlike Mr. Hannemann, Mr. Banta needs to review the fundamental technical underpinnings of NHTSA safety regulation FMVSS-214.

MEMO FIVE:

On page 8, Mr. Banta claims:

"O&C-2. This entire section is untrue. There is no evidence offered that substantiates the allegations made in this section. I was present at both the Vehicle Safety Office and the Product Analysis Department before during and after the time periods referred to herein. And found no occasions where any of these statements actually occurred . . . "

Mr. Banta's over-reaching statement lacks credibility.

It should be noted that in my section entitled O&C-2, I very specifically stated that the forums and contexts of my testimony involve the Jeep and Dodge Truck Engineering organization (JTE). Mr. Banta attempts, rather blatantly, to divert the attention of the Honorable Court to claims about his alleged presence in "*both the Vehicle Safety Office and the Product Analysis Department."* That claim has absolutely no relevance to the issues described in O&C-2. At no time was Mr. Banta or any Vehicle Safety Office personnel present for any of the discussions that I will testify-to in open court. As Mr. Banta and defendants' legal counsel are fully-aware, my report on this matter is very narrow and specific to meetings and forums at my place of employment: JTE. Mr. Banta never worked at JTE, and it is possible he never set-foot in that facility during the relevant time period. Further, my report draft was submitted to plaintiff's counsel long before anyone declared Mr. Banta an expert in this litigation.

MEMO FIVE con't:

We should once again review Mr. Banta's own report content. During the four years that I was responsible for both Jeep and Dodge truck engineering programs, Mr. Banta was never present, was not invited to attend, was not qualified to attend/participate, nor did he formally receive any of my or other JTE staff product engineering memos, meeting minutes, workload assignments, duties, etc. that relate in any way to the planning, engineering, manufacturing or marketing/sales of any Jeep or Dodge truck products. As Mr. Banta states, he worked in an office that has location/pay and organization codes that are assigned to the Chrysler General Counsel's office. Although called "Product Analysis," the group wherein Mr. Banta spent his Chrysler career is an internal law office which has no direct responsibility with the planning, engineering, manufacturing or marketing/sales of any Chrysler automotive, Jeep or Dodge truck product. Although the group name purposely seeks to lead the unaware/uninformed to another conclusion, the Product Analysis group is a legal group that reports to internal lawyers; not to engineering or product planning executives, etc.

It should be specified that the so-called Chrysler "Vehicle Safety Office," which I had extensive experience with during my career at Chrysler, also involves a title that is meant to mislead the uninformed. In truth, the Vehicle Safety Office namesake promotes the assumption that its staff are involved in the design & development of vehicle safety equipment and systems. The Chrysler "Vehicle Safety Office" was not involved-in or responsible for any automotive program engineering, manufacturing or planning. The name belies that fact that the primary role of the Chrysler "Vehicle Safety Office" is government relations and/or regulatory affairs. The majority of its staff are not qualified in technical or engineering subjects.*

Unlike Mr. Banta and defense counsel, it is emphasized that the key person in-attendance, at the meetings/forums that comprise my O&C-2 testimony, was JTE Executive Vice President Mr. Francois J. Castaing. The defendants' have repeatedly, in this litigation and others, failed to cooperate in their discovery responsibilities by producing Mr. Castaing for sworn deposition or trial testimony. (Please see my cover letter of 28 April 2011 originally submitted with Expert Witness Report – First Revision).

* By way of example, during his deposition in the death case of Golden versus Chrysler, while being examined on technical matters, Mr. Ronald Zarowitz of the Chrysler Vehicle Safety Office declared, "I'm not an engineer!" Mr. Zarowitz is a lawyer by training.

ATTACHMENT I

EXPERT WITNESS REPORT - 2 January 2012 REVISION

Kline v. Loman Auto Group, Victoria Morgan-Alcala, et al.

Page Range 32

Pages 328 – 359

FedEx Ground
P.O. Box 108
Pittsburgh, PA 15230-0108

June 7,2010

Dear Customer:

The following is the proof-of-delivery for tracking number **128318100003186**.

Delivery Information:

Status:	Delivered	**Delivery location:**	1825 CONNECTICUT AVE NW STE330 Washington, DC 20009
Signed for by:	JROBINSON	**Delivery date:**	Jun 7, 2010 14:19
Service type:	FedEx Ground-U.S.		

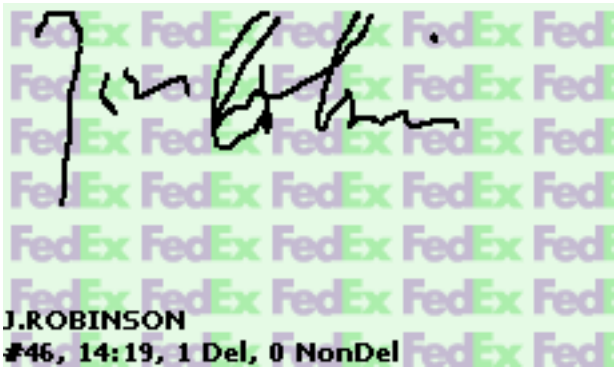

Shipping Information:

Tracking number:	128318100003186	**Ship date:**	Jun 3, 2010
		Weight:	0.7 lbs/0.3 kg

Recipient:
1825 CONNECTICUT AVE NW
STE330
Washington, DC 20009 US

Shipper:
PAUL SHERIDAN
SHERIDAN, PAUL V
22357 COLUMBIA ST
DEARBORN, MI 481243431 US

Thank you for choosing FedEx Ground.

FedEx Worldwide Customer Service
1.800.GoFedEx 1.800.463.3339

To: Mr. Clarence Ditlow, Director *
Center for Auto Safety
Suite 330
1825 Connecticut Ave, NW
Washington, DC 20009-5708
(202) 328-7700

Date: 1 June 2010 VIA EMAIL AND FEDEX 1283181-00003186

From: Mr. Paul V. Sheridan
DDM Consultants
22357 Columbia Street
Dearborn, MI 48124-3431
313-277-5095 / pvs6@Cornell.edu

Subject 1: Jeep Grand Cherokee Defect Petition 09-005 (DP-09-005) File Update

Subject 2: Has Chrysler Group LLC Declared the Bankruptcy Order Void?

Courtesy Copy List

Ms. Angel M. DeFilippo
Grieco Oates & DeFilippo, LLC
414 Eagle Rock Avenue
West Orange, NJ 07052
973-243-2099

Mr. Courtney E. Morgan, Jr.
Morgan & Meyers, PLLC / Suite 320
3200 Greenfield Road
Dearborn, MI 48120
313-961-0130

Mr. David L. Strickland
NHTSA Headquarters/West Building
1200 New Jersey Avenue, SE
Washington, DC 20590
888-327-4236

Honorable Arthur J. Gonzalez, Chief Judge
U.S. Bankruptcy Court for the
Southern District of New York
One Bowling Green
New York, NY 10004-1408
(212) 668-2870

Senator Frank Lautenberg
324 Hart Senate Office Building
District of Columbia 20510-3003
202-224-3224

Senator Carl Levin
269 Russell Senate Office Building
Washington, D.C. 20510-2202
202-224-6221

Ms. Silvia Gambardella
Special Projects Producer- WTVD
411 Liberty Street
Durham, NC 27701
919-687-2219

Mr. Brian S. Malone
Publisher/Editor
Times of Trenton
500 Perry Street
Trenton, N.J. 08605
609-989-5665

* *Available with hyperlinks here:* http://links.veronicachapman.com/Ditlow-Baker-1.pdf

DDM Consultants
22357 Columbia Street
Dearborn, MI 48124-3431
313-277-5095
pvsheridan@comcast.net

1 June 2010

Mr. Clarence Ditlow, Director
Center for Auto Safety - Suite 330
1825 Connecticut Ave, NW
Washington, DC 20009-5708
(202) 328-7700

Subject 1: Jeep Grand Cherokee Defect Petition 09-005 (DP-09-005) File Update
Subject 2: Has Chrysler Group LLC Declared the Bankruptcy Order Void?

Dear Mr. Ditlow:

Review

Previously I had submitted DaimlerChrysler Safety Recall No. A10–Fuel Tank Blocker Bracket [1] as a file update to the subject (Attachment 1). What remains significant about this document is that it represents the first time that three key words were used connectedly and simultaneously with respect to the Jeep Grand Cherokee:

"safety"
"skid plate"
"repaired"

Although the underlying portent is well-understood internally to Chrysler and its dealers, Safety Recall A10 represented the first admission that Grand Cherokee fuel tank safety/crashworthiness issues could be "repaired" by existence or installation of a skid plate. Alternatively, I have not located MOPAR documentation or Chrysler new vehicle sales order guides that promote these three key words simultaneously. MOPAR materials use phraseology such as "recreation" when selling the fuel tank skid plate to the aftermarket. The new vehicle sales brochures/documents for option package "XEE" use similar descriptions. [2]

Again, prior to my discovery/submission of Safety Recall A10 to the lawsuit of Kline v. Chrysler, Lomans, et al., these three key words were never simultaneously offered to the public; either from Chrysler, from Chrysler dealerships, or from NHTSA (Attachment 1). [3]

---

[1] Dated February 2002, I was unable to locate Safety Recall A10 at the NHTSA website, and it was only recently that you located its cover letter of January 4, 2002 from Matthew Reynolds of the DaimlerChrysler Vehicle Compliance Office.

[2] Although refusing to be interviewed, Chrysler re-emphasized this public posturing/vernacular in their statement submitted to an ABC News report which described the death of Mrs. Susan Kline; a case we reviewed pictorially in Attachment F of DP-09-005.

[3] As you will see below, Chrysler's promotional use of the phrase 'fuel tank skid plate' is misleading since it implies a purpose restricted to mere recreation. In truth, the essential elements of fuel system crashworthiness are intrinsic to its purpose/design. Internally, for decades, and at the engineering level, it has been referred to as *"a protective impact deflection structure."*

Subject 1: Jeep Grand Cherokee Defect Petition 09-005 (DP-09-005) File Update

I recently re-acquired a document that was part of my Chrysler FMVSS-301 files (Attachment 2). This "CONFIDENTIAL" August 24, 1978 memo by Mr. Leonard Baker, former Safety Manager of Chrysler Engineering,[4] is entitled: Fuel System Design–Chrysler Passenger Car and Trucks. The subsection "Truck – Fuel Tank Location" states:

> *" Chrysler is investigating fuel tank relocation ahead of the rear wheels for vans and multipurpose vehicles, but present plans for pickups through 1983 and for MPV's and vans through 1985 have the fuel tank located behind the rear wheels. In vehicles both with and without bumpers there is a concern with vertical height differences that create a mismatch with passenger car bumpers. Where fuel tank location behind the rear axle is all that is feasible, a protective impact deflection structure may have to be provided whether or not a bumper is provided. An investigation whether to relocate the fuel tank or to provide impact deflecting structures is presently underway. "* (Attachment 3)

In stark contrast to an "on the surface" wording that was legally deployed in Safety Recall A10, this "Baker memo" of the former Chrysler Corporation (Old Carco) confirms detailed internal knowledge of the following fundamental fuel system defect/crashworthiness issues:

1. The fundamental lack of safety when fuel tanks are NOT located "*ahead of the rear wheels*" (such as in the Ford Pinto or the 1993-2004 Jeep Grand Cherokee).
2. The fundamental lack of safety when fuel tanks are located below the rear bumper, and are therefore vulnerable to the underride accident scenario due to *"a concern with vertical height differences that create a mismatch with passenger car bumpers"* (such as in the1993-2004 Jeep Grand Cherokee).
3. The fundamental lack of safety when fuel tanks are unshielded; that is, when these have NOT been provided with *"a protective impact deflection structure"* (i.e. a fuel tank skid plate, which would have "repaired" the 1996 Jeep Grand Cherokee driven by Mrs. Kline). [5]

All three of these fuel system defect/crashworthiness issues were intrinsic to the accident sequence which occurred on February 24, 2007; leading to the horrific death of New Jersey resident Mrs. Susan Kline. All three fuel system defect/crashworthiness issues were corrected in 2005 with the WK version of the Jeep Grand Cherokee; an engineering design which was heavily influenced by Daimler which has not had any fire related severe burn or death victims. [6]

---

[4] Mr. Baker later moved to an organization promoted as the Product Analysis Group. In-truth Product Analysis is part of the Chrysler Legal department. In this later role, Baker reported to staff such as Mr. Lewis Goldfarb (Lead attorney for safety defect litigation) and Mr. William O'Brien (Chrysler Counsel); both of whom were involved in the confiscation of my Chrysler office safety files (Attachment 2). Attachment 3 was written to Mr. Robert M. Sinclair, who later became Executive VP of Chrysler Engineering, reporting to President Hal Sperlich and Chairman Lee Iacocca.

[5] Please see footnote 3, page one. It should be recognized that discussion of *"a protective impact deflection structure"* was occurring/extensive during a period when plastic fuel tanks were not yet in use at Chrysler.

[6] Option "XEE" is not available on the 2005-2010 WK Jeep Grand Cherokee since these versions are equipped with *"a protective impact deflection structure"* (i.e. a fuel tank skid plate) as standard. This is also true for the 2011 WL version which shares major development/part commonality with the Mercedes-Benz ML Class SUV (which has never included the three fuel system design defects described by Baker).

Subject 2: Has Chrysler Group LLC Declared the Bankruptcy Order Void?

I am sharing this "Confidential" Baker memo with no moral or ethical risk. However, public disclosure of related or similar documents may pose a legal risk.

On March 30, 2009 President Obama announced the determination by his 'Auto Task Force' that a taxpayer-funded bailout would require that Chrysler LLC (Old Carco) file for bankruptcy. The latter was granted by Judge Arthur Gonzalez of the U.S. Bankruptcy Court for the Southern District of New York on June 1, 2009. Since that ruling, billions of taxpayer dollars have been funneled to Chrysler Group LLC (New Carco), including a near-billion-dollar grant to Chrysler dealers. In bankruptcy court filings Chrysler declared that it will:

"Only pay incentives to those dealers that they believe have value to the acquiring company."

Respecting the President's knowledge of the bankruptcy laws, Chrysler continually emphasized distinctions between entities that possessed value versus those that did not. Old Carco, allegedly bankrupt circa June 1, 2009, was publicly and unequivocally declared as having no value. Indeed, minutes after the President's announcement, plaintiffs nationwide hurriedly received a facsimile entitled, "Notice of Suggestion of Bankruptcy" alleging this 'no value' status (Attachment 4).

However, in the case of Kline v. Chrysler, Lomans, et al., Chrysler Group LLC has ostensibly declared the bankruptcy status of Old Carco as void. In response to discovery (served on April 22, 2010 for production on May 7, 2010) Chrysler Group LLC has unabashedly reversed its earlier legal position regarding the 'no value' status of Old Carco by repeatedly resurrecting the following pre-bankruptcy rhetoric against plaintiffs:

> *"Assuming an appropriate protective order is entered, Chrysler Group LLC will produce the documents by May 28, 2010. Almost all the (Old Carco) documents you are seeking contain confidential commercial information. As such, Chrysler Group LLC will not produce these (Old Carco) documents without a protective order in place. I will forward a proposed protective order to you with the discovery responses."* (Attachment 5)

In order to secure the billion-dollar taxpayer-funded bailout, Chrysler Group LLC was compelled to liquidate the assets of Old Carco and declare it insolvent (i.e. bankrupt). However, in the closed-door realm of safety defect litigation, Chrysler Group LLC is now proclaiming that this publicly promoted claim of liquidation/insolvency was merely a ruse; that in-reality Old Carco retains substantial value, and therefore the Baker memo and related or similar discovery documents which relate to an *"investigation presently underway"* are commercially proprietary, confidential, and valuable.

Respectfully yours,

Paul V. Sheridan

Enclosures/Attachments

Attachment 1

DAIMLERCHRYSLER

February 2002

Dealer Service Instructions for:

Safety Recall No. A10 -- Fuel Tank Blocker Bracket

Effective immediately, all repairs on involved vehicles are to be performed according to this recall notification. The labor operations for the interim service procedure that was published in the A10 electronic mail (DMAIL) message of January 4, 2002 will be cancelled on March 15, 2002. Those vehicles that have already been repaired by having a skid plate installed, do NOT require any additional service.

Models

2002 (WJ) Jeep® Grand Cherokee

NOTE: This recall applies only to the above vehicles that are equipped with a fuel tank brush guard (WITHOUT Sales Code – XEE) built through December 13, 2001 ***(MDH 121317)****.*

IMPORTANT: Some of the involved vehicles may be in dealer new vehicle inventory. **Federal law requires you to stop sale and complete this recall service on these vehicles before retail delivery.** Dealers should also consider this requirement to apply to used vehicle inventory and should perform this recall on vehicles in for service. Involved vehicles can be determined by using the DIAL VIP System.

Subject

About 71,000 of the above vehicles may not comply with the requirements of Federal Motor Vehicle Safety Standard (FMVSS) 301 – Fuel System Integrity. Under certain accident conditions, the fuel tank may deform and damage an internal control valve. This could allow fuel leakage to occur if the vehicle rolls over. Fuel leakage in the presence of an ignition source can result in a fire.

Repair

A fuel tank blocker bracket must be installed on all involved vehicles.

© Copyright 2002, DaimlerChrysler Corporation, All Rights Reserved

Parts Information

Part Number	Description
CBJ0A100	**Fuel Tank Blocker Bracket**

Each dealer to whom vehicles in the recall were invoiced will receive enough Blocker Bracket Packages to service about **10%** of those vehicles. Each package contains a blocker bracket and a spacer.

Service Procedure

1. Raise the vehicle on an appropriate hoist.
2. Support the fuel tank with an OTC Fuel Tank Jack or equivalent.
3. Remove the four (4) fuel tank-to-rear bumper fascia clips (Figure 1).
4. Loosen, but do not remove, the bolts for the two (2) rear brush guard-to-frame support brackets (Figure 2).

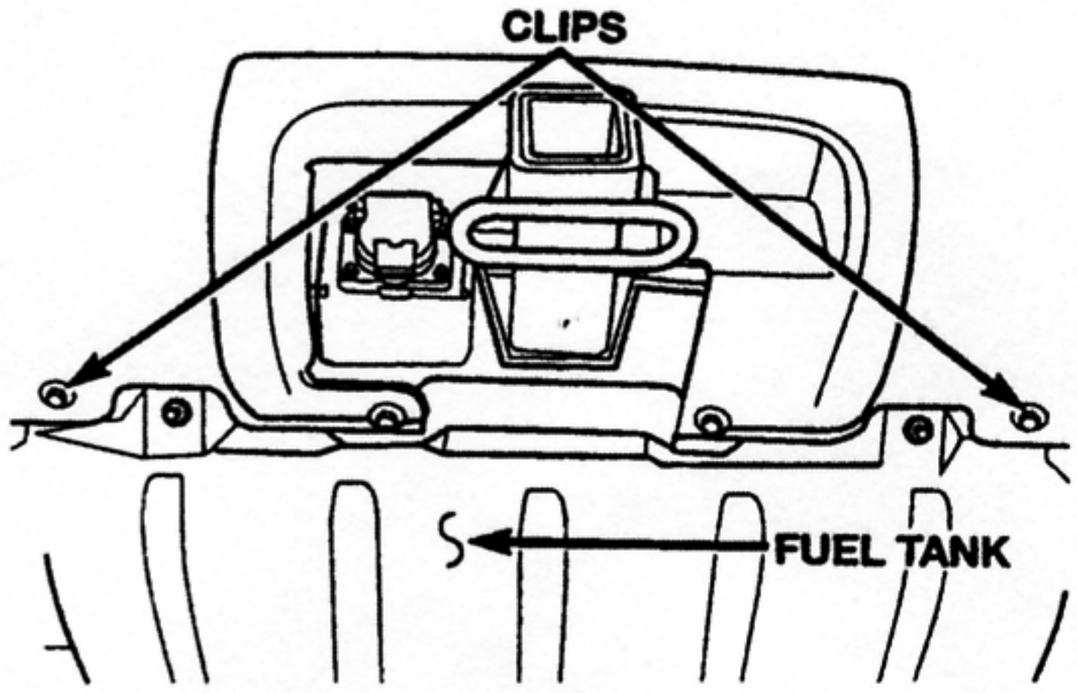

Figure 1

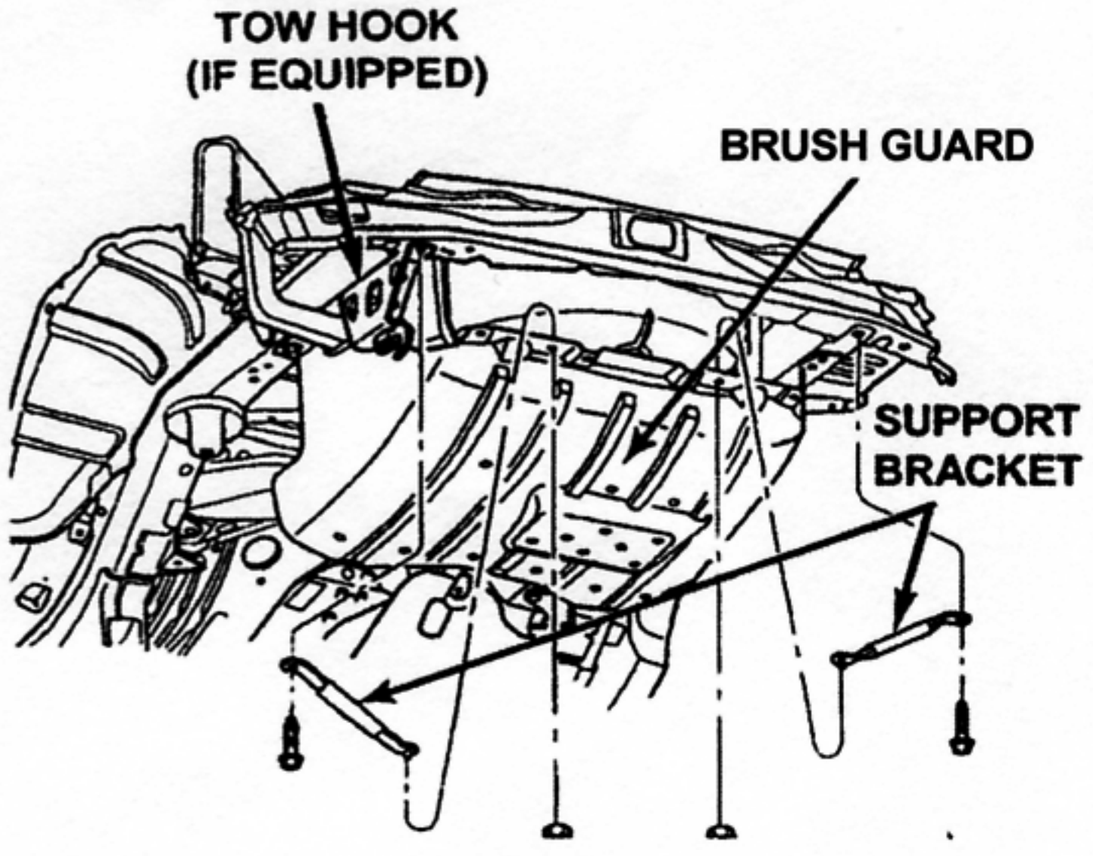

Figure 2

Service Procedure (Continued)

5. Loosen, but do not remove, the bolts for the front brush guard-to-frame support bracket (Figure 3).

6. Disconnect the electrical harness clip from the left side of the brush guard.

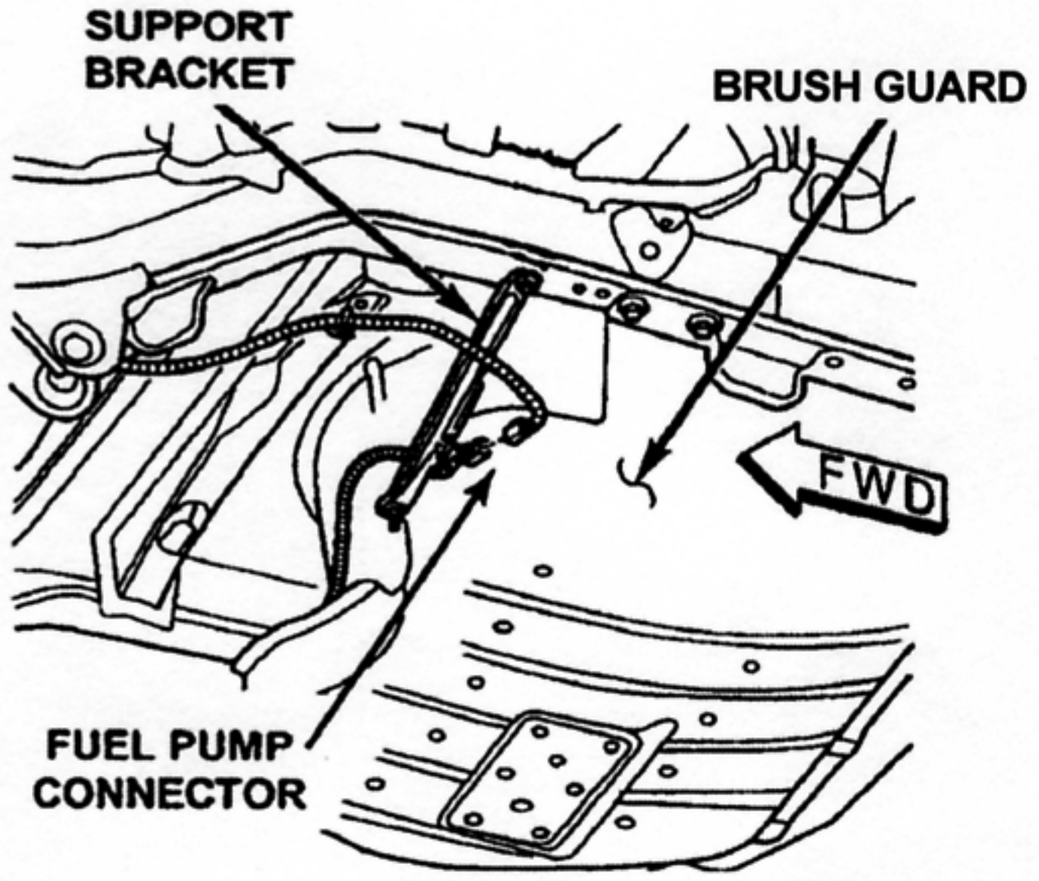

Figure 3

7. Remove the three (3) forward-most LEFT SIDE brush guard/trailer hitch (if equipped) mounting bolts (Figure 4). **Do NOT remove the rear left brush guard/trailer hitch mounting bolt.**

8. Loosen, but do not remove, the remaining four (4) brush guard bolts (one left side and three right side).

9. **<u>For vehicles equipped with a trailer hitch</u>,** loosen but do not remove, the two (2) rear-most trailer hitch bolts.

10. Using a large pry bar, reposition the fuel tank/brush guard assembly as far to the right side of the vehicle (passenger side) as possible.

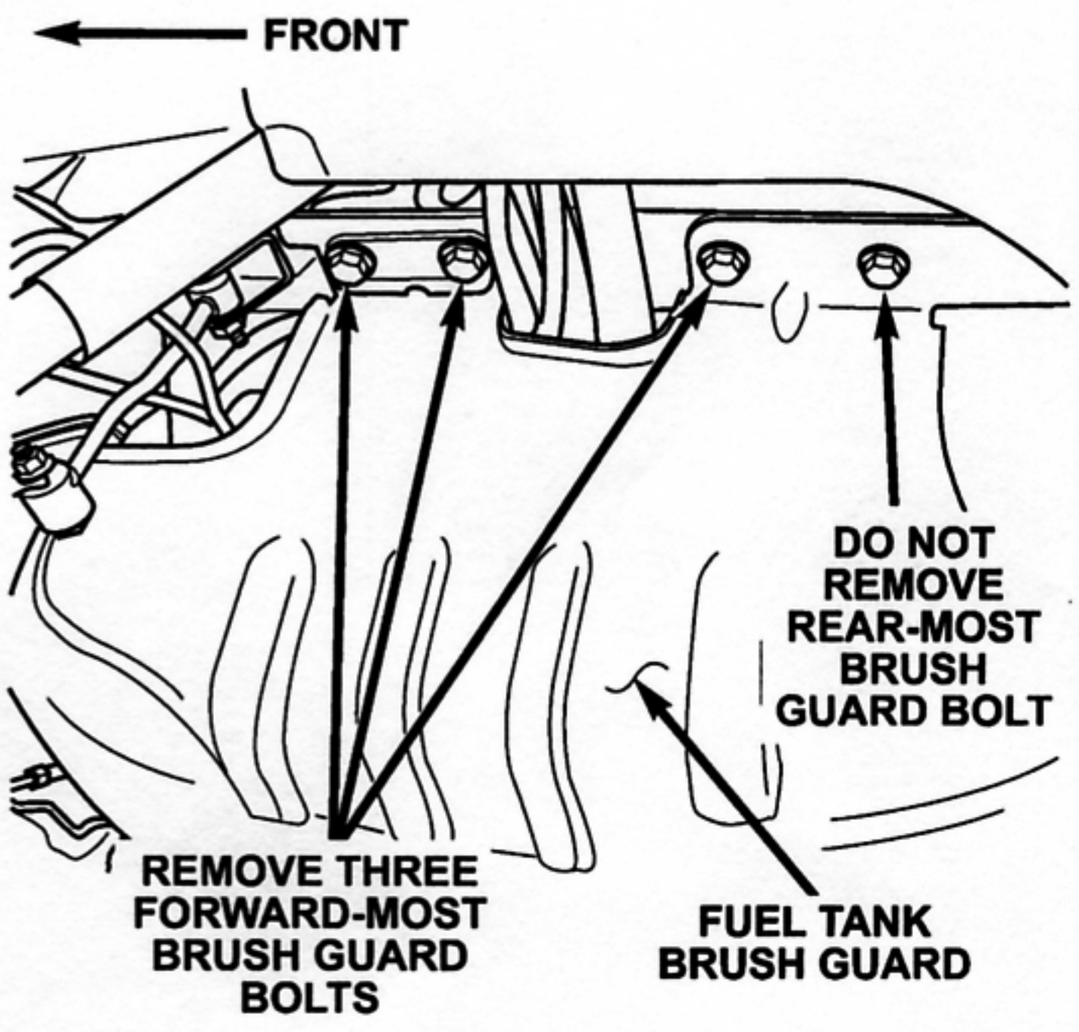

Figure 4

Service Procedure (Continued)

11. With an assistant holding the tank assembly in the right-most position, and using a 12 inch extension, tighten the three right and the rear-most left, brush guard bolts to 65 ft-lbs (88 N·m).

12. **For vehicles equipped with a trailer hitch,** tighten the two (2) rear-most trailer hitch bolts to 65 ft-lbs (88 N·m).

13. Install the fuel tank blocker bracket adjacent to the left side of the fuel tank brush guard (Figure 5).

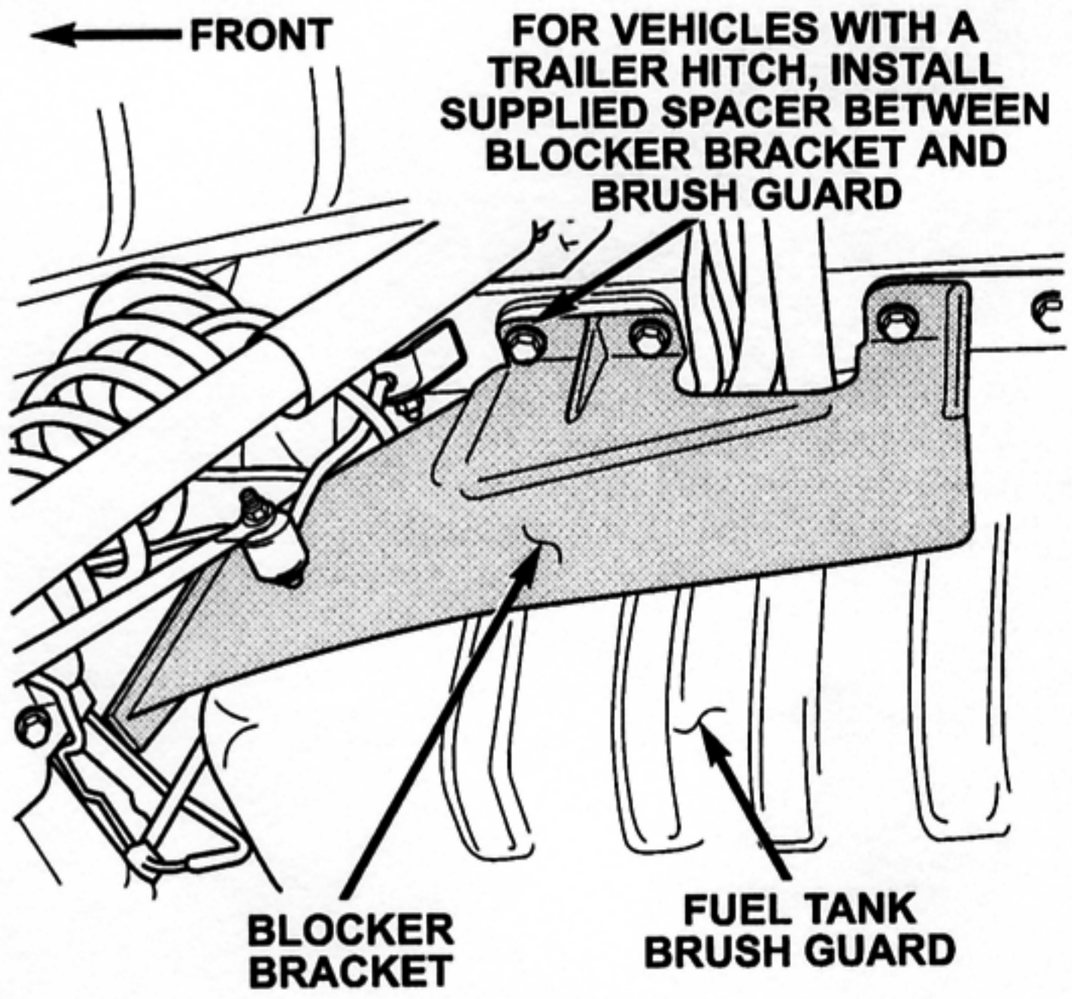

Figure 5

IMPORTANT: For vehicles equipped with a trailer hitch, install the supplied spacer between the blocker bracket and the brush guard at the forward-most bolt hole location.

14. Position the blocker bracket as far to the right as possible (next to the brush guard) and then install the fuel tank brush guard/trailer hitch mounting bolts (Figure 5). Using a 12 inch extension, tighten the bolts to 65 ft-lbs (88 N·m).

IMPORTANT: Tighten the forward-most blocker bracket bolt first.

15. Secure the electrical harness to the blocker bracket with the harness clip. If the clip was damaged during removal, use a new clip (PN 04688451).

16. Tighten the front brush guard-to-frame support bracket bolts (Figure 3).

17. Tighten the bolts for the two (2) rear brush guard-to frame support brackets (Figure 2).

18. Install the four (4) rear fascia-to-fuel tank push pins (Figure 1).

19. Remove the fuel tank support.

20. Lower the vehicle.

Completion Reporting and Reimbursement

Claims for vehicles that have been serviced must be submitted on the DIAL System. Claims submitted will be used by DaimlerChrysler to record recall service completions and provide dealer payments.

Use the following labor operation number and time allowance:

	Labor Operation Number	Time Allowance
Install Fuel Tank Blocker Bracket	14-A1-01-84	0.3 hours

Add the cost of the recall parts package plus applicable dealer allowance to your claim.

NOTE: See the Warranty Administration Manual, Recall Claim Processing Section, for complete recall claim processing instructions.

Parts Return

Not applicable.

Dealer Notification and Vehicle List

All dealers will receive a copy of this dealer recall notification letter by first class mail. Two additional copies will be sent through the DCMMS, and the MDS2 will be updated to include this recall in the near future. **Each dealer to whom involved vehicles were invoiced will receive a list of their involved vehicles.** The vehicle list is arranged in Vehicle Identification Number (VIN) sequence. Owners known to DaimlerChrysler are also listed. The lists are for dealer reference in arranging for service of involved vehicles.

DIAL System Functions 53 and VIP

All involved vehicles have been entered to DIAL System Functions 53 and VIP for dealer inquiry as needed.

Function 53 provides involved dealers with an updated VIN list of their incomplete vehicles. The customer name, address and phone number are listed if known. Completed vehicles are removed from Function 53 within several days of repair claim submission. To use this system, type "53" at the "ENTER FUNCTION" prompt, then type "ORDA10".

Owner Notification and Service Scheduling

All involved vehicle owners known to DaimlerChrysler are being notified of the service requirement by first class mail. They are requested to schedule appointments for this service with their dealers. A copy of the owner letter is attached.

Enclosed with each owner letter is an Owner Notification Form. The involved vehicle and recall are identified on the form for owner or dealer reference as needed.

Vehicle Not Available

If a vehicle is not available for service, let us know by filling out the pre-addressed Owner Notification Form or describe the reason on a postcard and mail to:

DaimlerChrysler Corporation
CIMS 482-00-85
800 Chrysler Drive East
Auburn Hills, Michigan 48326-2757

Additional Information

If you have any questions or need assistance in completing this action, please contact your Zone Service Office.

Customer Services Field Operations
DaimlerChrysler Corporation

Attachment 2

LAW OFFICES

CHAMBERS STEINER

A Professional Corporation

1490 FIRST NATIONAL BUILDING
DETROIT, MICHIGAN 48226-3592

Telephone (313) 961-0130
Fax (313) 961-8178

KALAMAZOO OFFICE
7040 STADIUM DRIVE
KALAMAZOO, MICHIGAN 49009
Telephone (616) 375-4300
Fax (616) 375-4077

ROSEVILLE OFFICE
25235 GRATIOT AVE.
ROSEVILLE, MICHIGAN 48066
(810) 773-3455

JOHN F. CHAMBERS
SANFORD L. STEINER
MICHAEL S. MAZUR
ALEXANDER T. ORNSTEIN
DARRELL M. AMLIN
COURTNEY E. MORGAN
JEFFREY T. MEYERS
ANGELA J. NICITA
LOUIS G. COREY
JOHN I. KITTEL
RICHARD J. CAROLAN
MICHELLE J. HARRISON
PATRICIA A. MURRAY
CHRISTOPHER S. HARTMAN
FRANKLIN J. CHAMBERS
MARTIN R. STURM
KEVIN P. BURCH
DOUGLAS A. MERROW
LISA A. KLAEREN
FRANK B. MELCHIORE
DANIEL C. BROWN

July 14, 1995

Thomas G. Kienbaum, Esq.
500 Woodward Ave., Suite 4000
Detroit, Michigan 48226-3406

Re: Chrysler vs. Sheridan

Dear Mr. Kienbaum:

I am in receipt of your most recent correspondence regarding the magistrate's recommendation and our providing of information to you regarding office materials. I do not know how you could have reasonably concluded from the correspondence that was forwarded to you that we are of the opinion that there is no basis to conclude that evidence may have been tampered with in this case. Indeed, the anxiety exhibited by the fact that you immediately faxed your reply to me suggests that in reality you hold the opposite opinion. Due to the necessity of my attendance at federal court in Wichita, Kansas this week, I did not believe that I was going to be able to comply with the July 14, 1995 deadline. Now, it appears that we are in a position to comply.

The information provided hereunder is based upon our limited and restricted ability to review materials which were allegedly seized from Mr. Sheridan's work space. That review is neither complete, nor did it have as its purpose the ferreting out of all details of evidence tampering which may exist. Lack of inclusion of any specific item in this list shall not be taken as an admission of the authenticity of such a document or other tangible item.

The document submitted by the plaintiff entitled, "Confidential Inventory of Material from Paul V. Sheridan's Cubicle at the Chrysler Technology Center", dated March 16, 1995, has numerous general inconsistencies and inaccuracies based on defendant's knowledge and cursory examination of the actual inventory:

1. This "inventory" fails to list and does not contain the following files:

- Liftgate Latch - General
- Liftgate Latch - Competitive
- Safety Leadership Team - Meeting Minutes
- Safety Leadership Team - Preliminary
- Liftgate Latch - Safety Office
- H. G. Cook Study
- FMVSS 206 - General
- Seat Back Strength - General
- Seat Back Strength - FMVSS 207 Specifications
- Offset Impact - General
- Rear Crash Survivability - General
- FMVSS - 301
- Side Crashworthiness Issues
- FMVSS - 214
- Bumper Issues - General
- NS-Body Bumper
- Taillamp Studies - Zarowitz
- Amber Taillamp - NS-Body
- Rear Seat Headrest - General and Zarowitz
- Back-up Light - General

2. The "inventory" lists files but inaccurately portrays their original/current contents:

- Box #1 - File "NS Liftgate System". This file contained subfiles such as "Customer Injury", "Saginaw", et al. Also contains photographs that were originally in the "Liftgate Latch - General" file which is missing per #1 above. (see page 4 of inventory).

- Box #1 - File "NHTSA News" contains only half its original contents (see page 4 of inventory).
- Box #1 - File on "Muth Technologies" not listed; subfile "RSZ" not listed (see page 4).

- Entry on page 8 of inventory indicates that a file contained "correspondence for Dr. Detroit Motorsports". No correspondence was ever sent to Mr. Sheridan's Chrysler office for Dr. Detroit Motorsports, nor was any on file at that location.

3. The "inventory" identifies files and file locations by box number but the location identified was found to be inaccurate.

4. The "inventory" fails to explain/list file materials that were found in the actual inventory by defendant:

- Documents relating to FMVSS-208 dated December 21 were found in Box #1 in file "NS-Restraints". This file is not listed on inventory. (see page 4)

5. This "inventory" fails to accurately explain/list documents allegedly found in the cubicle, as described during the deposition of plaintiff's investigators.

6. The "inventory" fails to list files that were found in the actual inventory.

7. The "inventory fails to list/identify location of specific video tapes:

- Environmentally Safe Oil Changes
- Formula SAE
- IIHS Bumper Tests
- Etc.

8. The "inventory" fails to accurately list contents of computer disks and computer hard drive.

This response is not complete. Further examinations of inventory is still pending. Preliminary examinations cover documents listed through page 18, but not Box #7. Document listings from page 18 through 39 have not yet been examined.

Sincerely,

Courtney E. Morgan, Jr.

CEM/mn
cc: George Googasian, Esq.
(Via Facsimile)

Attachment 3

"C O N F I D E N T I A L

Inter Company Correspondence

File Code: | Date: August 24, 1978

From—Name & Department	Division	Plant/Office	CIMS Number
R. M. Sinclair, Director International Product Development	Product Plan. & Design Office	Chrysler Center	416-20-15

To—Name & Department	Division	Plant/Office	CIMS Number
L. L. Baker, Manager Automotive Safety	Engineering Office	Chrysler Center	418-12-34

Subject: Fuel System Design - Chrysler Passenger Cars And Trucks.

Pursuant to the discussions between Messrs. Vining, Jeffe, Sperlich and yourself with Mr. Mochida on August 22, the fuel system design for domestic passenger cars and trucks is summarized for Mr. Mochida's information.

Not only are the impact performance requirements of MVSS-301 pertinent to the design approach but the significant increase in the last few years in the numbers of product liability cases involving fuel system fires and the increase in the size of the awards by sympathetic juries has to be recognized. In the Ford Pinto case the NHTSA Office of Defects Investigation selected arbitrary performance criteria of minimal or no fuel leakage when the test car is impacted in the rear by a full size car at 35 mph as a basis for questioning the safety of a recall modification of the Pinto.

- Passenger Car

  Fuel Tank Location

  The front wheel drive configuration in Chrysler's Omni and Horizon allowed the fuel tank to be located beneath the rear seat. This location provides the protection of all of the structure behind the rear wheels—as well as the rear wheels themselves—to protect the tank from being damaged in a collision. This same location will be used in the new 1981 K-Body cars which will also have a front wheel drive.

  The rear wheel drive H-Body scheduled for introduction in 1983 will have the fuel tank located over the rear axle and beneath the floor pan.

  The question of whether M, R or J-Body cars should be converted to tank over axle prior to their phase-out is a matter under intensive study at this time.

  Filler Neck And Cap

  As the fuel tank is moved to a more forward location, the fuel fill is moved to the side of the car. The fuel cap will be recessed below the body surface and a fuel fill door provided. The fuel filler neck is designed to break away from the car body with the fuel filler cap still in place.

  In this design the filler cap and fill neck or fill tube remain with the tank to avoid separation and possible fuel leakage. This side fill is scheduled for J and M-Bodies in 1980 and the Y-car in 1981.

The fuel fill is less likely to be damaged in a sideswipe when located on the right side of the car. As new models are introduced, the fuel fill will be moved to the right side of the vehicle. This may also offer greater protection to drivers who run out of gasoline on the highway, since they will fill the tank on the side away from the traffic.

Structure

In 1979 through 1983, the M, R, and J model cars which have the fuel tank under the floor pan behind the rear wheels, structural reinforcement of the longitudinals on each side of the tank, shielding of any unfriendly surfaces adjacent to the tank, and the design of straps and hangers to limit undesired tank movement will be employed.

. Truck

Fuel Tank Location

The same principles regarding fuel tank location apply to truck design. It is important that these larger fuel tanks are not only shielded from damage in a collision but do not break away from the truck and thereby spread fuel onto the roadway. The approach used by Mitsubishi on the SP-27 of locating the fuel tank ahead of the rear wheels appears to provide good protection for the tank.

The front wheel drive T-115 to be introduced in 1982 will have the fuel tank ahead of the rear wheels and under the rear seat. However, in rear wheel drive trucks there is no clearance over the axle for fuel tank installation and in many cases there is insufficient space ahead of the axle for fuel tanks of the desired capacity.

Chrysler is investigating fuel tank relocation ahead of the rear wheels for vans and multi-purpose vehicles, but present plans for pickups through 1983 and for MPV's and vans through 1985 have the fuel tank located behind the rear wheels. In vehicles both with and without bumpers there is a concern with vertical height differences that create a mismatch with passenger car bumpers. Where fuel tank location behind the rear axle is all that is feasible, a protective impact deflection structure may have to be provided whether or not a bumper is provided. An investigation whether to relocate the fuel tank or to provide impact deflecting structures is presently underway.

Fill Neck And Cap

All trucks and vans have side fill. The sweptline pickup truck (DW 1-3) and multi-purpose vehicles (AD-1 & AW-1) will have a recessed fill cap and fuel filler door beginning in 1981.

L. L. Baker

Attachment 4

HANLON BOGLIOLI & HANLON PC

ATTORNEYS AT LAW

ROBERT M. HANLON*
BERNARD F. BOGLIOLI*
BONNIE H. HANLON*
ROBERT M. HANLON, JR.^
MARY O'KEEFE MASSEY*
ROBERT M. COOK¤

WILLIAM F. HANLON (1901-1972)

OF COUNSEL
ALBERT W. CORNACHIO III+

P.O. BOX 6147
EDISON, NEW JERSEY 08818
(732) 346-9555
FAX (732) 346-1501

HAND DELIVERY
523 RARITAN CENTER PARKWAY
EDISON, NEW JERSEY 08837

800 WESTCHESTER AVENUE, S-608
RYE BROOK, NY 10573
(914) 220-5322 / FAX (914) 696-0450

WEST LONG BRANCH, NJ
(732) 229-8020 / FAX (732) 870-0772

RICHARD P. GROSSMAN, JR.*
RICHARD J. MIRRA*
CHRISTINE GIORDANO HANLON^

* Admitted NJ Only
^ Admitted NJ & NY
¤ Admitted NJ & PA
+ Admitted NY Only

REPLY TO: EDISON

May 1, 2009

Clerk
Morris County Superior Court
Morris County Court House
Washington and Court Streets
PO Box 910
Morristown, New Jersey 07963-0910

RE: Kline v. Chrysler LLC, et al
Docket No. MRS-L-3575-08
Our File No. 2805

Dear Sir/Madam:

Enclosed are an original and one copy of a Notice of Suggestion of Bankruptcy staying all litigation against Chrysler LLC.

Kindly file same and return a stamped filed copy to this office in the enclosed self-addressed stamped envelope.

Thank you for your attention in this regard.

Very truly yours,

ROBERT M. COOK

RMC/laf
Enclosures
cc: Angel M. De Filippo, Esq.
Grieco, Oates & De Filippo, LLC

Margaret M. Mitchell, Esq.
Weston, Stierli, McFadden & Capotorto

MAY - 4 2009

cc: Michael J. Rossignol, Esq.
Law Office of Michael J. Rossignol

James T. Gill, Esq.
Leary, Bride, Tinker & Moran

HANLON BOGLIOLI & HANLON PC
P.O. Box 6147
Edison, New Jersey 08818 (Mailing Address)
523 Raritan Center Parkway
Edison, New Jersey 08837
(732) 346-9555
Attorneys for Defendant, Chrysler LLC
improperly plead as DaimlerChrysler Corporation a/k/a Chrysler Corporation

THOMAS KLINE, as Administrator Ad Prosequendum of the Heirs at Law of SUSAN MORRIS KLINE (Deceased), as Administrator of the Estate of SUSAN MORRIS KLINE, and THOMAS KLINE, Individually Plaintiffs, vs. VICTORIA MORGAN-ALCALA, CARLOS ALCALA, NATALIE RAWLS, DAIMLERCHRYSLER CORPORATION, a/k/a CHRYSLER CORPORATION, LOMAN AUTO GROUP, JOHN DOES, A through Z, (Names being fictitious), ABC CORPORATIONS, 1 through 100, (Names being fictitious), Defendants.	SUPERIOR COURT OF NEW JERSEY LAW DIVISION: MORRIS COUNTY DOCKET NO. MRS-L-3575-08 Civil Action **NOTICE OF SUGGESTION OF BANKRUPTCY**

PLEASE TAKE NOTICE THAT on April 30, 2009 (the "Petition Date"), Chrysler LLC ("Chrysler") and certain domestic direct and indirect subsidiaries (the "Debtors"), filed a voluntary petition for relief in the United States Bankruptcy Court for the Southern District of New York (the "Bankruptcy Court") under chapter 11 of title 11 of the United States Code (the "Bankruptcy Code"), which is being jointly administered and which is pending before the Honorable Arthur J. Gonzalez as Case No. 09-50002 (AJG).

CORPORATION & A LIMITED LIABILITY COMPANY
ATTORNEYS AT LAW

PLEASE TAKE FURTHER NOTICE THAT, in accordance with the automatic stay imposed by operation of section 362 of the Bankruptcy Code, from and after the Petition Date no cause of action arising prior to, or relating to the period prior to, the Petition Date, including this action, may be commenced or prosecuted against the Debtors including Chrysler LLC, improperly plead as DaimlerChrysler Corporation a/k/a Chrysler Corporation, in this civil action, and no related judgment may be entered or enforced against the Debtors outside of the Bankruptcy Court without the Bankruptcy Court first issuing an order lifting or modifying the automatic stay for such specific purpose.

Dated: May 1, 2009

HANLON BOGLIOLI & HANLON, PC
Attorneys for Defendant Chrysler LLC, improperly plead as DaimlerChrysler Corporation a/k/a Chrysler Corporation

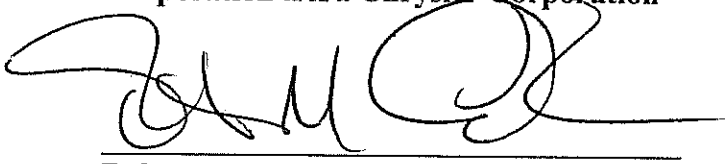

Robert M. Cook, Esq.

ATTORNEYS AT LAW
CORPORATION A LIMITED LIABILITY COMPANY

Attachment 5

Founded in 1852
by Sidney Davy Miller

MILLER CANFIELD

MICHIGAN: Ann Arbor
Detroit • Grand Rapids
Kalamazoo • Lansing
Saginaw • Troy
FLORIDA: Naples
ILLINOIS: Chicago
NEW YORK: New York
OHIO: Cincinnati
CANADA: Toronto • Windsor
CHINA: Shanghai
MEXICO: Monterrey
POLAND: Gdynia
Warsaw • Wroclaw

M. SHEILA JEFFREY
TEL (734) 668-7797
FAX (734) 747-7147
E-MAIL jeffrey@millercanfield.com

Miller, Canfield, Paddock and Stone, P.L.C.
101 North Main Street, Seventh Floor
Ann Arbor, Michigan 48104
TEL (734) 663-2445
FAX (734) 747-7147
www.millercanfield.com

May 5, 2010

VIA FACSIMILE (973) 243-2095 AND FEDERAL EXPRESS
Angel M. DeFilippo, Esq.
Grieco, Oates & DeFilippo, LLC
414 Eagle Rock Avenue, Suite 200
West Orange, New Jersey 07052

Re: Kline (Thomas, et al.) v. Chrysler Corporation, et al.

Dear Ms. DeFilippo:

My firm is discovery counsel for Chrysler Group LLC, which is the custodian of records for Old Carco LLC (f/k/a Chrysler LLC). I am in receipt of the subpoena you served on Chrysler Group LLC. I note that the Notice of Deposition is dated March 10, 2010 and the Order Issuing Subpoena is dated April 2, 2010. However, Chrysler Group LLC was not served with the subpoena until April 28, 2010.

The subpoena directs Chrysler Group LLC either to provide a witness for a records deposition on May 7, 2010 or produce the requested documents prior to May 7, 2010. Because of the belated service of the subpoena, and the voluminous documents sought therein, Chrysler Group LLC is unable either to produce a witness or the documents on May 7, 2010. Chrysler Group LLC will provide responses and objections to the discovery requests appended to the subpoena by May 7, however.

Assuming an appropriate protective order is entered, Chrysler Group LLC will produce the documents by May 28, 2010. Almost all the documents you are seeking contain confidential commercial information. As such, Chrysler Group LLC will not produce these documents without a protective order in place. I will forward a proposed protective order to you with the discovery responses.

Please do not hesitate to contact me if you have any questions.

Sincerely yours,

By: _____
M. Sheila Jeffrey
Attorney at Law

MSJ/wsb
cc: Courtney E. Morgan, Jr., Esq. – Via Facsimile (313) 961-8178 and Federal Express
17,944,035.1\142778-00081

Founded in 1852
by Sidney Davy Miller

MILLER CANFIELD

M. SHEILA JEFFREY
TEL (734) 668-7797
FAX (734) 747-7147
E-MAIL jeffrey@millercanfield.com

Miller, Canfield, Paddock and Stone, P.L.C.
101 North Main Street, Seventh Floor
Ann Arbor, Michigan 48104
TEL (734) 663-2445
FAX (734) 747-7147
www.millercanfield.com

MICHIGAN: Ann Arbor
Detroit • Grand Rapids
Kalamazoo • Lansing
Saginaw • Troy
FLORIDA: Naples
ILLINOIS: Chicago
NEW YORK: New York
OHIO: Cincinnati
CANADA: Toronto • Windsor
CHINA: Shanghai
MEXICO: Monterrey
POLAND: Gdynia
Warsaw • Wrocław

May 5, 2010

VIA FACSIMILE (973) 243-2095 AND FEDERAL EXPRESS
Angel M. DeFilippo, Esq.
Grieco, Oates & DeFilippo, LLC
414 Eagle Rock Avenue, Suite 200
West Orange, New Jersey 07052

Re: Kline (Thomas, et al.) v. Chrysler Corporation, et al.

Dear Ms. DeFilippo:

My firm is discovery counsel for Chrysler Group LLC, which is the custodian of records for Old Carco LLC (f/k/a Chrysler LLC). I am in receipt of the subpoena you served on Chrysler Group LLC. I note that the Notice of Deposition is dated March 10, 2010 and the Order Issuing Subpoena is dated April 2, 2010. However, Chrysler Group LLC was not served with the subpoena until April 28, 2010.

The subpoena directs Chrysler Group LLC either to provide a witness for a records deposition on May 7, 2010 or produce the requested documents prior to May 7, 2010. Because of the belated service of the subpoena, and the voluminous documents sought therein, Chrysler Group LLC is unable either to produce a witness or the documents on May 7, 2010. Chrysler Group LLC will provide responses and objections to the discovery requests appended to the subpoena by May 7, however.

Assuming an appropriate protective order is entered, Chrysler Group LLC will produce the documents by May 28, 2010. Almost all the documents you are seeking contain confidential commercial information. As such, Chrysler Group LLC will not produce these documents without a protective order in place. I will forward a proposed protective order to you with the discovery responses.

Please do not hesitate to contact me if you have any questions.

Sincerely yours,

By: M. Sheila Jeffrey
M. Sheila Jeffrey
Attorney at Law

MSJ/wsb
cc: Courtney E. Morgan, Jr., Esq. – Via Facsimile (313) 961-8178 and Federal Express
17,944,035.1\142778-00081

Founded in 1852
by Sidney Davy Miller

MILLER CANFIELD

MICHIGAN: Ann Arbor
Detroit • Grand Rapids
Kalamazoo • Lansing
Saginaw • Troy
FLORIDA: Naples
ILLINOIS: Chicago
NEW YORK: New York
OHIO: Cincinnati
CANADA: Toronto • Windsor
CHINA: Shanghai
MEXICO: Monterrey
POLAND: Gdynia
Warsaw • Wroclaw

M. SHEILA JEFFREY
TEL (734) 668-7797
FAX (734) 747-7147
E-MAIL Jeffrey@millercanfield.com

Miller, Canfield, Paddock and Stone, P.L.C.
101 North Main Street, Seventh Floor
Ann Arbor, Michigan 48104
TEL (734) 663-2445
FAX (734) 747-7147
www.millercanfield.com

RECEIVED
MAY 06 2010
MORGAN & MEYERS, PLC

May 5, 2010

VIA FACSIMILE (973) 243-2095 AND FEDERAL EXPRESS
Angel M. DeFilippo, Esq.
Gricco, Oates & DeFilippo, LLC
414 Eagle Rock Avenue, Suite 200
West Orange, New Jersey 07052

Re: Kline (Thomas, et al.) v. Chrysler Corporation, et al.

Dear Ms. DeFilippo:

My firm is discovery counsel for Chrysler Group LLC, which is the custodian of records for Old Carco LLC (f/k/a Chrysler LLC). I am in receipt of the subpoena you served on Chrysler Group LLC. I note that the Notice of Deposition is dated March 10, 2010 and the Order Issuing Subpoena is dated April 2, 2010. However, Chrysler Group LLC was not served with the subpoena until April 28, 2010.

The subpoena directs Chrysler Group LLC either to provide a witness for a records deposition on May 7, 2010 or produce the requested documents prior to May 7, 2010. Because of the belated service of the subpoena, and the voluminous documents sought therein, Chrysler Group LLC is unable either to produce a witness or the documents on May 7, 2010. Chrysler Group LLC will provide responses and objections to the discovery requests appended to the subpoena by May 7, however.

Assuming an appropriate protective order is entered, Chrysler Group LLC will produce the documents by May 28, 2010. Almost all the documents you are seeking contain confidential commercial information. As such, Chrysler Group LLC will not produce these documents without a protective order in place. I will forward a proposed protective order to you with the discovery responses.

Please do not hesitate to contact me if you have any questions.

Sincerely yours,

By: M. Sheila Jeffrey
M. Sheila Jeffrey
Attorney at Law

MSJ/wsb
cc: Courtney E. Morgan, Jr., Esq. – Via Facsimile (313) 961-8178 and Federal Express
17,944,035.1\142778-00081

Original - Return 1st copy - Witness 2nd copy - File 3rd co

STATE OF MICHIGAN
JUDICIAL DISTRICT
SIXTH JUDICIAL CIRCUIT
COUNTY PROBATE

SUBPOENA
Order to Appear and/or Produce

OAKLAND COUNTY 10-109074-CZ
JUDGE RAE LEE CHABOT
KLINE,THOMAS. v MORGANALCALA

Police Report No. (if applicable)

Court Address
1200 N. Telegraph Road, Dept. 404, Pontiac, MI 48341

Court telephone no.
248-858-1000

Plaintiff(s) Petitioner(s)		Defendant(s) Respondent(s)
☐ People of the State of Michigan ☒ IN RE THOMAS KLINE	V	VICTORIA MORGAN-ALCALA, et al
☒ Civil ☐ Criminal		Charge

☐ Probate In the matter of

In the Name of the People of the State of Michigan. TO:

NEW CARCO ACQUISITION LLC, a/k/a
NEW SCHRYSLER
30600 Telegraph, Suite 2345
Bingham Farms, MI 48025

If you require special accommodations to use the court because of disabilities, please contact the court immediately to make arrangements.

YOU ARE ORDERED:

☐ 1. to appear personally at the time and place stated below; You may be required to appear from time to time and day to day until excused.

☐ The court address above ☒ Other: 30600 Telegraph Road, Suite 2925, Bingham Farms, MI 48025

Day	Date	Time
Friday	May 7	9:00 a.m.

☐ 2. Testify at trial.

☒ 3. Produce/permit inspection or copying of the following items: See attached

☐ 4. Testify as to your assets, and bring with you the items listed in line 3 above.

☐ 5. Testify at deposition.

☐ 6. MCL 600.6104(2), 600.6116, or 600.6119 prohibition against transferring or disposing of property attached.

☐ 7. Other: **The requested items can be copied and mailed to Grieco, Oates & DeFilippo, LLC to meet the subpoena requirements.**

☐ 8.

Person requesting subpoena		Telephone no.
Courtney E. Morgan, Jr.		313-961-0130
Address		
3200 Greenfield, Suite 260		
City	State	Zip
Dearborn	MI	48120

NOTE: If requesting a debtor's examination under MCL 600.6110, or an injunction under item 6, this subpoena must be issued by a judge. For a debtor examination, the affidavit of debtor examination on the other side of this form must also be completed. Debtor's assets can also be discovered through MCR 2.305 without the need for an affidavit of debtor examination or issuance of this subpoena by a judge.

FAILURE TO OBEY THE COMMANDS OF THE SUBPOENA OR APPEAR AT THE STATED TIME AND PLACE MAY SUBJECT YOU TO PENALTY FOR CONTEMPT OF COURT.

April 22, 2010
Date

Judge/Clerk/Attorney Courtney E. Morgan, Jr. (P29137)

Court use only
☐ Served ☐ Not Served

MC 11 (6/99) SUBPOENA, Order to Appear and/or Produce

MCL 600.1455, 600.1701, 600.6110, 600.6119;

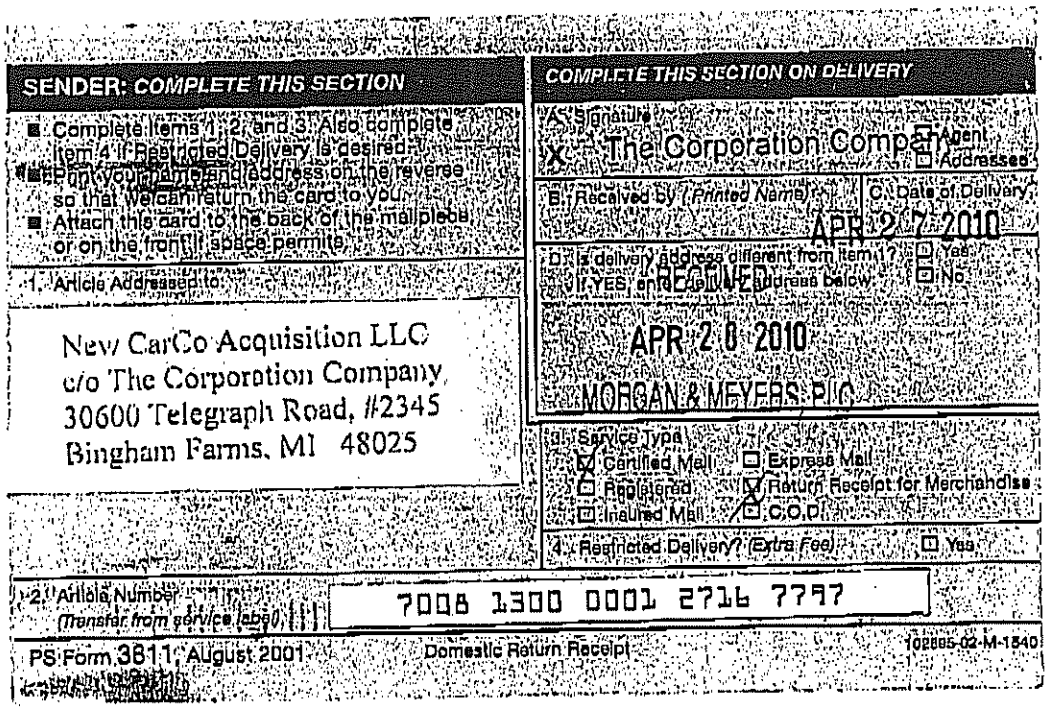

SENDER: COMPLETE THIS SECTION

- Complete items 1, 2, and 3. Also complete item 4 if Restricted Delivery is desired.
- Print your name and address on the reverse so that we can return the card to you.
- Attach this card to the back of the mailpiece, or on the front if space permits.

1. Article Addressed to:

New CarCo Acquisition LLC
c/o The Corporation Company
30600 Telegraph Road, #2345
Bingham Farms, MI 48025

COMPLETE THIS SECTION ON DELIVERY

A. Signature
X The Corporation Company ☐ Agent ☐ Addressee

B. Received by (Printed Name) | C. Date of Delivery
APR 27 2010

D. Is delivery address different from item 1? ☐ Yes
If YES, enter delivery address below: ☐ No

RECEIVED
APR 26 2010
MORGAN & MEYERS, PLC

3. Service Type
☑ Certified Mail ☐ Express Mail
☐ Registered ☑ Return Receipt for Merchandise
☐ Insured Mail ☐ C.O.D.

4. Restricted Delivery? (Extra Fee) ☐ Yes

2. Article Number (Transfer from service label) 7008 1300 0001 2716 7797

PS Form 3811, August 2001 Domestic Return Receipt 102595-02-M-1540

End of Document

ATTACHMENT J

EXPERT WITNESS REPORT - 2 January 2012 REVISION

Kline v. Loman Auto Group, Victoria Morgan-Alcala, et al.

Page Range 245

Pages 361 - 605

FedEx Express
Customer Support Trace
3875 Airways Boulevard
Module H, 4th Floor
Memphis, TN 38116

U.S. Mail: PO Box 727
Memphis, TN 38194-4643

Telephone: 901-369-3600

February 11,2011

Dear Customer:

The following is the proof-of-delivery for tracking number **869667283908**.

Delivery Information:

Status:	Delivered	**Delivered to:**	Receptionist/Front Desk
Signed for by:	T.MAPP	**Delivery location:**	1200 N.J. AVE SE W41 306 20590
Service type:	FedEx 2Day Box	**Delivery date:**	Feb 11, 2011 12:13

Shipping Information:

Tracking number:	869667283908	**Ship date:**	Feb 9, 2011
		Weight:	5.0 lbs/2.3 kg

Recipient:
MR DAVID STRICKLAND
NHTSA
1200 NEW JERSEY AVE SE W BLDG
20590 US

Shipper:
PAUL SHERIDAN
SHERIDAN, PAUL V
22357 COLUMBIA ST
481243431 US

Thank you for choosing FedEx Express.

FedEx Worldwide Customer Service
1.800.GoFedEx 1.800.463.3339

FedEx Express
Customer Support Trace
3875 Airways Boulevard
Module H, 4th Floor
Memphis, TN 38116

U.S. Mail: PO Box 727
Memphis, TN 38194-4643

Telephone: 901-369-3600

February 17,2011

Dear Customer:

The following is the proof-of-delivery for tracking number **794420349759**.

Delivery Information:

Status:	Delivered	**Delivered to:**	Shipping/Receiving
Signed for by:	.GEIGER	**Delivery location:**	255 ULMERSTR 70327 STUTTGART 70327
Service type:	Priority Box	**Delivery date:**	Feb 16, 2011 10:57

Shipping Information:

Tracking number:	794420349759	**Ship date:**	Feb 14, 2011
		Weight:	5.2 lbs/2.4 kg

Recipient:
DR. DIETER ZETSCHE
DAIMLER AG
CORPORATE HEADQUARTERS
MERCEDESSTR 137
STUTTGART 70327 DE

Shipper:
PAUL SHERIDAN
DDM
22357 COLUMBIA STREET
DEARBORN, MI 48124 US

Reference NHTSA PE10-031

Thank you for choosing FedEx Express.

FedEx Worldwide Customer Service
1.800.GoFedEx 1.800.463.3339

FedEx Express
Customer Support Trace
3875 Airways Boulevard
Module H, 4th Floor
Memphis, TN 38116

U.S. Mail: PO Box 727
Memphis, TN 38194-4643

Telephone: 901-369-3600

February 15,2011

Dear Customer:

The following is the proof-of-delivery for tracking number **869667283919**.

Delivery Information:

Status:	Delivered	**Delivered to:**	Shipping/Receiving
Signed for by:	S.WILLIAMS	**Delivery location:**	6330 COLUMBIA APRK RD 20510
Service type:	Express Saver Pak	**Delivery date:**	Feb 15, 2011 10:04

Shipping Information:

Tracking number:	869667283919	**Ship date:**	Feb 11, 2011
		Weight:	5.0 lbs/2.3 kg

Recipient:
SEN JOHN ROCKEFELLER
U S SENATE
531 HART SOB
20510 US

Shipper:
PAUL SHERIDAN
SHERIDAN, PAUL V
22357 COLUMBIA ST
481243431 US

Reference PE10-031

Thank you for choosing FedEx Express.

FedEx Worldwide Customer Service
1.800.GoFedEx 1.800.463.3339

To: Mr. David L. Strickland *
NHTSA Headquarters
West Building
1200 New Jersey Avenue, SE
Washington, DC 20590
888-327-4236

Date: 9 February 2011 VIA FEDEX 8696-6728-3908

From: Mr. Paul V. Sheridan
DDM Consultants
22357 Columbia Street
Dearborn, MI 48124-3431
313-277-5095
pvs6@Cornell.edu

Reference : NHTSA Action Number PE10031 – File Update
(Jeep Grand Cherokee Fuel System Crashworthiness Defect Investigation)

Courtesy Copy List

Ms. Angel M. DeFilippo **
Grieco Oates & DeFilippo, LLC
414 Eagle Rock Avenue
West Orange, NJ 07052
973-243-2099

Mr. Courtney E. Morgan, Jr. **
Morgan & Meyers, PLLC / Suite 320
3200 Greenfield Road
Dearborn, MI 48120
313-961-0130

Mr. Clarence Ditlow, Director **
Center for Auto Safety
Suite 330
1825 Connecticut Ave, NW
Washington, DC 20009-5708
(202) 328-7700

Senator John Rockefeller IV ***
Commerce, Science and Transportation Committee
531 Hart Senate Office Building
Washington, DC 20510
(202) 224-6472

Dr. Dieter Zetsche ****
Chairman of the Board of Management
Daimler AG
Corporate Headquarters
Mercedesstr. 137
70327 Stuttgart, Germany
011-49-711-17-0

Mr. Lawrence Hershman **
NHTSA Headquarters
West Building
1200 New Jersey Avenue, SE
Washington, DC 20590
888-327-4236

* *Available with hyperlinks here:* http://links.veronicachapman.com/Sheridan2Strickland-1.pdf
** *By email.*
*** *Via FedEx 8696-6728-3919*
**** *Via FedEx 7944-2034-9759*

DDM Consultants
22357 Columbia Street
Dearborn, MI 48124-3431
313-277-5095

9 February 2011 VIA FEDEX AIRBILL # 8696-6728-3908

Mr. David L. Strickland, Administrator
NHTSA Headquarters
1200 New Jersey Avenue, SE
Washington, DC 20590
888-327-4236

Reference : NHTSA Action Number PE10031 – File Update
(Jeep Grand Cherokee Fuel System Crashworthiness Defect Investigation)

Dear Mr. Strickland:

I am writing to share with you my perspective, and the concerns I have regarding PE10031. These are qualified by experience-with and ongoing knowledge-of the defect investigation process/history of the National Highway Traffic Safety Administration (NHTSA).[A] My perspective is partially documented by the enclosures. My concerns and related requests relative to the reference are also offered.

Enclosure 1

My Letter/Binder of 27 October 1999 to Attorney General Janet Reno, Subject: Department of Justice Assistance to Special Interests – Chrysler Corporation: FOIA Lawsuits and the NHTSA Defect Investigation Conspiracy

The setting of this enclosure is a defect investigation (EA94-005) conducted by NHTSA regarding a safety standard that was deemed ineffective in the real world. FMVSS-206 did not and could not protect occupants during minor collisions in minivans. Enclosure 1 documents NHTSA cooperation with Chrysler Corporation which ensured that crash test results would not be made public under the ruse of an "ongoing investigation" (which in-truth had concluded during a secret NHTSA/Chrysler meeting of November 17, 1994).[B] I also detail the number of injuries/fatalities that were inflicted upon minivan passengers during NHTSA's "ongoing investigation." The essence of the ruse, and confirmation of the agency's direct participation, is presented under the colored tab. Please note that former Chrysler Vice Chairman Robert A. Lutz and former Chrysler Chairman Robert J. Eaton both confirmed these basic facts while under-oath.

During the NHTSA/Chrysler ruse, I was falsely accused of wrong-doing by Chrysler defense attorneys, fired on that basis during Christmas holidays, and sued in a Michigan court session, all *ex parte*, in late December 1994. However, completely unaware of NHTSA's conduct and perhaps naively, it was during this period that I was attempting to inform the agency of my concerns regarding the very same "safety defect" that was secretly presented/quoted as-such to Chrysler.[C]

Enclosure 2

Gala reception invitation of March 2002, provided by Washington-based product liability defense firm Hogan & Hartson L.L.P., held for former Chrysler product liability defense lawyer, and then recently appointed Chief Counsel of NHTSA, Ms. Jacqueline Glassman.

The taxpayer is not aware of the practice of selected NHTSA officials attending gala celebrations which are funded by auto companies and/or their defense counsel. Given that influence-upon or corruption-of the overall regulatory process by special interests remains a major political/social issue, it is reasonable for the taxpayer to assume that their real world safety interests are not prioritized. [D]

To the best of my knowledge no plaintiffs or plaintiffs' law firms have offered or funded similar galas for high-level NHTSA officials. To the best of my knowledge no auto company, other than Chrysler/DaimlerChrysler, has offered and funded a similar gala for a high-level NHTSA official. [E]

Enclosure 3

Eight-minute excerpt (DVD) of deposition testimony of former Chrysler Executive Vice President of Engineering and Jeep Products Executive, Mr. Francois J. Castaing, in the Jeep crashworthiness litigation of Tenaglia versus Chrysler Corporation, March 14, 1996.

Chrysler Corporation acquired American Motors in 1987. The specific theme of that transaction, per Chairman Lee A. Iacocca, was acquisition of the Jeep product line. Executive management approved the new Jeep Grand Cherokee program (ZJ-Body), with a planned introduction for model-year 1993. [F]

In September 1987 I was promoted from Dodge Truck Operations into Jeep & Truck Engineering (JTE). I worked at JTE until January 1991 when I was assigned to Minivan Operations. During this four-year period I attended, as participant and presenter, numerous 'Engineering Program Review' meetings (EPR) where both Dodge truck and Jeep products were discussed. EPRs were held by direction-of JTE Vice President, Mr. Francois Castaing. He later assumed the position of Executive Vice President of Engineering, and became the Jeep Products Executive.[G] As Executive VP of Engineering, Mr. Castaing was also a key participant in the discussions of Enclosure 1. [H]

Enclosure 3 highlights examination by plaintiff attorney Mr. Larry Coben regarding Mr. Castaing's engineering knowledge of Jeep product crashworthiness:

Coben:	*What does the term crashworthiness mean in terms of design of a product?*
Castaing:	*I don't know. Tell me.*
Coben:	*You don't know the phrase?!*
Castaing:	*No.*
Coben:	*Well, let me make sure I'm clear on this. As the chief engineer of the company, are you at all familiar with the use of the phrase crashworthiness by the engineers of the company?*
Castaing:	*Crashworthiness is so vague that you have to tell me what you intend by that.*

It should be emphasized that by the time of this sworn testimony Mr. Castaing was Executive Vice President of Engineering, and Product Executive responsible for all aspects of the Jeep product. Enclosure 3 should be viewed in the context of its historical and general implications for PE10031.

Concern 1

During our introduction at the Russell Senate Office Building in May 2010, prior to your testimony before Senate Commerce Chairman John Rockefeller, I discussed and you cordially agreed to receive documents that would assist NHTSA with DP09005. Of particular interest/relevance was the internal Chrysler letter referred to as the "Baker memo." This August 24, 1978 memo states in-part:

" Chrysler is investigating fuel tank relocation ahead of the rear wheels for vans and multipurpose vehicles, but present plans for pickups through 1983 and for MPV's and vans through 1985 have the fuel tank located behind the rear wheels. In vehicles both with and without bumpers there is a concern with vertical height differences that create a mismatch with passenger car bumpers. Where fuel tank location behind the rear axle is all that is feasible, a protective impact deflection structure may have to be provided whether or not a bumper is provided. An investigation whether to relocate the fuel tank or to provide impact deflecting structures is presently underway. "

I had forwarded this material under cover of 1 June 2010 to Mr. Clarence Ditlow, Director at the Center for Auto Safety (CAS). This material was received by your office on 4 June 2010. My concern involves the fact that this material was only-recently entered into the public file, and only at the prompting of Mr. Ditlow. I am unsure why this part of the investigation process took nearly one year (Enclosure 4).

Concern 2

Although I agree with your decision to elevate DP09005 to the referenced preliminary evaluation, I am concerned with some historically familiar NHTSA rhetoric. Upon opening a defect investigation NHTSA typically pursues "preliminary examination of available data."

In contrast, as chairman of the Chrysler Safety Leadership Team (SLT), my priority involved Failure Mode Effects Analysis (FMEA) as the basis of preliminary and ongoing examination of a safety concern. In my role it did not matter that only one person may be affected during vehicle service life. What mattered was that a failure mode existed, and when provoked would cause serious harm. Hypothetically, the fact that a vehicle service life was statistically "lucky," and a failure mode was provoked "only once," was <u>not</u> gala. Such an approach would merely confirm incompetence as a safety manager. [I]

For perspective, I have testified in litigation wherein defense counsel has deployed two themes: 1) "compliance with all government safety standards" and 2) various NHTSA statistics. However, when the jury in Jimenez v Chrysler learned of the latter's foreknowledge that FMVSS-206 failed to address the failure mode that was responsible for the death of an 8-year-old boy, that standard and related NHTSA statistics were rendered legally and morally worthless. [J] Similarly, when the jury in Flax v Chrysler learned that FMVSS-207 did not address the failure mode that was responsible for the death of an infant, that standard and related statistics were deemed irrelevant. [K]

Regarding PE10031, it appears that NHTSA is evoking FMVSS-301 and various statistics. It further appears that the agency is misrepresenting the FMEA in question when in declares that CAS has "defined . . . vehicle being struck at the 5, 6 or 7 o'clock positions." This error needs to be clarified. A central part of the FMEA that we have long-defined, and one that FMVSS-301 has never addressed, is the issue of <u>collision underride</u>: Specifically, this failure mode involves direct collision impact with the unprotected Jeep Grand Cherokee fuel tank and associated components. In no uncertain terms, and despite compliance with FMVSS-301, the "Baker memo" confirms Chrysler foreknowledge of this direct collision impact issue via its "impact deflection structure" and "vertical height differences" verbiage. [L]

Concern 3

I was shocked to learn that only four original equipment manufacturers (OEM) were solicited for comment under PE10031. The most relevant OEM was not included: Daimler AG. This error is serious.

The 1993 ZJ-Body formed the engineering basis of the 1999 to 2004 WJ-Body Jeep Grand Cherokee. [M] However, the WJ-Body was tooled prior to the 1998 "merger" of Daimler-Benz and Chrysler. This timing obviated the feasibility that the fuel system crashworthiness defect issue could be rectified by Daimler-Benz engineers. The WK-Body program was approved by post-merger DaimlerChrysler in late 2000.

The earliest post-merger timing which allowed for Daimler-Benz engineering design practices to correct the original fuel system crashworthiness defect issue of the ZJ-Body occurred with the 2005 WK-Body. At the time of the "merger," it was recognized that none of the decades-old Mercedes-Benz SUV vehicles located an unprotected fuel tank behind the rear axle and below the bumper. [N] Mercedes-Benz M-Class SUVs are well-known examples. Daimler-Benz engineering design inputs and commonized components with the Grand Cherokee are also boasted in Jeep media reviews and technical journals. [O]

NHTSA data confirms that since introduction of the Daimler-Benz influenced WK-Body, no fuel system related deaths have occurred. In my opinion, this is typical of the results we can expect from a "real world" approach to engineering design. It is well-known that the 2005 WK-Body and 2011 WL-Body Jeep Grand Cherokee fuel system design occurred as a direct result of Daimler influence. On this basis alone it is a serious error, if not an outright breach of the public trust, that PE10031 has not yet solicited the comments of the very managerial and engineering personnel who are directly responsible for this laudable real world 'zero deaths' statistic.

Requests (4)

1) I hereby request that NHTSA PE10031 openly solicit comments from Daimler AG. 2) Please update the PE10031 file to correctly reflect Fiat S.p.A. as the "manufacturer" of the 1993 to 1998 ZJ-Body and the 1999 to 2004 WJ-Body Jeep Grand Cherokee vehicles. 3) Please add this letter and all enclosures to the PE10031 public file. 4) Please feel free to contact me at any time.

Respectfully yours,

Paul V. Sheridan

Enclosures (4)

Endnotes

[A] Some of this discussion will be new/unknown to you, and intrinsically unassociated with your good efforts.

[B] Please review Tab 4 of Enclosure 1.

[C] Please review Tabs 15 and 27 of Enclosure 1.

[D] For an introduction to the impression my safety priorities made please see Tab 27 of Enclosure 1.

[E] To the best of my knowledge Enclosure 2 was arranged in-part by former internal Chrysler Corporation lead product liability attorney Mr. Lewis H. Goldfarb (Please see Page 2-of-10 and Tab 16 of Enclosure 1).

[F] Formal ZJ-Body program approval occurred at the Product Planning Committee in late 1987.

[G] Please see Tab 20 of Enclosure 1.

[H] Please review Tabs 14 and 16 of Enclosure 1.

[I] A dramatic demonstration of the validity of the FMEA prioritization approach occurred on the morning of Tuesday, January 28, 1986.

[J] Please see Tab 12 of Enclosure 1.

[K] Please see Page 6-of-10 and Tab 21 of Enclosure 1.

[L] In at least one prior fuel system defect investigation, NHTSA has been made fully aware of the inherent dangers of direct collision impact with an unprotected fuel tank and associated components. The automotive insurance industry also recognizes the underride collision event, showing this event in several television advertisements.

[M] Proclamations about the "numbers of new parts" comprising the "all new" WJ-Body in-fact relate primarily to cosmetic revisions and as-such have no relevance to the referenced discussion which focuses on the placement and resulting/ongoing defective crash performance of the ZJ/WJ fuel system.

[N] During 2009, Chrysler statements alleged that the re-positioning/re-engineering of the 2005 WK-Body Jeep Grand Cherokee fuel tank (forward of the rear axle and shielded by an "impact deflecting structure) occurred to accommodate "interior luggage space." On several levels this is absurd, especially when reviewing the well-known fact that a 1980's version of the Jeep platform had already moved the fuel tank forward of the axle, and "interior luggage space" was not a consideration for that re-positioning. At the time of the MJ-Body, the primary justification for the re-positioning was ease of access to the spare tire.

[O] Recent 2011 WL-Body Jeep Grand Cherokee television advertisements ostensibly declare the importance of "impact deflection structure," referred to in the ad as a skid plate. Such has been standard equipment on Mercedes-Benz SUV vehicles for decades.

ENCLOSURE ONE

22357 Columbia Street
Dearborn, MI 48124-3431
313-277-5095

27 October 1999

Honorable Janet Reno
Attorney General of the United States
Department of Justice - Room 4545
950 Pennsylvania Avenue
Washington, D. C. 20530-0001

Subject : Department of Justice Assistance to Special Interests - Chrysler Corporation : FOIA Lawsuits and NHTSA Defect Investigation Conspiracy

Dear Madam Attorney General :

I am currently the defendant in the largest damages claim against an individual citizen in the history of our nation : **$82 million** (Tab 1). The original lawsuit was filed *ex parte* by Chrysler Corporation during Christmas 1994. Aware that I was never notified of the December 27th hearing, and had no legal counsel present; Judge Hilda Gage of Michigan's Oakland Circuit court issued a "muzzle order" against me. The damages portion involves my March 1995 interview with *ABC News 20/20*, and my statements regarding the defective Chrysler minivan liftgate latch. Chrysler lawyer Steven Hantler exclaimed :

"We may ask for more . . ."

President of the Michigan Bar, Thomas Kienbaum, the lawyer who filed the damages claim, refuses to comment publically. The implicit purpose of this $82 million claim is the intimidation of any employee whose opinion(s) and action(s) regarding safety defects is opposed by Chrysler management. The theme of intimidation is repeated throughout this discussion (Tab 2) .

THE NHTSA DEFECT INVESTIGATION AND THE FRAUDULENT "NON - RECALL"

In September 1993 NHTSA opened an investigation into the Chrysler minivan liftgate latch (PE93-084). This occurred only after a highly visible accident in Virginia. By January 1994 NHTSA escalated their inquiry to a engineering analysis (EA94-005). On November 17, 1994 a secret meeting was held in Washington between Chrysler and NHTSA where the EA94-005 conclusion was presented (Tab 3) :

"The latch failure is a safety defect that involves children."

On March 27, 1995 Chrysler held a "Service Action" press conference. It was announced that 1984 to 1994 minivan liftgate latches could be replaced (Tab 4). International customers were not notified or offered the same service. Bud Liebler of public relations emphasized the following rhetoric :

"Remember, NHTSA has not determined that there is a defect."

Chrysler executives Chris Theodore, Dale Dawkins, Lewis Goldfarb and Chief Counsel William O'Brien were in attendance. This event, and the Liebler statement, were covered by innumerable media outlets.

Shortly thereafter, sales executive Ted Cunningham sent a letter to four million minivan owners. His letter announced the existence of the Chrysler minivan hotline (Tab 5). The letter was <u>not</u> sent to International minivan owners, nor was an international hotline established. Cunningham reiterated :

"There has been no formal determination that a safety defect exists with minivan latches."

However, by September 1995 NHTSA was compelled to ostensibly feign ignorance, and deny knowledge of these widely publicized Chrysler pronouncements. NHTSA's denial occurred only after exposure of the blatant falsehoods being communicated by hotline operators (Tab 6). The falsehoods were presented on national television. Both Chrysler and NHTSA refused to be interviewed by *A Current Affair*. (Tab 7).

At the March 27, 1995 Service Action press conference the following exchange took place:

Question : *"Does the NHTSA investigation still officially **remain open** pending this **non-recall**?!"*

Goldfarb : *"The investigation does continue to **remain open** so that they (NHTSA) can monitor the response rate that we get to the contacts with owners, as well as our PR campaign."*

Question : *"What response rate do you have to attain for NHTSA to be satisfied?"*

Goldfarb : *"We don't have a specific rate in mind. This is a very unusual campaign."*

I agree with Goldfarb's assessment, *"This is a very unusual campaign"*. In late 1995 Goldfarb declared that the service action was non-binding; stating that Chrysler was "free to discontinue" at any time (Tab 4). However, on March 28, 1995 I gave a second interview with *ABC News 20/20*. I declared Chrysler's so-called Service Action, not just "unusual", but an outright fraud. My primary basis was that the proposed replacement latches would not, and have not corrected the safety defect. I also charged that the replacement latches had not been funded or manufactured; therefore none were available for the "campaign". In the epilogue of the October 27, 1995 <u>airing</u> of *20/20*, reporter Jim Walker explained to anchor Hugh Downs :

"But I must tell you, we called around to some dealerships today which (still) don't have them."

It would take a full year thereafter (September 1996) before latches finally became available for all (Tab 8).

The notion implied by Goldfarb, that a government investigation needs to exist so that someone can "monitor the response rate" is preposterous. Data collection systems, such as those run by automobile companies for quality or warranty, have been in place <u>for decades</u>. As detailed below, the "open" status was part of a secret Chrysler/NHTSA agreement; a ruse specifically deployed to thwart FOIA requests.

<u>FREEDOM OF INFORMATION ACT (FOIA) REQUESTS DENIED</u>

Chrysler originally proclaimed that the EA94-005 tests were "flawed" (Tab 9). In response, Ralph Hoar and accident victims filed FOIA requests with NHTSA. Eventually Hoar filed a lawsuit which contested NHTSA's refusal to comply. Chrysler filed numerous briefs in vigorous support of the NHTSA refusal. The stated FOIA refusal rationale was that the NHTSA defect investigation was "open".

By August 1995 the court compelled NHTSA to release the EA94-005 materials to the public (Tab 10). The release occurred on October 25, 1995. The documents proved that NHTSA had originally intended to declare the Chrysler latch a "safety defect", and therefore alert the public of a genuine safety recall. A defect status was my well-known opinion for the three years prior to my *ex parte* dismissal of December 19, 1994. Chrysler management was aware of my various contacts with NHTSA during that period. On December 16, 1994 I confirmed with Chrysler my intention to report minivan safety defect concerns to NHTSA. Chrysler Security then raided my office *ex parte,* and confiscated eleven years of file materials. As of this writing, even my personal property has not been returned (Tab 11).

THE *EX PARTE* MICHIGAN MUZZLE ORDER - THE CRUCIAL ONE-YEAR PERIOD

During the one year period between 1) the secret Chrysler/NHTSA meeting of November 17, 1994, 2) the issuance of the *ex parte* "muzzle order" against me, and 3) the court-ordered release of EA94-005 materials on October 25, 1995, **at least ten additional deaths and severe injuries occurred that have been directly attributed to the latch defect.** Both American and Canadian children were involved. Several of these tragedies were presented by *ABC News 20/20*. Again, like their behavior on *A Current Affair,* both Chrysler and NHTSA refused to be interviewed for the *20/20* program (Tab 8).

EVIDENCE OF CONSPIRACY : INTIMIDATION OF NHTSA BY CONGRESS

Over the last five years, scores of lawsuits involving the defective latch have been lost or settled by Chrysler. My testimony was central to one of the largest verdicts levied against an auto manufacturer in history : **$262.5 million** (Tab 12). Shocking evidence was disclosed at this September 1997 federal trial in South Carolina. Since, Chrysler has declined to defend themselves in open court on the latch defect issue.

The January 7, 1998 *CBS News* program *Eye-On-America* presented aspects of the $262 million verdict; highlighting the deposition of Chrysler chairman Robert Eaton (Tab 13). New evidence proved that close contact between Eaton/Chrysler and two Congressmen took place during the crucial one year period described above.

John Dingell (D-MI) and Mike Oxley (R-OH) were part of the Chrysler plan to intimidate NHTSA. These congressmen, who share NHTSA budgetary oversight, sought to subvert the agency's intention to announce the latch a "safety defect". Their January 17, 1995 letter to NHTSA Administrator Martinez feigns concern over an investigation involving a non-Chrysler product; that GM investigation was long-closed (Tab 14). *CBS News* interviewed Deputy Administrator Phil Recht regarding the true intent of the Dingell/Oxley letter. Recht refused to confirm the internal NHTSA interpretation. **But we have now confirmed in *my* lawsuit that the Dingell/Oxley letter was understood by NHTSA to be one of willful intimidation regarding public disclosure of the EA94-005 *conclusion;* as presented to Chrysler on November 17, 1994** (Tab 15). Dingell, Oxley and Chrysler all refused to be interviewed.

CBS News requested an interview but I declined; due to an upcoming Chrysler latch failure death case in Los Angeles. Chrysler settled the Ornelas case in March 1998. However, what was not presented by *CBS News* was that **the Department of Justice was also central to the conspiracy to conceal the EA94-005 conclusion** during 'The *Ex Parte* Michigan Muzzle Order - The Crucial One-Year Period'.

EVIDENCE OF CONSPIRACY : CONCEALMENT SUPPORTED BY THE **DEPARTMENT OF JUSTICE**

The August 28, 1997 deposition of Eaton demonstrated that my *ex parte* dismissal from Chrysler was essential to a "business as usual" scheme; executed by the highest levels of Chrysler management and their legal counsel. It was a scheme based on arrogance, ignorance and a disregard of the laws of the United States. Below I present how I attempted to remedy this archaic attitude, as it related to the safety of minivan customers. My efforts involved creation of the minivan Safety Leadership Team (SLT). I was aware of the internal political risks. But I how could I have anticipated the behavior of the **Department of Justice?**

On page 104 of the Eaton deposition, Exhibit 21 is reviewed (Colored Tab). Plaintiff lawyers John Gerstein and Mikal Watts pose a simple question to Eaton (Tab 16) :

Q : *"In paragraph one, you got NHTSA to agree that they would deny all Freedom of Information Act requests to place their investigative files including the [EA94-005] crash test video in the public record* ***and that the Justice Department would defend any lawsuits seeking to compel production under the Freedom of Information Act; is that correct?*** *"*

Eaton confirms his awareness of the conversations between Chrysler and the **Department of Justice** :

A : *"That was while the investigation was going on, I assume. Obviously they were ultimately released, so there wasn't - you know, I don't know."*

Q : *"I think there was a lawsuit to get them!"*

Note that Eaton emphasizes "while the investigation was going on". The ruse which declared that EA94-005 remained "open" as a basis for the FOIA denials, was known to, and supported by the **Department of Justice**. At no time did Chrysler declare that the NHTSA crash test information was a "trade secret". (The lawsuit refers to the Hoar case mentioned on page 2 above.)

On June 4, 1999 my attorney, Courtney Morgan, conducted the Robert Lutz deposition. Lutz was vice chairman of Chrysler, reporting directly to Eaton. Lutz confirms that he too was aware of the conspiracy with the **Department of Justice** to thwart the FOIA lawsuits (Tab 17).

The moral significance of this conspiracy was fully understood by the jury in South Carolina (Tab 12). For example, paragraph 3 of Eaton deposition Exhibit 21 and Lutz Exhibit #3 declares :

"The Department of Justice says there is less than a 50/50 chance of keeping the video off the record for the full duration of the investigation, i.e. the campaign, if there is a court ruling. Given the possibility that a lawsuit could be filed at any time, they anticipate that the legal process would take at least four months, regardless of the outcome." (Colored Tab)

It is clear that elaborate exchanges took place between Chrysler, NHTSA, and the **Department of Justice**. At no time has any witness, in any case related to these matters, denied that these exchanges took place.

The subject of these exchanges was the joint Chrysler/NHTSA/DOJ conspiracy to keep the EA94-005 investigation files obscured from the public. The scheme between Chrysler and your Department was not offered into evidence at the Hoar FOIA case. This covert activity by the **Department of Justice** is the opposite of what was begun with the minivan Safety Leadership Team (SLT).

THE CHRYSLER MINIVAN SAFETY LEADERSHIP TEAM - THE FIRST OF ITS KIND

At the close of 1991, my boss Richard Winter wrote into my performance appraisal :

> *"Very good at bringing forward new concepts and technology that could lead to competitive advantage . . . Very good at monitoring safety and regulatory needs."*

My aptitude for automobile safety was well-known long before I conceptualized the SLT (Tab 18). I deemed the SLT necessary as a result of at least three events in the minivan market during 1992. These events exposed the archaic but pervasive management/government attitude toward safety :

1) In June 1992, two infants were ejected from a Chrysler minivan after the liftgate latch failed. Both infants died. The other passengers, which remained inside the minivan, survived. This accident occurred in Mount Pleasant, Michigan (Tab 19). The Hartshorne case was settled on the very same day that Oakland Circuit Court issued their *ex parte* muzzle order against me : December 27, 1994.

2) In September 1992, George Baird was killed during an accident in Virginia. In what would otherwise have been a survivable accident, his Chrysler minivan seat failed during a rear end collision. Baird then lost vehicle control, and was killed. I later testified in the Baird case which Chrysler settled for several million dollars.

3) It became increasingly obvious during 1992 that competitive activity in minivan safety was a threat to Chrysler's safety leadership claims. This was especially true with respect to the Ford Windstar.

Tom Gale, vice president-minivan, appointed me as chairman of the SLT in December 1992 (Tab 20). The SLT was comprised of mostly engineers, and also included representatives from sales, marketing, consumer research, manufacturing, competitive information, government affairs, product planning, finance, et al. There were fifteen highly qualified members. Our main concern was the safety and well-being of minivan owners and passengers.

I also conceived the SLT in the 'team format' for the explicit purpose of usurping the "business as usual" approach to safety. **This archaic attitude denigrates safety to court room ruses, government regulatory bureaucracy, or the motivations and unsubstantiated opinions of executives; supported and eventually defended by their sycophantic lawyers.** My motivation was to elevate management of the safety issue to a broad-based expertise and consensus. In retrospect, this was a bold and somewhat naive endeavor; given the entrenched and powerful constituencies of the "business as usual" approach. With these and other aspects of our SLT mission well-understood, it was my task as chairman to determine how to re-establish and maintain true leadership.

THE SLT ENDORSES THE **REAL WORLD** ALA MERCEDES - BENZ

In March 1993 I played a *CBS News 60 Minutes* video tape at an SLT meeting (Tab 21). The *60 Minutes* program depicted the attitude that NHTSA and most automobile companies had with respect to safety. NHTSA, and those auto companies which were/are the defendants in numerous (seat failure) lawsuits, refused to be interviewed for the *60 Minutes* program . . . the prominent exception was Mercedes-Benz.

Dr. Tom Bologa of Mercedes-Benz safety engineering was interviewed by reporter Ed Bradley about their approach to safety. Dr. Bologa explains :

> *"Mercedes-Benz tests with the weight of a person in the seat . . . To simulate what's going on in the* ***real world.***"

The SLT unanimously endorsed using the "real world" as a starting point in our mission to provide true safety leadership. The SLT, like most working-level staff, made compelling observations. For example :

1. There was nothing "real world" in the fact that after the Hartshorne infants were killed, Chrysler did no (crash) testing whatsoever to determine if the liftgate latch was adequate. Indeed, subsequent to this accident, we were directed not to document any SLT discussions/recommendations regarding the liftgate latch defect. There was nothing "real world" in the legal ruse that NHTSA did not (then) require a safety standard for the minivan liftgate, despite a 1990 petition : PE90-079 (Tab 22).

2. There was nothing "real world" about not adding approximately $5.00 to the seat hardware, which would have kept George Baird alive. There was nothing "real world" about seat standard FMVSS-207 which NHTSA officials had openly admitted was inadequate.

3. There was nothing "real world" about crashworthiness standards such as FMVSS-208 which encourage air bag deployment force levels that protect adult male dummies in a compliance test, but decapitates children or smaller women during a parking lot bump (Tab 23).

4. There was nothing "real world" about completely ignoring what is called 'offset', despite knowing that it was a statistically significant crash mode, and as such is required in Europe (Tab 24).

5. There was nothing "real world" about Chrysler's testing for side crash standards (FMVSS-214) without "fuel" in the test vehicle gas tank! NHTSA has now escalated their investigation of the resulting safety defect on the 1996 through 1999 Chrysler minivans under EA99-013 (Please see "BLATANT DUPLICITY OR LESSONS LEARNED ?" discussion under Tab 25).

The SLT unanimously agreed with the attitude demonstrated by Mercedes-Benz. I published meeting minutes that summarized the strong SLT reaction to the *60 Minutes* program; especially the "real world" approach to safety leadership. As usual, these minutes were distributed to upper Chrysler management. Within days I was told that Francois Castaing, executive vice president of engineering, was "livid". Castaing ordered that I "retrieve and destroy" the minutes. I retrieved the minutes but retained two copies in my SLT file. However, Judge David Breck of Oakland Circuit Court has recently ordered that discovery regarding the whereabouts of these and many other file documents are **banned** from my lawsuit against Chrysler (Tabs 11 & 26).

The "retrieve and destroy" directive and other malicious management directives were endured during the two years of SLT existence; rendering our efforts and recommendations unheeded. Mere weeks prior to the Chrysler raid of my office, Ron Zarowitz of Government Affairs hand-wrote the following 1993/1994 performance appraisal comment (Tab 27):

> *"Paul (Sheridan) does a thorough, detailed, organized, and tireless job. He became an active promoter of advancing safety in the (minivan) program* ***only slowing when the reality of the interest from management became apparent to him."***

Top management permanently disbanded the SLT on November 7, 1994 (Tab 28). It appeared that our work would end; never to be heard of again. I did not anticipate that my position as chairman of the SLT would eventually become a discussion item for the highest court in the United States.

UNITED STATES SUPREME COURT CASE #96-653 : PAUL SHERIDAN, KEN STARR ET AL.

In March 1997 I was contacted by associates of Professor Lawrence Tribe. Tribe is the Constitutional law professor at Harvard University. His Massachusetts and Washington associates had been introduced to my person/case by the *ABC News 20/20* program (Tab 8).

USSC case #96-653 involved the notion that a Michigan state court could assist corporate suitors when the latter sought to deny a plaintiff's access to testimony/evidence for product liability cases; despite when such lawsuits are filed in non-Michigan federal courts (?). **Ken Starr of Whitewater ilk** had been retained by defendant General Motors. Starr essentially argued that testimony involving the safety and well-being of taxpayers should not be subject to "full disclosure". Many felt this demonstrated Starr's blatant duplicity. For example, in the Clinton/Lewinsky sexual matter he demanded the exact opposite : complete disclosure.

Arguments were heard on October 17, 1997. On January 13, 1998 the Supreme Court ruled unanimously against Starr and his corporate client(s). When asked by the *Detroit News* for public comment, I tried to emphasize a subtle theme of my Safety Leadership Team (SLT) concept (Tab 29) :

> *"In the long run, eliminating the muzzle order (legal) option will ultimately reduce product liability litigation by ensuring that safety is prioritized."*

The SLT concept, which predated this ruling by over five years, demanded the opposite of that argued by Starr. The Chrysler/NHTSA/DOJ conspiracy to deny public access to the November 1994 conclusion of EA94-005, during 'the crucial one-year period' is even more abhorrent (see page 3 above). In this context, let us review **just one** example of the "real world" implication(s) of this conspiracy.

THE BRANDON AUER DEATH CASE - A LESSON FROM THE **REAL WORLD**

In early September 1995, the Auer family was driving their Chrysler minivan on a familiar Illinois road. The other driver ran a stop sign, and collided with the Auer minivan. Mr. and Mrs. Auer were in the front seats; their doors did not open, and they walked away from the accident. Alex was in the middle seat; his door did not open, and he walked away from the accident.

Nine-year-old Brandon was in the rear seat. He was wearing seat belts. During the accident the latch failed and the liftgate opened. Brandon and the minivan seat were both ejected through the liftgate opening. Brandon did not walk away from the accident. **Brandon was pronounced dead at the scene.**

At the time of this accident, I was under an *ex parte* muzzle order issued in behalf of Chrysler by Michigan's Oakland Circuit Court. At the time of this accident, Chrysler and NHTSA were declaring that the EA94-005 liftgate latch defect investigation was "open" , and therefore citizens such as the Auer family were not allowed to know the results of testing *that their taxes had funded.* Prior to and at the time of Brandon's death, agreements were in effect between Chrysler, NHTSA and the **Department of Justice,** as documented by the first paragraph of Eaton deposition exhibit #21, and Lutz exhibit #3 (Colored Tab) :

> ***"NHTSA has agreed that they will deny all FOIA requests to place their investigative files, including the [EA94-005] crash test videos, on the public record and that the Department of Justice will defend any lawsuits seeking to compel production under FOIA."***

I am confident that if the Auers had been allowed to view the real world crash test videos which were presented to Chrysler on November 17, 1994; that Brandon would be alive today. I am confident that if the Auers had known of my recommendations regarding minivan seats and liftgate latches, unfettered by Chrysler's *ex parte* muzzle order; that Brandon would be alive today. **I am confident that if the Auer family was aware of Eaton deposition exhibit #21 and Lutz deposition exhibit #3, prior to their September 1995 accident; that Brandon would be alive today.**

(Brandon's parents were interviewed for the October 27, 1995 airing of ABC News 20/20 ; see Bud Liebler December 8, 1995 letter to Brandon's elementary school teacher - Tab 8. Also review March 27, 1995 "Service Action" announcement made by Liebler - Page 1 above.)

PRODUCT LIABILITY "REFORM" : A VIEW FROM THE WHITE HOUSE

In mid-March 1996 I was telephoned by White House staff member Jim Dorskin. He announced that President Clinton was "deeply concerned" that an upcoming vote in Congress on a product liability reform bill might have enough support to be "veto proof ". Dorskin was requesting my availability for testifying before a Senate committee regarding my experiences with Chrysler. The portent of my testimony would have presumably supported opposition to the bill; at least to the extent that, if passed, President Clinton could still exercise his veto. Later I was chaperoned by Mike Fuller, and had conversations with Steve Nolet of the White House staff.

I made myself, and relevant public documents available for review by Dorskin/Fuller. I shipped these documents to the White House via Fedex on at least two occasions (Tab 30). Dorskin later exclaimed that he was very excited about my availability/testimony, and that I had been added to the list of witnesses. As I recall, the bill was not voted on, because the two-thirds support never materialized.

It is clear that President Clinton was, and is still opposes any government activity that directly or indirectly threatens the rights of individual American citizens, especially when these Constitutional rights have a demonstrated effect on their safety and well-being. The taxpayer has also heard Al Gore proclaim this **"pro consumer"** sentiment as intrinsic to his bid for the Democratic presidential nomination.

THE PUBLIC'S RIGHT-TO-KNOW

It is deeply ironic that I write this letter to a United States Attorney General that was twice nominated by a Democratic White House. Famously, and perhaps historically, it has been the Democratic Party that has proclaimed its commitment to 'The Public's Right-To-Know'. Nowhere had this political mandate been realized more profoundly than when Democratic President Jimmy Carter enacted the Freedom of Information Act (FOIA). **The primary beneficiary of FOIA is the common U.S. taxpayer.**

When I review the implications of the subject with common taxpayers, they are outraged. Indeed, I could present this and related (Chrysler minivan safety) subjects in more depth and breath than any other : As founding chairman of the minivan Safety Leadership Team (SLT), I was responsible for doing just that. However, additional evidence surrounding this subject only corroborates far greater offenses than what has been introduced above (Please see question VII below).

As their Attorney General, I believe that the public has the right-to-know your opinion(s), and your intended administrative response, to the subject. In this context I pose the following initial questions :

I. Do you believe in the First Amendment to the Constitution? Do you believe it protects my right as an American citizen to provide an interview to the media without the abuse-of-court process, and intentional intimidation exemplified by the Chrysler damages claim of $82,000,000 ? In this context, especially as it relates to limiting compensation awarded to injury/death plaintiffs; is it double-dealing when special interests like Chrysler vigorously lobby for "product liability reform" ?

II. Do you believe that automotive crash test information, which confirms the contemporaneous existence of a safety defect; whether it involves liftgate latches or crashworthiness, should be treated as a "trade secret" ? "Confidential" ? "Proprietary" ?

III. Do you believe that information such as that discussed in II should be obscured from the public under the guise of an "open investigation" , despite the fact that injury and death were **known** to be occurring, known to be involving children; **during the time the obscuring took place** ? Do you believe that information/conclusions such as that generated by NHTSA during 1994 under EA94-005 should be disclosed sooner rather than later, so that affected (Chrysler minivan) owners can make informed and timely decisions regarding their safety and well-being ? Please respond to this question in the context of the Brandon Auer tragedy discussed on page 7 above.

IV. In the context of public service, do you feel that it is proper behavior of U. S. Congressmen to assist special interests such as Chrysler Corporation with the intimidation of a safety regulatory agency such as NHTSA ?

V. Do you believe that a safety regulatory agency such as NHTSA should capitulate, under the legal and financial power of major automotive companies and their lobbying organizations; and enact safety standards that have little or no relevance to the "real world" ?

VI. Do you believe that an individual, that has direct knowledge and expertise regarding the existence of defective components (or practices) that are currently in the public domain; has the right and responsibility to inform the appropriate government agencies such as NHTSA of same, without the use/threat of professional, emotional, financial or physical harm ? *Ex Parte* lawsuits ? (Tab 31)

VII. Do you believe that individuals that commit acts of commission or omission of a wanton or willful nature, showing a reckless or indifferent disregard of the rights of others, under circumstances reasonably calculated to produce injury or death, or which make it not improbable that injury or death will be occasioned, and these individuals know or are charged with knowledge of the probable result of their acts; are culpable or criminal ?

VIII. Do you believe that it is a responsibility of the **Department of Justice** to provide legal assistance in civil lawsuits in behalf of special interests such as Chrysler Corporation, whether directly or indirectly (i.e. inter-agency protocol) , for the explicit purpose of obscuring vital safety information from the taxpayer; **information that is explicitly available under the Freedom of Information Act**; during a period of time that injury and death were known to be continually and predictably inflicted on innocent children ? Do you believe that legal assistance of this type is consistent with the call to "use government . . . to further the common good" ?

IX. Were you directly or indirectly aware that the conspiracy discussed above, and confirmed by Eaton and Lutz, and documented on Eaton deposition #21 and Lutz deposition exhibit #3, had in fact occurred between Chrysler, NHTSA and the **Department of Justice** ?

IT TAKES A VILLAGE : AND OTHER LESSONS CHILDREN TEACH US ??

In her book, First Lady Hillary Clinton proclaims :

> *"For the sake of our children, we ought to call an end to false debates between values and policies. Both personal and mutual responsibility are essential, and we should work to strengthen them at all levels of society. Let us admit that some government programs and personnel are efficient and effective, and others are not. Let us acknowledge that when it comes to the treatment of children, some individuals are evil, neglectful, or incompetent, but others are trying to do the best they can against daunting odds and deserve not our contempt but the help only we--through our government--can provide. Let us stop stereotyping government and individuals as absolute villains or absolute saviors, and recognize that each must be part of the solution.* ***Let us use government, as we have in the past, to further the common good."***

I am confident the First Lady would be appalled with the subject; and how related events destroyed the well-being of an Illinois family during the 'crucial one-year period' in 1995 (page 3). I am equally confident that "A Village" cannot be taught lessons from our children . . . if they are dead.

Sincerely and respectfully,

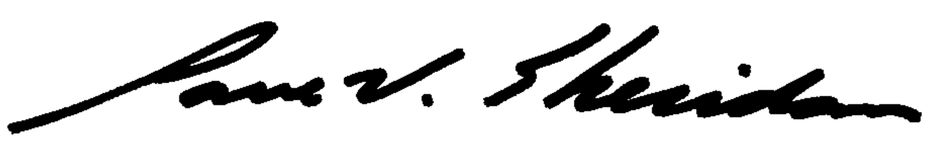

Paul V. Sheridan
Ex-chairman :
Chrysler minivan Safety Leadership Team

attachments

Chrysler Minivan Liftgate Latch Failures : Known Injury and Death Accidents *

THE *EX PARTE* MICHIGAN MUZZLE ORDER - THE CRUCIAL ONE-YEAR PERIOD

December 27, 1994
Oakland Circuit Court Issues Ex Parte Restraining Order Against Paul V. Sheridan

through

October 27, 1995
Date of Airing of ABC News 20/20 Program featuring Sheridan interview about latch*

Listed by Month in 1995:

January 1995

Ornelas v Chrysler ; Date of Accident : January 21, 1995
Lorena Casteneda, 2 years old, Killed
Diana Perez, 3 years old, Killed
Arecelas Casteneda, 20 year old man, Killed
Iscelas Ornelas, 21 year old woman, Killed

Pinkston v Chrysler ; Date of Accident : January 31, 1995
Jeff Pinkston, injury/death status TBD

Vega v Chrysler ; Date of Accident : January 1, 1995
Daniel Vega, injury/death status TBD

February 1995

Haas v Chrysler ; Date of Accident : February 6, 1995
Frank Haas, injury/death status TBD

March 1995

Bonnici v Chrysler ; Date of Accident : March 3, 1995 - Featured on Canadian News/TV
Thomas Bonnici, 5 year old boy, Killed

Woodard v Chrysler ; Date of Accident : March 11, 1995 - Featured on *ABC News Inside Edition*
Crystal Woodard, 8 year old girl, Killed
Tyndall Woodard, boy, serious injury
Sherri Lynn Woodard, girl, minor injury

Stewart v Chrysler ; Date of Accident : March 16, 1995
Michael Stewart, injury/death status TBD

March 1995 con't

Danish v Chrysler ; Date of Accident : March 17, 1995
Anjum Danish, injury/death status TBD

Vela v Chrysler ; Date of Accident : March 26, 1995
Maria Vela, injury/death status TBD

April 1995

None Admitted to by Chrysler

May 1995

Bordelon v Chrysler ; Date of Accident : May 8, 1995
Terry Bordelon, injury/death status TBD

June 1995

Ramjohn v Chrysler ; Date of Accident : June 5, 1995
J. Ramjohn, injury/death status TBD

Riley v Chrysler ; Date of Accident : June 25, 1995
Renada Riley, injury/death status TBD

July 1995

(Chrysler Files 'Contempt of Court' Allegation against Sheridan, Morgan and Mazur)

Zimmerer v Chrysler ; Date of Accident : July 2, 1995
Dylan Zimmerer, injury/death status TBD

Maxwell v Chrysler ; Date of Accident : July 4, 1995
Karle Maxwell, injury/death status TBD

Tatom v Chrysler & Prudhomme v Chrysler ; Date of Accident : July 16, 1995
Bernadine Tatom, girl, injury/death status TBD
Cynthia Prudhomme, girl, injury/death status TBD

Abercrombie v Chrysler ; Date of Accident : July 21, 1995 - Featured on ABC News 20/20*
Van Nguyen, woman, amputation of left arm
Mark Jones, 20 year old, serious injury
Tyler Hearndon, 7 year old boy, minor injury
Kim Nguyen, 30 year old woman, serious injury
Dao Nguyen, 70 year old woman, killed

July 1995 con't

Matthews v Chrysler ; Date of Accident : July 24, 1995
Stevie Weston, 14 year old girl, paraplegic

August 1995

Gross v Chrysler ; Date of Accident : August 12, 1995 (not listed on Eaton Exhibit #40)
Sandra Tate Gross, woman, killed
Tiffany Grady, woman, serious injury
Alica Gross, girl, serious injury
Cedric Gross, man, minor injury
Billy Ray Gross, Jr., man, minor injury

Yoo v Chrysler ; Date of Accident : August 24, 1995
Soo Ok Yoo, injury/death status TBD

September 1995

Auer v Chrysler ; Date of Accident : September, 4, 1995 - Featured on ABC New 20/20*
Brandon Auer, 8 year old boy, Killed

Duke v Chrysler ; Date of Accident : September 22, 1995
Lois Duke, girl, injury/death status TBD

Cockerel v Chrysler ; Date of Accident : September 24, 1995
K. M. Cockerel, injury/death status TBD

October 1995

Edwards v Chrysler ; Date of Accident : October 25, 1995
Chris Edwards, boy, injury/death status TBD

Hong v Chrysler ; Date of Accident : October 26, 1995
Sok Hong, unknown, injury/death status TBD

* Source : Chrysler submission to NHTSA.

Colored Tab

DEPOSITION EXHIBIT (R.A.LUT 2) #3 RAZ 6/4/99
PENGAD-Bayonne, N. J.

PRODUCED

MINIVAN LATCH ISSUE

Proposed Agreement with NHTSA

1. **Crash Test Video and the Public Record:**

- NHTSA has agreed that they will deny all FOIA requests to place their investigative files, including the crash test video, on the public record and that the Department of Justice will defend any lawsuits seeking to compel production under FOIA.

- We would agree with NHTSA that their engineering analysis will remain open while we conduct the service campaign to provide them additional bases to argue that release of the materials would interfere with their investigation.

- The Department of Justice says there is less than a 50/50 chance of keeping the video off the record for the full duration of the investigation, i.e. the campaign, if there is a court ruling. Given the possibility that a lawsuit could be filed at any time, they anticipate that the legal process would take at least four months, regardless of the outcome.

2. **Service Action Only - No Recall:** NHTSA has agreed that a Chrysler service campaign would fully satisfy all of their concerns and they would give full public support to such an effort. The critical elements that differentiate the service campaign from a recall (mostly reflected in the two attached letters) are as follows:

- no admission of defect or safety problem;

- stated purpose of the campaign - to ensure peace of mind in light of media coverage;

- campaign does not count as a NHTSA action - not included in NHTSA recall numbers, no Part 573 or Part 577 letters;

- statements to owners, the public and NHTSA assert that no defect has been found; and

- NHTSA acknowledges that replacement latch is not a 100% solution.

Eaton
EXHIBIT NO. 21
8-28-97
M. MOORE

DOCUMENT PRODUCED PURSUANT TO PROTECTIVE ORDER IN CHRYSLER

3. Chrysler Announcement: Chrysler controls publication of its action with the following provisions:

- Chrysler goes first with its own statement and reads approved NHTSA statement supporting Chrysler's action;

- Chrysler characterizes campaign as done solely to ensure the peace of mind of its owners, i.e. "your concern is our concern";

- Letter from Martinez to Chrysler and NHTSA press statement praise Chrysler action as fully satisfying all of NHTSA's concerns and state that Chrysler is a safety leader;

- NHTSA officials acknowledge publicly that there has been no finding of defect and that there will be none; and

- NHTSA officials acknowledge that owners should not be concerned over the delayed implementation of the action and that they can best protect themselves by keeping seat belts buckled at all times.

4. Additional Provisions: The following points have been requested by NHTSA and appear to be reasonable:

- The letter to owners makes reference to the NHTSA hot line phone number;

- Latch replacement will be offered as part of any routine minivan servicing (once replacement latches are available);

- Chrysler will submit six quarterly reports on the progress of the campaign (helps to support defense of FOIA requests); and

- NHTSA can make reference to the service campaign in response to owner inquiries.

DOCUMENT PRODUCED PURSUANT TO PROTECTIVE ORDER IN SUBJECT TO CHRYSLER

TAB 1

Advertising
Classifieds
Personals
Job listings
Model Homes
Place an ad

Essentials
Editorials
Horoscope
Lottery
Weather
Death Notices
CyberSurvey
Search Engine
Back Issues
Site highlights

News Sections
Accent
Autos
Business
Casino Guide
Comics
Comic Books
Cyberia
Food
Homestyle
Letters
Metro
Money
Movie Finder
Nation/World
Next!
Obituaries
Outlook
On Detroit
Pets
Rearview Mirror
Screens
Showtime
TV Listings
Voices

Sports Sections
Sports
Lions
Pistons
Tigers
Wings
College
U-M
MSU
State Colleges
High Schools
Motor Sports
Golf Guide

Chrysler sues former employee for $82 million in minivan affair

By Kenneth Cole / Detroit News Washington Bureau

Sheridan

WASHINGTON -- Chrysler Corp. is seeking $82 million from a former safety staffer-turned-whistleblower who's testifying in high-stakes lawsuits involving latch designs on the automaker's older minivans.

The demand, long kept secret, was disclosed in a just-settled rear liftgate latch lawsuit in Los Angeles.

The $82-million figure represents Chrysler's estimate of its losses following an October 1995 interview of Dearborn resident and former Chrysler employee Paul Sheridan on ABC-TV's 20/20 news program.

Legal experts say it may be the largest sum ever sought from a whistleblower by a corporation.

It is only one highlight of Ornelas vs. Chrysler, which was settled for an undisclosed amount this week in Los Angeles Superior Court. The case involved four passengers allegedly ejected from a Chrysler minivan in a low-speed crash in 1995.

"I don't track it, but I'd be surprised if an individual has ever been sued for more by a corporation," said Clarence Ditlow, executive director of the Center for Auto Safety in Washington, D.C. "It is reflective of how much a whistleblower can cost a company -- especially when it's tried to cover up a defect."

Tom Kienbaum, the Birmingham attorney representing Chrysler in its lawsuit against Sheridan, was not available for comment.

David Tyrrell, the company's lead counsel in the minivan-latch lawsuits, described Sheridan as "a disgruntled former employee."

Chrysler fired Sheridan in December 1994 for allegedly disseminating secret crash-test data on the 1996 minivan. It sued him in Oakland County Circuit Court later that month for "in excess of $10,000."

The company amended the lawsuit in the fall of '95 after Sheridan appeared on 20/20 and said the company knew its minivan latches weren't strong enough to secure the rear liftgate in even low-speed

Scoreboards
Sports Talk
Wing Nuts

Contacts
By e-mail
Post letters to The News
Person-to-person
Staff addresses
By phone
Departments and editors
Circulation
Home delivery

Search

accidents.

According to federal regulators, malfunctions with Chrysler minivan latches have resulted in at least 37 deaths and 100 serious injuries.

Sheridan, 45, declined to comment. His attorney, Courtney Morgan of Detroit, said Chrysler contends in the lawsuit that Sheridan's interview hurt sales of its 1996-model minivans. They had just gone on the market when the TV show aired.

"Never mind the fact that Paul never said a word about the 1996 minivans on the show," Morgan said.

The $82 million Chrysler is seeking from Sheridan is based on lost sales and how much it figures it would have had to spend on television ads rebutting Sheridan's interview.

"But even if that logic holds, how the hell can you get the money if you never spent it?" argued Morgan, who is representing Sheridan in a countersuit against the automaker.

Elletta Callahan, a professor of law and public policy in Syracuse University's School of Management, concurred Chrysler will have a difficult time collecting, saying: "It's always difficult to prove lost profits."

Chrysler attorneys apparently believe it will be equally difficult to convince juries that there never was a problem with its pre-1995-model minivan latches. The Ornelas case is the third the company has settled this year since a South Carolina jury rendered a record $262.5-million verdict in a similar case.

"They recognize that if a juror sees all the evidence they'll lose over and over again, so they're paying very large and very secret amounts of money to keep that from happening," said Mikal Watts, a Corpus Christi, Texas, attorney representing many plaintiffs in latch lawsuits against the company.

Ken Gluckman, assistant general counsel for product liability litigation at Chrysler, said the settlements simply reflect a flawed judicial system.

"The sad truth is that in today's judicial system, jurors can do anything," he said. "They're guided by emotion and aren't controlled by factual circumstances."

Four passengers -- including 1-year-old Lorena Casteneda and 4-year-old Diana Perez -- were allegedly ejected from the back of a Chrysler minivan in a low-speed crash in Los Angeles on Jan. 21, 1995, in the Ornelas case.

Gluckman noted 13 people were riding in the minivan designed for seven. Many were unbelted, he said, and there's evidence the minivan driver may have run a light.

"The plaintiffs in this case broke three laws," Gluckman said. "Yet we're supposed to be the evil ones."

Larry Grassini, the plaintiff's attorney in Ornelas, said his client "made a mistake by allowing so many people to ride" in the minivan.

"But that was a short-term mistake," he said. "Chrysler knew about their's for a long time."

Grassini said six of the 12 Ornelas jurors and one of the four alternates accepted questions from attorneys after the case was settled. He said they told a Chrysler jury consultant they would have wanted to hear from Sheridan, had the case gone trial.

"The jurors saw him as a key witness in what many of them said seemed to be some sort of corporate cover-up involving these latches," Grassini said.

Chrysler's Tyrrell said there was no cover-up and if the case had been tried, jurors would have learned Sheridan was not an engineer.

"Rather, he held a marketing position," Tyrrell said. "He never designed a liftgate latch and he never tested a latch."

Chrysler demoted Sheridan for poor job performance before firing him, Tyrrell said, and that further impugns his testimony.

That, however, contradicts Chrysler's performance evaluations of Sheridan obtained by The Detroit News. As recently as October 1994 -- two months before the automaker canned him -- various company brass wrote:

* "Paul does a thorough, detailed, organized and tireless job. He became an active promoter of advancing safety in the minivan program, only slowing when the reality of the interest from management became apparent to him."
* "Paul (Sheridan) did a good job as Chairman of the Minivan Safety Leadership team."
* "He is extremely knowledgeable and may very well be one of the best all around technical persons on staff."
* "Overall, I think Paul has done an excellent job."

What Sheridan said

Former Chrysler employee Paul Sheridan was fired in December 1994 for allegedly disseminating secret crash-test data on the 1996 minivan. He later appeared on 20/20 and said the automaker knew its minivan latches weren't strong enough to secure the rear liftgate in even low-speed accidents.

The law

Three years ago tomorrow, Sheridan sued Chrysler and three of its employees alleging they violated his rights under whistleblowers' protection laws. Those laws offer protection from companies that lash out against staffers who uncover wrongdoings. Chrysler, however, has argued Sheridan was fired for defensible reasons.

Who is Paul V. Sheridan?

The former employee at the center of high-stakes litigation involving Chrysler's minivan rear liftgate latches worked for two of the Big Three automakers since the early '80s.

Employment: Worked from 1981-84 for Ford Motor Co., including product and powertrain planning. From 1984-94, his duties at Chrysler Corp included engineering planning, helping arrange a

deal to equip Chrysler trucks with Cummins diesel engines and working on the minivan platform team.

Status: Seeking full-time employment. Chrysler fired him after finding phone records traced to a reporter for the trade weekly Automotive News. The automaker later sued him for disclosing company secrets involving minivan crash tests and comments about minivan latches on TV.

What's next

This week Chrysler settled a minivan latch case in Los Angeles before Sheridan was set to testify. It faces at least six more latch cases in next four months. Lawsuits between Sheridan and Chrysler are scheduled to go to trial in June.

Copyright 1998, The Detroit News

Comments?

TAB 2

EMPLOYEE NEWS DAILY

Thursday, March 19, 1998

Top Story

Chrysler is seeking $82 million from former employee Paul Sheridan, who was dismissed by the company for releasing confidential engineering information to the news media. Sheridan has testified against Chrysler in lawsuits involving the liftgate latch design on older-model Chrysler minivans. The $82 million represents the estimated loss in sales and potential advertising costs that resulted from an October 1995 interview with Sheridan that aired on the television program "20/20," during which he criticized Chrysler products.

Chrysler News

Bill O'Brien, Chrysler Vice President, General Counsel and Secretary, was honored last night in Chicago with the Minority Corporate Counsel Association's (MCCA) Diversity 2000 Award for his exemplary efforts in promoting diversity within Chrysler's legal department and with firms that supply legal services to Chrysler. The MCCA is a national, nonprofit organization created to promote the advancement of minority attorneys in corporate law departments.

The Jeep® Wrangler is the best value for a sport-utility vehicle under $25,000, according to the research firm IntelliChoice. The firm tracks the average cost of owning a new vehicle and says that these costs may be down for the first time in a decade. A 1998 car costs an average of $37,322 to own over five years, according to IntelliChoice. That cost includes depreciation, fuel, financing, maintenance, repairs, fuel and state fees. The estimate, while even with last year, was based on gas at $1.22 per gallon. Fuel prices since have fallen to less than $1 per gallon in many states. IntelliChoice President Peter Levy credits higher-quality cars for the drop in costs. "Repairs continue to be a smaller and smaller portion of expected costs," he said. (*Associated Press*)

Chrysler today celebrates its 1-millionth Neon produced at Belvidere (Ill.) Assembly Plant. Company and city officials will present owners of the Neon with keys and gifts from the plant. The plant produces Dodge and Plymouth Neon models and Chrysler Neon models for international markets.

In Today's *Chrysler Times*

The *Times* interviews Tom Pappert, the Vice President who guided Chrysler sales and service for many years. Pappert, who is retiring March 31,

Chrysler seeks $82 million from ex-employee

By David Lawder

DETROIT, March 19 (Reuters) - Chrysler Corp. <C.N> is seeking $82 million from a fired employee-turned-whistle blower who testified about the controversial rear-door latches in the company's older model minivans, lawyers involved in the lawsuit said Thursday.

The estimate of damages in the 3-year-old case in Oakland County Circuit Court surfaced this week in a just-settled Los Angeles case involving the minivan latches.

Chrysler alleges that an October 1995 interview of ex-product planner Paul Sheridan on ABC-TV's "20/20" news program cost the company an undetermined amount of damages.

On the broadcast, Sheridan said the company knew the latches on its 1984-95 minivans were not strong enough to keep the rear door from popping open in slow-speed, rear-end crashes, allowing unbelted passengers to be thrown out.

In a deposition last year, a Chrysler official estimated that Sheridan's statements cost the company $82 million -- including lost sales of minivans and an estimate of costs for a never-aired television advertising campaign refuting Sheridan's allegations.

The automaker in March 1995 agreed to replace latches on some 4.5 million 1984-1995 model minivans, but has steadfastly maintained the old latches contained no defects. The 1996 vans used a different latch design.

Chrysler attorney Steven Hantler said the company's main objective in the lawsuit is for Sheridan to abide by agreements he signed as a Chrysler employee not to disclose confidential and proprietary information.

"We have not come to rest on what we'll ask a jury for, maybe more or maybe less," Hantler said.

Chrysler continues to battle latch-related lawsuits, some of which include testimony from Sheridan.

The No. 3 Detroit automaker is appealing a $262.5 million South Carolina jury verdict in a latch case involving the death of a 6-year-old boy who was thrown from a minivan in a crash. The award is the largest jury verdict ever against an automaker in a product liability case.

The $82 million lawsuit is the latest in a continuing series of legal squabbles between Chrysler and Sheridan, who was fired in December 1994 for allegedly leaking confidential crash test data on the company's then-forthcoming 1996 minivan to an outside party.

The data, which claimed the vans had failed a government crash test, was later given to industry trade journal Automotive News, which published it.

Sheridan sued Chrysler in 1994, claiming the automaker owed him an undetermined amount of damages for wrongfully firing him, defaming him and damaging his reputation.

In that case, which is expected to go to trial this summer, Sheridan also claimed Chrysler rejected his proposals that the company use a stronger latch design and stronger seat frames in the new minivan design.

Sheridan's attorney, Courtney Morgan, said the latest lawsuit is aimed at intimidating the company's employees into keeping quiet about potential safety problems.

"It's clearly designed to have a chilling effect," Morgan said. "They're doing this as publicly as they can to make the message real clear to employees that this is what happens to people like Paul Sheridan."

22:12 03-19-98

Copyright 1998 Reuters Limited. All rights reserved. Republication or redistribution of Reuters content, including by framing or similiar means, is expressly prohibited without the prior written consent of Reuters. Reuters shall not be liable for any errors or delays in the content, or for any actions taken in reliance thereon. All active hyperlinks have been inserted by AOL.

TAB 3

Next Story
Return to the section index
Return to The Detroit News Home Page

August 4, 1996 BUSINESS

Door latch deal not as open, shut as thought

By Richard Willing
Chrysler Corp. continues to insist the rear door latches on its popular 1984-95 minivans are safe.

It is replacing them, the company says, to allay doubts raised by misleading reports in newspapers and on television.

But research done by the National Highway Traffic Safety Administration and contained in NHTSA files paints a different picture.

The latches, NHTSA determined, were significantly weaker than competitors' latches, more likely to open during a side-impact crash and to result in the ejection of rear-seat passengers who have mostly been children.

In November 1994, an NHTSA engineering analysis concluded that the "latch failure is a safety defect that involves children."

Four months later, Chrysler agreed to the replacement campaign, and NHTSA agreed not to enter a defect finding or to recall the vehicles.

"A deal was cut that allows a replacement campaign to proceed at a snail's pace," says safety consultant Ralph Hoar, Chrysler's chief critic in the matter.

"It was cut from a rigged deck Chrysler provided."

Copyright 1996, The Detroit News

Comments? Criticism? Story ideas? Talk to us.
Check Net Mail for comments and replies.

EA94-005 CHRYSLER MINIVAN LIFTGATE LATCH FAILURE

INVESTIGATION REVIEW

COPY OF MATERIALS
SHOWN TO CHRYSLER OFFICIALS,
NOVEMBER 17, 1994

EA94-005 CHRYSLER MINIVAN LIFTGATE LATCH FAILURE

DOOR LATCH SPECIFICATIONS

- **FMVSS No. 206 (SIDE DOORS) REQUIRES: (1) PRIMARY AND SECONDARY LATCH POSITIONS (2) NON-SEPARATION UNDER TRANSVERSE LOAD OF 2000 LBS. ON PRIMARY AND 1000 LBS. ON SECONDARY (3) NON-SEPARATION UNDER LONGITUDINAL LOAD OF 2500 LBS. ON PRIMARY AND 1000 LBS. ON SECONDARY. NO REQUIREMENT FOR LIFTGATE LATCH.**

- **CHRYSLER SPECIFICATION FOR REAR HATCH: (1) ONLY ONE LATCH POSITION (2) TRANSVERSE DIRECTION- 750 LBS. (3) NO REQUIREMENTS FOR THE LONGITUDINAL DIRECTION.**

- **FORD AEROSTAR AND GM APV SPECIFICATIONS: (1) PRIMARY AND SECONDARY LATCH POSITIONS (2) NON-SEPARATION UNDER LOADS THAT EQUAL OR EXCEED STANDARD 206 REQUIREMENTS FOR BOTH THE LATERAL AND LONGITUDINAL DIRECTIONS. THE FORD LATCH IS ENCLOSED IN A METAL CASE, AND THE APV INCORPORATES TWO LATCHES ONE ON EACH SIDE OF THE LIFTGATE.**

- **MOST OTHER PEER MINIVANS AS WELL AS STATION WAGONS INCORPORATE PRIMARY AND SECONDARY LATCH POSITIONS.**

EA94-005 CHRYSLER MINIVAN LIFTGATE LATCH FAILURE

TESTING (STATIC)

- ODI STATIC TESTING OF CHRYSLER AND PEER MINIVANS (FMVSS 206)
  - CHRYSLER MINIVANS, FORD AEROSTAR, CHEVROLET LUMINA APV, TOYOTA PREVIA MITSUBISHI EXPO, VOLKSWAGEN EURO VAN, MAZDA MPV, NISSAN QUEST, AND MERCURY VILLAGER WERE ALL TESTED AGAINST FMVSS No. 206.
  - PRE 1989 CHRYSLER MINIVANS HAVE NO LONGITUDINAL RETENTION CAPABILITY (NO UPSET HEAD ON STRIKER).
  - ONLY CHRYSLER MINIVAN LATCHES HAD FAILURE LOADS BELOW THE FMVSS 206 REQUIREMENT FOR THE TRANSVERSE DIRECTION (A MEAN OF 1300 LBS., 700 LBS BELOW THE 206 REQUIREMENT). THE MODIFIED LATCH FOR 1995 MODELS PASSED THE REQUIREMENT IN THE TRANSVERSE DIRECTION (2202 LBS).
  - MAZDA MPV LATCHES HAD FAILURE LOADS BELOW THE FMVSS 206 REQUIREMENT FOR THE LONGITUDINAL DIRECTION (A MEAN OF 1885 LBS., 615 LBS. BELOW THE 206 REQUIREMENT). TOYOTA PREVIA MARGINALLY FAILED AT 2437 LBS.

EA94-005 CHRYSLER MINIVAN LIFTGATE LATCH FAILURE

TESTING (STATIC)

- STATIC TESTING (MODIFIED LATERAL FMVSS 206)
  - GOAL WAS TO DUPLICATE THE FORK BOLT-DETENT LEVER BYPASS FAILURE SEEN IN THE FIELD
  - LATCH WAS TESTED AT ANGLES BETWEEN +90 AND -90 DEGREES.
  - THE 1991-1993 CHRYSLER MINIVAN WAS THE WORST PERFORMER IN ALL BUT THE -90 DEGREES DIRECTION AMONG ALL THE LATCHES TESTED. THIS DIRECTION IS SIMILAR TO A RIGHT-SIDE IMPACT TO THE VEHICLE.
  - THE DAMAGE PATTERN SEEN IN THE REAL WORLD WAS DUPLICATED IN +90 DEGREES DIRECTION. THE FORK BOLT AND DETENT LEVER BYPASSED EACH OTHER AND THE RESTRICTOR SLIPPED BEFORE ANY SIGNIFICANT BENDING HAD OCCURRED.
  - CHRYSLER'S TEST RESULTS COINCIDE WITH ODI'S TEST RESULTS.

EA94-005 CHRYSLER MINIVAN LIFTGATE LATCH FAILURE

TESTING (DYNAMIC, LEFT REAR QUARTER PANEL, MOVING DEFORMABLE BARRIER, MDB)

TEST NO.	MODEL	IMPACT SPEED	IMPACT DIRECTION	IMPACTING OBJECT	HATCH OPENED	EJECTION	REAR SEAT
1	'87 CARAVAN	33.6 MPH	26.4 DEG. FORWARD	3600 lb MDB	YES	2 DUMMIES	BENT
2	'91 CARAVAN	30.2 MPH	26.4 DEG. FORWARD	3600 lb MDB	NO	NO EJECTIONS	BENT
3	'91 CARAVAN	31.1 MPH	15 DEG. REARWARD	3600 lb MDB	YES	1 DUMMY	BENT
4	'91 AEROSTAR	31.1 MPH	15 DEG. REARWARD	3600 lb MDB	NO	NO EJECTIONS	OK
5	'91 MAZDA MPV	31.2 MPH	15 DEG. REARWARD	3600 lb MDB	NO	NO EJECTIONS	OK
6	'95 LATCH	31.1 MPH	15 DEG. REARWARD	3600 lb MDB	NO	NO EJECTIONS	BENT

EA94-005 CHRYSLER MINIVAN LIFTGATE LATCH FAILURE

CONCLUSIONS

- ANNECTODAL CASES
  - AT LOW AND MODERATE IMPACT SPEEDS, LIFTGATE OPENS AND OCCUPANTS ARE EJECTED.
  - LIFTGATE LATCHES EXHIBIT A COMMON FAILURE MODE (FORK BOLT-DETENT LEVER BYPASS).

- FARS DATA
  - CHRYSLER EJECTION RATE FOR KNOWN EJECTION PATHS IS TWICE THAT OF ALL OTHER MINIVANS.
  - 75% OF EJECTIONS ARE CODED UNDER UNKNOWN EJECTION PATHS. ANALYSIS OF THESE UNKNOWN CASES INDICATES THAT MANY MAY BE LIFTGATE FATAL EJECTIONS.

- NASS DATA
  - LIFTGATES OPEN DURING LOW AND MODERATE IMPACT SEVERITY.
  - LIFTGATE LATCH FAILURE ACCOUNTS FOR THE MAJORITY OF THE FAILURE MODES IN CHRYSLER MINIVANS.
  - CRASH SEVERITY IS LESS ON CHRYSLER VEHICLES.

EA94-005 CHRYSLER MINIVAN LIFTGATE LATCH FAILURE

CONCLUSIONS (CONT.)

- **STATIC COMPONENT TESTS**
  - **CHRYSLER'S DESIGN CRITERIA FOR THE LIFTGATE LATCH ARE LOWER THAN PEER AND FMVSS 206 STANDARDS**
  - **ONLY CHRYSLER MINIVAN LATCHES FAILED THE FMVSS 206 REQUIREMENT IN THE TRANSVERSE DIRECTION.**

- **DYNAMIC TESTS**
  - **AT A MODERATE SPEED IMPACT (30 MPH), CHRYSLER MINIVANS RESULT IN LIFTGATE LATCH FAILURE AND OCCUPANT EJECTIONS.**
  - **UNDER THE SAME TEST CONDITIONS, PEER VEHICLES' LIFTGATES REMAIMED CLOSED.**

- **LATCH DESIGN**
  - **CHRYSLER HAS BEEN MODIFYING THE LATCH/STIKER MECHANISM SINCE JANUARY OF 1988.**
  - **THE LATEST MODIFICATION IMPROVES THE STRENGTH OF THE LATCH BY 50% AND IS CURRENTLY BEING USED IS 1995 MODEL YEAR VEHICLES. IT COULD ALSO BE USED IN 1991 THROUGH 1994 MODEL YEAR VEHICLES.**
  - **THE INCREASED STRENGTH IN THE 1995 LATCH WAS DEMONSTRATED IN BOTH COMPONENT AND CRASH TESTS.**

- **THE LATCH FAILURE IS A SAFETY DEFECT THAT INVOLVES CHILDREN.**

TAB 4

BUSINESS
Chrysler to replace latches on more than 4 million vans
Bryan Gruley and David Sedgwick

03/28/1995
The Detroit News
2DOT
Page E1
(Copyright 1995)

The Detroit News

Chrysler Corp., facing a festering dilemma over the safety of its best-selling minivans, can thank federal safety regulators for helping it find a way out.

The automaker's decision to replace allegedly defective rear-door latches on more than 4 million minivans resulted from months of fierce debate inside the company, and top executives' reluctant admission that the automaker had more to lose than gain by fighting federal safety regulators.

But what cinched the deal announced Monday was the government's acceptance that **Chrysler** would conduct a "service campaign" rather than a "safety recall."

A recall would have forced **Chrysler** to admit to a safety defect, which would have hurt its image with customers and hamstrung its defense of the minivans against lawsuits.

Critics say the minivans' rear lift gates pop open in crashes, allowing passengers to be ejected. The National Highway Traffic Safety Administration (NHTSA) has reports linking ejections to 28 deaths.

Chrysler , which says the minivans are safe, now can boast of serving customers with a program that will cost only $100 million to $200 million, small change for a company with $8.4 billion in cash. **Chrysler** will replace the rear-door latches on 1984-94 minivans with slightly stronger 1995 latches at no cost to owners.

The campaign, to be touted in television and print ads beginning today, could bring crowds of customers into dealerships just as **Chrysler** begins to sell its newly styled 1996 minivans.

Arthur C. "Bud" Liebler, **Chrysler** 's vice-president of marketing and communications, said the company does not believe the old latches are defective as critics allege.

But escalating media coverage of the federal safety investigation and several recent minivan crashes have prompted "growing concern" among customers, he said.

"We just can't let this go on any longer," Liebler said. "We're taking action we believe will give (customers) peace of mind."

Chrysler will send letters notifying 3.9 million minivan owners in the United States and 600,000 in Canada of the service campaign. A follow-up letter will tell when replacement parts are

available. And owners who bring minivans to dealers for any reason will be asked if they want the latches replaced.

NHTSA has been investigating the minivans for 18 months. **Chrysler** proposed replacing the latches a week and a half ago _ but insisted it would not say the vehicles are in any way defective.

"That was key," one **Chrysler** official said.

NHTSA Administrator Ricardo Martinez signed off on the campaign early Monday, faxing a letter to **Chrysler** Chairman Robert J. Eaton that praised the company for "safety leadership."

Martinez was not directly involved in the negotiations, but spoke with Eaton about NHTSA's investigatory process in the case at least twice in recent weeks, said Philip Recht, the agency's top lawyer.

Some minivan owners and safety advocates criticized the agreement as inadequate. Service campaigns usually don't get as much consumer response as recalls, which explicitly raise safety concerns.

"The only way to prevent future loss of life is to do a recall so people realize it's a safety problem," said Nancy Hartshorne of Mt. Pleasant, whose two young children died after they were flung from a **Chrysler** minivan in 1992.

Ralph Hoar, an Arlington, Va., consultant who has pressed for a recall, said, "I don't know how they convince people to bring in their minivans . . . all the while saying there's nothing wrong with them."

But **Chrysler** 's Liebler said the company expects to reach "more people than NHTSA normally would." The agency will keep its investigation open to monitor the response, Recht said.

NHTSA began investigating the minivans in October 1993.

By last fall, some **Chrysler** executives were quietly arguing that the company should put the controversy behind it. While **Chrysler** President Robert A. Lutz and others argued for resisting anything that resembled a recall, a camp led by Liebler backed remedial steps.

Chrysler grew increasingly frustrated with NHTSA's apparent refusal to agree that crash statistics showed the vans were safer than virtually any other vehicle. Eaton vented that frustration and foreshadowed Monday's decision _ in a recent speech in Detroit.

After blasting lawyers who sue manufacturers as "parasites" who feed off the regulatory process, Eaton said: "The safest thing to do whenever the government . . . suggests a voluntary recall is simply to comply _ whether there is any justification for it or not."

Increasingly, **Chrysler** has gotten hammered in the media. The television news program Inside Edition aired two critical stories, and 20/20 has been preparing a story to air soon.

"It does no good for us to complain about unfairness, questionable sources, accuracy or data," Liebler said. "Such coverage . . . causes tremendous concern for our family of minivan owners."

Display as: Full Article

Return to Headlines

Chrysler Minivan Liftgate Latch
Press Conference
Monday, March 27, 1995

Chris Theodore Q & A Responses

Question :

"What are you replacing them with, and how are you fixing them?"

Answer :

"Excuse me. The latches we'll be replacing them with are the 1995 model year latches, as part of our continuous improvement program on the whole product; we're continuously trying to improve the vehicle. So we've been strengthening our latches over the years, just as we improve our air bag systems and everything else. So the 95 latch we will be putting on are 1991, excuse me, 1990 through 1994 model minivans, and something similar to it on prior model years."

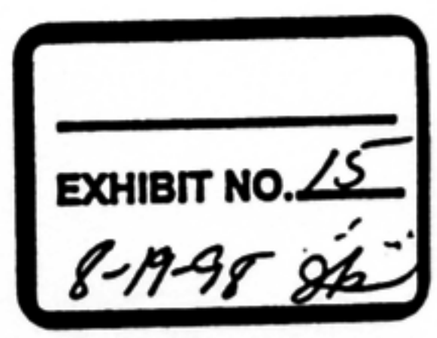

Chrysler Minivan Liftgate Latch
Press Conference
Monday, March 27, 1995

Chris Theodore Q & A Responses

Question :

"Could you tell me if the new latch is going to be a double stage latch, or simply a stronger latch?"

Answer :

"It's a single latch; it does not have a secondary. Nor is there a need for a secondary in our mind because a secondary is replicated in our minivan by having a liftgate ajar light and a warning chime."

Chrysler Minivan Liftgate Latch
Press Conference
Monday, March 27, 1995

Chris Theodore Q & A Responses

Question :

"What are the mechanical changes in this latch that make it better; qualitatively better than the old one?"

Answer :

"Well, maybe I should show them to you later. It's just under extreme deformation, we limit the amount of deformation that can go on in the latch, and it does make it a little stronger. I can show you the details afterwards."

Chrysler Minivan Liftgate Latch
Press Conference
Monday, March 27, 1995

Chris Theodore Q & A Responses

Question :

"Can you talk about much greater crash force this new latch can withstand compared to the previous latches? I mean, is it 50% greater or something like that?"

Answer :

"No. You're really into an esoteric issue. I think Dale (Dawkins) and I would love to regale you all with all the intricacies of latch. First of all, everyone ties into latch, but it's the entire hatch and the body structure and everything else. We can spend a couple of hours going through it. The strength of the latch is increased but you have to consider the entire system and that becomes a very, very complicated discussion."

"Let me continue . . . Again, if you look at the data that Bud (Liebler) presented, clearly it's not happening there in the real world. So the amount of incremental improvement that you get as far as hatch openings is concerned; it's probably unmeasurable, but it's directionally correct and that's why we're taking that action."

Article View

Article 1 of 1

Chrysler Asserts Pact With Regulators To Fix Minivan Latches Isn't Binding

By Bryan Gruley

11/30/95
The Wall Street Journal
Page A4
(Copyright (c) 1995, Dow Jones & Company, Inc.)

WASHINGTON -- Chrysler Corp. told a federal court the auto maker has no legally binding agreement with safety regulators to fix rear-door latches on more than four million minivans, and the company is "free to discontinue" the repair program at any time.

The statements in a 27-page brief filed in San Francisco appear to conflict with Chrysler's public vow to replace the latches on its 1994-95 minivans at no charge to owners. The commitment prompted the National Highway Traffic Safety Administration last month to close its investigation of potential safety defects in the latches.

But now Chrysler is trying to persuade a federal judge to approve a proposed settlement of seven class-action lawsuits involving the same issue. The company's legal brief attempts to rebut opponents who want the settlement rejected because, they contend, it doesn't offer minivan owners anything more than what Chrysler already has agreed to.

Chrysler's brief says opponents are mistaken because "there was no binding and written agreement with NHTSA." Further, the brief says, NHTSA has "no regulatory authority" over the latch-replacement campaign and Chrysler is "free to discontinue its service action at any time."

Chrysler says those arguments are technically correct but the company has no intention of abandoning the repair campaign. Lewis Goldfarb, Chrysler's assistant general counsel, said, "The commitment to NHTSA is a promise, while the [class-action] settlement is a contract." Mr. Goldfarb said the settlement, if approved, would make Chrysler's commitment to NHTSA legally binding.

But critics say the company is playing word games to gain approval of the settlement, which would shield it from lawsuits under which owners could demand that their minivans be replaced or purchased by Chrysler.

"If what Chrysler says is true, they're thumbing their nose at the regulatory agency and sending a signal that any car company can cut a deal [with regulators] and renege on it," said Clarence Ditlow, director of the Center for Auto Safety, a Washington consumer group that is opposing the settlement in court.

NHTSA investigated whether the door latches were prone to fail in crashes, allowing passengers to be ejected. On March 27, Chrysler told the agency it would replace the latches. Last month, the agency formally closed its investigation, amid criticism that regulators had abdicated their responsibility to determine whether the vans posed a safety hazard.

Separately, Chrysler agreed to settle class-action suits alleging the door latches are defective. Under the settlement, Chrysler would do what it has told NHTSA it would do. In addition, the company agreed to spend at least $14 million to notify minivan owners of the campaign if at least 60% don't

bring minivans in for new latches within 18 months.

Lawyers for the class-action plaintiffs would be paid $5 million in fees. The settlement also would release Chrysler from claims that could be made under state consumer-protection laws.

The Center for Auto Safety and a handful of minivan owners have urged the court to reject the settlement because it is essentially the same as Chrysler's commitment to NHTSA.

Barry McCahill, a NHTSA spokesman, said the agency believes it has an agreement with Chrysler, "and any effort to slip on that will not be tolerated." Among other things, NHTSA could reopen its investigation if Chrysler failed to fulfill its vow.

Oral arguments in the class-action case are scheduled for today.

Chrysler's brief also raises the possibility that delay in approval of the settlement could bring the repair campaign to a halt, if the court insists on considering whether the replacement latches are adequate. Chrysler, in its brief, argues that NHTSA's endorsement of the replacement parts is sufficient.

Return to Headlines

Copyright © 1998 Dow Jones & Company, Inc. All Rights Reserved.

TAB 5

CHRYSLER CORPORATION

Theodor R Cunningham
Executive Vice President - Sales and Marketing
General Manager - Minivan Operations

Dear

There has been recent and highly visible media coverage questioning the safety of liftgate latches on 1984 - 1994 Chrysler, Plymouth and Dodge minivans. This coverage is emotional in nature, and may have raised concern among some of the four million owners of Chrysler, Plymouth and Dodge minivans. Peace of mind among minivan owners is very important to Chrysler, so we are writing to explain our views and the actions we intend to take.

Chrysler Corporation firmly stands behind the quality and safety of our minivans, including the liftgate latches. There has been no formal determination that a safety defect exists with minivan latches. However, to help ensure peace of mind that your minivan is safe, Chrysler has decided to provide a stronger latch. We will replace your minivan's liftgate latch with a stronger component at no charge to you.

Because new latches must be tooled and fabricated to fit your minivan, it will take some time to have a supply of new latches available. During the next several months, we will notify you when the proper parts are on hand at dealerships to perform this service action. All you need do when you receive the notice is to telephone your dealer to schedule an appointment. Your dealer will schedule you for the earliest possible appointment as soon as parts availability permits. For more information regarding minivan liftgate latches and anticipated parts availability, please call us toll-free at 1-800-MINIVAN (646-4826).

We believe, and the National Highway Traffic Safety Administration (NHTSA) agrees, that the single most important safety action you can take is to ensure that all occupants are wearing seat belts properly at all times. And, of course, never allow anyone to occupy the cargo area. Also, please ensure that any removable seat has been securely reattached before the vehicle is driven.

NHTSA has been conducting an investigation of the latches on these vehicles. If you have any concerns regarding this service action, you may call the NHTSA Toll Free Safety Hotline at 1-800-424-9393.

Chrysler Corporation has a history of safety leadership. We take it very seriously. We at Chrysler Corporation want you to be safe--and certain.

Sincerely,

Chrysler Corporation
P.O. Box 3118
Bloomfield Hills, MI 48302-3118

840787222

Süddeutsche Zeitung
"Cars and Traffic"
Saturday, July 25, 1998

The allegedly weak door latch on the Voyager leaves Chrysler with explaining to do

Replacing the part is "not relevant for us in Europe"

Tailgate opens in side collisions/Controversial part was apparently only used in the U.S.

Embarrassed silence prevails at the German branch of Chrysler, the third largest U.S. auto manufacturer. The company is being pilloried because of possible safety defects in the European edition of its Voyager minivan. At least, that's how it looks to Ralph Hoar, safety consultant from Arlington, Virginia, who specializes in automotive engineering. He is trying to prove that Chrysler is treating European Voyager owners like second-class customers.

At least 37 deaths have resulted in the U.S. when Voyager tailgates opened on (side) impact during accidents. Passengers were ejected from the third row of seats in the minivan through the open tailgate. After these deaths, Chrysler installed new tailgate latches for its approximately 4.5 million Voyager customers in North America.

For the approximately 200,000 European customers who drive Voyagers which are '95 and earlier models, there has been no recall campaign from Chrysler up to this point. Safety-conscious Ralph Hoar supposes that they are driving around just like before with the old, less securely designed tailgate latch.

In order to confirm his suspicions, Hoar recently had the tailgate latch removed from a 1991 and a 1994 Voyager in Baden-Württemberg. This revealed that these latches were the old version of the component. Hoar had both latches sent to the U.S. as evidence. New latches were installed on both vehicles. One latch was sent from the U.S. and the other was a replacement part purchased for DM 118.47 at a German Chrysler dealership.

During the early stages of the latch exchange, Chrysler USA explained that there was a recall action in Europe and that "thousands of latches" had already been replaced. According to Chrysler Deutschland at first, however, "replacing the part is not relevant for us in Europe." Concerning the contradictory statements from Chrysler USA and Chrysler Deutschland, and the results of the latch exchange mentioned, Andrea Leitner, press representative for Chrysler Deutschland, simply said, "We have no comment on that."

AXEL WOLF

RALPH HOAR & ASSOCIATES LLC

1001 North Highland Street, Suite 300, Arlington, Virginia 22201
Phone: 703-841-8384 *Facsimile*: 703-841-8390
E-mail: rha@safetyforum.com
Website: http://www.safetyforum.com

FOR IMMEDIATE RELEASE
TUESDAY, AUGUST 11, 1998

CONTACT: RALPH HOAR
703-841-8384
www.safetyforum.com

SAFETY CONSULTANT OFFERS DM1,000 FOR COPY OF CHRYSLER'S EUROPEAN MINIVAN LATCH LETTER

Auto safety consultant Ralph Hoar is offering 1,000 Deutschmarks for a copy of the minivan latch warning letter that Chrysler claims it sent to 200,000 European Chrysler minivan owners. Hoar has a safety consulting firm in Arlington, Virginia. He has been a long-time critic of Chrysler's minivan rear liftgate latches, and of Chrysler's efforts to minimize the hazards associated with the defective latches.

Last month, Hoar announced that Chrysler had "failed to tell European van owners of the faulty latches" and had "not offered to replace defective latches on the rear doors of minivans it sold overseas as it has in the U.S."

Chrysler immediately issued a statement saying, "Nothing could be further from the truth." Chrysler claimed that it "did notify distributors, and even notified customers directly in the two countries with the most minivan sales – Germany and France." The company claimed "we followed the same formula around the world." The company accused Hoar of "spreading false claims."

"Chrysler has distorted the truth about its defective minivan latches since the controversy began. It's unlikely to change now," Hoar said. "It will be interesting to see which attitude toward safety will prevail when Chrysler and Mercedes join forces. Chrysler could learn a few things from its new partner," Hoar added. He noted that Mercedes spent enormous sums of money to redesign, recall and change the entire suspension in its new "A" car when it proved prone to rollover. "We've urged Chrysler to stop treating its European customers like second class citizens. Chrysler should warn Europeans of the hazard that the latches pose and offer to replace latches on European vans at no charge – just as they've done in the U.S. and Canada – nothing more, nothing less," Hoar said.

Chrysler's statement last month claims they've already done so. "Chrysler has repeatedly refused our request and the requests of others for copies of the letters that they sent to European van owners. That's why we're offering DM1,000 to the first European Chrysler minivan owner

who provides us with a copy of a letter from Chrysler warning that the latch might fail and offering to replace the latch at no cost to the van owner. The letter must predate our July 10, 1998, announcement," Hoar said.

German journalist Axel Wolf reported on July 25, 1998, in *Suddeutsche Zeitung* that in Germany "there has been no recall campaign from Chrysler up to this point." Contrary to what Chrysler was saying in the U.S., a Chrysler Germany spokesperson told Wolf "replacing the part is not relevant for us in Europe." Concerning the contradictory statements from Chrysler USA and Chrysler Germany, Andrea Leitner, press representative for Chrysler Germany, stated, "We have no comment on that."

The letter can be sent via fax to 703-841-8390 or via mail to 1001 N. Highland St., Suite 300, Arlington, Virginia, 22201, U.S.A. For further information visit http://www.safetyforum.com

TAB 6

U.S. Department
of Transportation

**National Highway
Traffic Safety
Administration**

400 Seventh Street, S.W
Washington, D.C. , 20590

SEP 28 1995

Mr. Dale Dawkins
Director, Vehicle Compliance and Safety Affairs
Chrysler Technology Center
800 Chrysler Drive (CIMS 482-00-01)
Auburn Hills, MI 48326-2757

Dear Mr. Dawkins:

As I indicated in my letter to you dated September 25, 1995, the National Highway Traffic Safety Administration (NHTSA) was very concerned by a recent national television report which showed Chrysler's minivan hotline operators minimizing the safety implications of Chrysler's latch replacement campaign in the course of various phone calls with minivan owners.

Since sending that letter, NHTSA has obtained a copy of the question and answer script which the minivan hotline operators have been using to respond to owner inquiries. In a phone conversation on September 27, you confirmed that the script was being used by the operators.

NHTSA is very troubled by the tone and substance of the script. Like the operators shown on the television report, the script attempts to minimize, if not deny outright, the safety concerns which prompted NHTSA to open its investigation into the minivan latches. To resolve these concerns, NHTSA insisted on Chrysler's agreement to provide stronger, safer latches at no charge to all minivan owners.

Indeed, the script leads minivan owners to incorrectly believe that NHTSA found the minivan latches to contain no defect. For example, at one point, the script states that NHTSA has "made no finding of defect;" a few lines later, the script states, "there is no defect with the current latch." Perhaps most disturbingly, the script states that "[a]fter careful review and extensive cooperation with NHTSA it is clear that there is no problem with the minivan latch and no safety defect."

As Chrysler is well aware, NHTSA at no time made any finding that the minivan latches contain no defect. Rather, shortly before the point in the investigation when NHTSA would have decided whether a safety defect exists, Chrysler offered to conduct a latch replacement campaign which will provide minivan owners with a stronger, safer latch at no charge. NHTSA accepted the offer because it promised to provide minivan owners with all the safety benefits of a formal recall campaign at the earliest possible date. Under the circumstances, it was no longer necessary for NHTSA to decide whether to make a formal defect finding. NHTSA did not do so. NHTSA at no time found the latches to be safe.

NHTSA's concerns with the hotline script are not simply academic. Indeed, while it disturbs us that our position in this investigation would be distorted, we are much more disturbed by the prospect that numerous minivan owners are being led into a false sense of security about the safety of their minivan latches. This could lead them to be less concerned with buckling up and less prone to have their latches replaced.

In our most recent conversation concerning this matter, you stated that, in response to NHTSA's concerns, Chrysler would take immediate action to revise the script to eliminate the misleading portions. We look forward to working with you to assure that the revisions do not mislead the public.

In the meantime, Chrysler should communicate in the near future with its minivan owners to inform them of the replacement schedule, to clearly convey the safety concerns which underlie NHTSA's investigation, and to encourage them to have the repairs made promptly upon being notified that parts are available.

Sincerely,

Michael B. Brownlee
Associate Administrator for Safety Assurance

TAB 7

RADIO TV REPORTS

New York: 212-309-1400
Chicago: 312-541-2020
Detroit: 810-344-1177
Boston: 617-536-2232
Philadelphia: 215-567-7600
San Francisco: 415-395-9131
Miami: 305-358-3358
Washington: 301-656-4068
Los Angeles: 213-466-6124

TRANSCRIPT

FOR	CHAMBERS, STEINER, MAZUR, ORSTEIN	**STATION**	WNYW-TV
PROGRAM	A CURRENT AFFAIR	**CITY**	CHICAGO
DATE	09/20/95 06:12PM	**AUDIENCE**	
SUBJECT	CHRYSLER MINI VAN HOTLINE STORY		

JON SCOTT, ANCHOR: If you don't own a Chrysler mini van, chances are somebody you know does. They are enormously popular. But after questions arose about the safety of one of the van's key components, Chrysler promised it would take action. How's it going? Well see what you think after you watch this from our investigative reporter, Karl Idsvoog.

ANGELA WOHLDMANN, MARITZ, INC. OPERATOR: Okay sir.. Sir, do you understand that this is not a recall, that they have not found any type of defective work here?

KARL IDSVOOG, REPORTER: What this woman is talking about is one of the most popular family vehicles ever made: the Chrysler mini van. (Visual: Chrysler mini van on road) Chrysler Corporation is doing something absolutely unheard of in automotive history. It is spending millions of dollars to replace the rear door latch on it's 1984 to '95 mini vans it says is not defective. Why would you replace a part when there's nothing wrong with it?

CLARENCE DITLOW, EXECUTIVE DIRECTOR, CENTER FOR AUTO SAFETY: This is one of the most lethal defects that we've seen in auto safety history.

IDSVOOG: Clarence Ditlow (sp?) is Executive Director for the Center for Auto Safety. The Center has been analyzing mini van latch complaints for the past 5 years. (Visual: Ditlow in his office)

DITLOW: There've been at least 41 people killed in ejections from the rear. An average recall doesn't have a single death, let alone 41 deaths. Even the Ford Pinto, which people think of as one of the worst safety defects ever, only had 28 known deaths at the time the government ordered the recall in that case.

IDSVOOG: Last March, the government made a deal with Chrysler Corporation. Chrysler agreed to replace the latches and the government did not order a recall.

While Radio TV Reports endeavors to assure the accuracy of material supplied by it, it cannot be responsible for mistakes or omissions.
Material supplied by Radio TV Reports may be used for file and reference purposes only. It may not be reproduced, sold or publicly demonstrated or exhibited.

(Visual: Wohldmann at work in Maritz office) As part of what Chrysler calls, it's 'service action', it hired this St. Charles, Missouri telemarketing firm, Maritz, to set up it's toll-free mini van hotline. (Visual: Maritz, Inc. building) Maritz operators have Chrysler's scripted answers to almost every conceivable question. So when you call with a question, operators read you a carefully prepared response. (Visual: printed document of Chrysler scripted answers seen)

Chrysler says it's all to give its customers peace of mind.

CLIP OF CHRYSLER TV AD: Your concern is our concern..

IDSVOOG: But what's really going on here? With her manager laughing in the background, here's how an operator from the mini van hotline responds to a customer worried about safety. (Visual: Wohldmann on a call at work, Lou Nimnick laughs in background)

WOHLDMANN: Make sure your children are properly seated in the rear seat in the rear seat belts. My name is Angela Wohldmann, W-O-H-L-D-M-A-N-N.

IDSVOOG: Watch and listen to what happens when the caller isn't satisfied with the response and wants to talk with someone else. And by the way, the guy in the background is the top manager of the hotline, Lou Nimnick (sp?). We'll hear from him later.

WOHLDMANN: (talking to customer) I am a supervisor sir. There is nobody above me. (pause for response) Okay, well let me go try to find a supervisor for you, but I.. have to.. (call is ended)

WOHLDMANN: (looking at phone) Dick!

IDSVOOG: Keep in mind, Chrysler set up this hotline to respond to the safety concerns of it's mini vans owners. (Visual: graphic reads 1-800-MINIVAN with Chrysler logo underneath) And with some reports of accidents where the hatch opened upon impact and people flew out the back and were seriously injured or killed, owners may have good reason to be concerned. (Visual: Chrysler mini vans on road, and a damaged mini van)

But that's not what the mini van hotline operators are scripted to say. We repeatedly heard operators tell callers, there was nothing to be concerned about.

FEMALE MARITZ OPERATOR: No, there's no problem with the latch. (Visual: operators in Maritz office)

MALE MARITZ OPERATOR: Let us say, they did find no defect..

IDSVOOG: Some mini van owners told A Current Affair, when they called the hotline, they felt mislead and mistreated. (Visual:

Wohldmann walking around smiling smugly)

BRENDA WARE, HOTLINE CALLER: He called me a liar.. He made me feel like I was like, this small.. (Visual: she indicates smallness with fingers)

STUART NIXON, HOTLINE CALLER: The way she put it, it was a nuisance-type problem. And to me, that's not a nuisance; that's a potential hazard.

IDSVOOG: Another person who didn't like what he heard from the mini van hotline, was a man who used to work there.

BRIAN RANDAM: I don't think the American public were getting the straight scoop.

IDSVOOG: He's Brian Randam (sp?) and he wanted the public to know what he learned. (Visual: Brian Randam in parking lot) That's when A Current Affair got involved. We hired him to wear a hidden camera and document what he observed. He had worked on Maritz's projects for 7 weeks and his last 2 days, recorded what happens when customers called. (Visual: more Maritz operators; Bill Sissler and children in his mini van) Customers like Bill Sissler (sp?) of Winchester, Maryland, who hauls his kids everywhere in his mini van.

BILL SISSLER, PARENT: We're in it practically every day. I don't want an accident to occur like it has happened to other people.

IDSVOOG: Sissler's had no problems with the latch on his van and he wants to make sure he never does. So he called the hotline.

SISSLER: I was not very satisfied with the answer and I asked for, you know, to speak with someone else.

MALE MARITZ OPERATOR: Do you want me to hand you over to my supervisor now sir? (Visual: inside Maritz office)

IDSVOOG: Did you ever wonder what happens when you ask to speak to someone's supervisor? Well here's what happened with Bill Sissler's call. The operator tells the supervisor an upset customer wants to talk. (Visual: a supervisor is standing next to operator on phone with Sissler)

MALE OPERATOR: You want to talk to him Lou? Or do you want me to get his name and number?

MARITZ SUPERVISOR OPERATOR: Get his name and number, 'cause I'm about to go to lunch.

IDSVOOG: With one supervisor heading to lunch, our man seeks out another.

WOHLDMANN: This guy can stew for a minute..

IDSVOOG: After letting him stew, the call gets passed to Lou Nimnick. He's the guy you saw laughing before. He tells Bill Sissler there's nothing wrong with his van.

LOU NIMNICK, HEAD SUPERVISOR OF MARITZ: The latch on your vehicle is safe.

IDSVOOG: But just listen to what he says the next day..

NIMNICK: They certainly could have built a better latch, to start with. There's no question; they built a helluva van.. However if you look at it, it is the safest car (censored word) on the road, as a class, which means that, if you're gonna analyze it, even though Chrysler could have done a better job on their latches there's a (garbled word) and a few people killed that wouldn't be.. There's no question.. There's probably been.. as many as 20 or 30 or 50 people who were killed in the mini van or severely screwed up when there would have only been maybe five or so..

IDSVOOG: One thing to keep in mind: A manager of a consumer hotline is not a safety engineer. (Visual: Nimnitz and Wohldmann) So when the manager tells an employee people have died because of a problem with the latch, that's simply his opinion.. not Chrysler's.

Although the National Highway Traffic Safety Administration, NHTSA, has not officially declared the mini van latch defective, a top NHTSA official told A Current Affair just 2 weeks ago, "The bottom line is, there's a safety problem." When we told that official the mini van hotline was telling customers the government found no problems with the latch? He disagreed, telling us, "That infers we gave Chrysler a clean bill of health. That is certainly not the case."

The government's auto safety experts refused to be interviewed on camera for our story. (Visual: government building, Chrysler TV commercial) So did Chrysler executives. Chrysler told us, it would answer absolutely no questions from A Current Affair. One person who was able to get candid comments was our man on the inside. Listen to what the head of the mini van hotline said about customers' safety concerns when he wasn't reading the Chrysler script. (Visual: Lou Nimnitz in Maritz office)

NIMNICK: Why do they keep these damn, unsafe, terrible, horrible latch.. screwed up latch mini vans? If they're so concerned about their children? And I'm serious. If it's that much of a (censored word).. If it really is that big of a deal, why don't they take the damn Caravan and go and trade it in for a new Windstar or whatever..

IDSVOOG: I think it's time Chrysler took a look at the operation of it's hotline as well as it's tailgate latches.

[End]

TAB 8

A C Liebler
Vice President
Marketing and Communications

CHRYSLER CORPORATION

December 8, 1995

Mrs. Ananias
Sugar Creek Elementary School
c/o Ciskey
1303 Courtland Avenue
Normal, IL 61761

Dear Mrs. Ananias:

I am enclosing a letter to respond to your students and to try to put some perspective into the suffering they have endured over Brandon Auer's death. As you might imagine, we take great exception to the way "20/20" reported the story on the minivan latches, but that's beside the point.

Frankly, I'm a little bit surprised that you would have your students write letters like these to Chrysler. It seems like a rather maudlin and painful assignment from the students' point of view, but maybe you felt it was therapeutic to them and, if it was, then I guess it was a worthwhile exercise. I'm not sure the idea of making them afraid to get into their parents' minivans was a very good idea, though, and I'd be surprised if so many of them came up with that sentiment on their own.

I am also not sure you will want to share my letter with your students. That's your call. My intent was simply to tell them that Chrysler does care about what happens in its vehicles, and that we do care a great deal when people like Brandon Auer are injured or lose their lives. At the same time, I hope you recognize that we do everything possible to avoid such injury and loss of lives and understand the loss and pain even without a package of letters from sad and confused third graders.

Sincerely,

Bud Liebler

ACL/mlz

Marketing and Communications
Chrysler Corporation
12000 Chrysler Drive
Highland Park MI 48288-0001

CIMS 416-19-04

This transcript has not yet been checked against videotape and cannot, for that reason, be guaranteed as to accuracy of speakers and spelling. (LW)

ABC NEWS 20/20 Transcript #1543

October 27, 1995

HUGH DOWNS, ABC News: Good evening. I'm Hugh Downs.
BARBARA WALTERS, ABC News: And I'm Barbara Walters and this is 20/20.
HUGH DOWNS, ABC News: Good evening. I'm Hugh Downs.
BARBARA WALTERS, ABC News: And I'm Barbara Walters and this is 20/20.
ANNOUNCER: From ABC News, around the world and into your home, the stories that touch your life, with Hugh Downs and Barbara Walters, this is 20/20.

Tonight, an inside story— as tragic accidents continue to happen.

TIM HARTSHORNE: The back hatch opened and the children were thrown out and that killed them.

ANNOUNCER: A 20/20 investigation of Chrysler minivans and the rear latch that can fail.

ALEX BOYD: *[sp?]* I was sitting in the back seat and I had a lap belt on and I flew out the back.

ANNOUNCER: Now, you'll see it in writing, hear it from an insider.

JAMES WALKER, ABC News: How long has Chrysler known about this?

ANNOUNCER: Are your passengers safe in the back?

JAMES WALKER: Chrysler says they are fixing the latches.

BRIAN AUER: Well, not fast enough.

DONNA AUER: Not fast enough.

ANNOUNCER: James Walker's report could save the lives of the people you love— Open To Danger?.

And, the controversy that stirred up this crowd may divide your family. Whose side would you take? The student who sued her public school?

RACHEL BAUCHMAN: I can't identify with kids singing Jesus is my savior when Jesus isn't my savior.

ANNOUNCER: Or the community that united against her?

JOHN BRINTON, Choir Member: We just want to sing beautiful music.

ANNOUNCER: Should Christian music be sung in a public school choir?

JOHN STOSSEL, ABC News: Nobody else is complaining.

ERIC BAUCHMAN, Rachel's Father\: Nobody else wanted to complain.

ANNOUNCER: John Stossel with a Jewish teenager who refused to sing with the crowd and the school that turned against her— Standing Alone.

Plus, the story you've been waiting for— the new life of an extraordinary family. You met their beautiful little girls, born as one. You shared their anguished decision to separate them. Now, see what love and time can do. Plus, the Holtons reach out to another family like them. Hugh Downs with a tender saga of love, loss and remarkable spirit. An inspiring new chapter in this 20/20 classic— Divided By Love.

Those stories tonight, October 27th, 1995, after this brief message.

[Commercial break]

Open To Danger?

BARBARA WALTERS: We begin with the new and troubling headlines about one of America's most popular family vehicles, the Chrysler minivan. More than four million of them are on the road now. This week, government safety experts announced what Chrysler has denied for years and continues to deny today— that the minivan has a safety problem, a rear latch that can open in collisions, allowing passengers to be thrown out, sometimes to their deaths.

HUGH DOWNS: And this news was not a surprise to us. For the past nine months, 20/20 has been investigating complaints about these rear latches and what we discovered has raised some serious questions. As correspondent James Walker reports, why has Chrysler waited years to strengthen this latch and is the government doing enough to protect minivan passengers?

JAMES WALKER: *[voice-over]* There was Alex Boyd in North Carolina.

ALEX BOYD: I was sitting in the back seat and I had a lap belt on and I flew out the back of that door and I got stitches there and stitches up there.

JAMES WALKER: *[voice-over]* Graham Woodbrook *[sp?]* in Florida.

GRAHAM WOODBROOK: I turned around to see if everybody was okay and I didn't see the two girls and I couldn't see Heidi and the rear door was open.

JAMES WALKER: *[voice-over]* And Tim Hartshorne in Michigan.

TIM HARTSHORNE: The only thing I know for sure is that the seat belts came undone and then the back hatch opened and the children were thrown out and that killed them.

JAMES WALKER: These accidents, which involved Chrysler minivans, have something in common. When the vans were hit, even at moderate speeds, this rear door latch apparently twisted. The lift gate popped open and passengers sitting in this removable seat, some wearing seat belts, some not, were ejected out of the back.

TIM HARTSHORNE: It was being hurled from the car that caused their deaths. It was the breakage of all their bones that caused their deaths.

JAMES WALKER: *[voice-over]* Eight-year-old Michael Hartshorne and his 15-month-old sister Katherine *[sp?]* were ejected from their parents' Plymouth minivan. The accident, in Mt. Pleasant, Michigan, happened in 1992.

JEFFREY SHELL, Officer, Mt. Pleasant, Michigan Police: The eight-year-old is the one that landed next to the house in the bushes and the infant and the car

seat were thrown into this area of the yard over here.

JAMES WALKER: *[voice-over]* The Hartshornes sued Chrysler, alleging a weak latch was responsible for their children's deaths. The company settled the lawsuit out of court. Last fall, the federal government conducted these crash tests, which it made public two days ago. When a Chrysler minivan is hit at 30 miles an hour, the rear hatch opens and passengers are ejected. By March of this year, the government had received reports that 32 passengers had been killed and 76 injured in these types of accidents. Under mounting pressure and with the g's blessing, Chrysler responded.

A.C. "BUD" LIEBLER, Vice President, Chrysler Corporation: *[March 27, 1993]* Today we are announcing an unprecedented action that is going to put the issue of Chrysler minivan lift gate latches behind us.

JAMES WALKER: *[voice-over]* Chrysler insisted that the rear door latch was safe.

A.C. "BUD" LIEBLER: Now throughout this investigation, Chrysler has maintained that there is no safety defect in our minivan latches and we continue to believe that today.

JAMES WALKER: *[voice-over]* Without admitting a safety problem, the company offered to replace the rear latch on four million Plymouth, Dodge and Chrysler minivans. It was not a government ordered recall, but a voluntary service action.

COMMERCIAL: Your concern is our concern. So for your peace of mind, we will replace your 1984 through '94 lift gate latch with a stronger latch free.

JAMES WALKER: *[voice-over]* Remember, it was just this past March that Chrysler made the offer. But according to this man, Paul Sheridan, Chrysler had known for years that it had a safety problem with the latch.

[interviewing] How long has Chrysler known about this?

PAUL SHERIDAN: Well, I'm going to say Chrysler has known about this for at least the last four to five years. I became aware of it in a direct sense in 1992.

JAMES WALKER: *[voice-over]* Why should he know the inner workings of Chrysler? Because he was there, on the inside, for 10 years. For nearly two of those years, until late last year, Paul Sheridan was chairman of Chrysler's minivan safety team. When we spoke to him in March, he told us what his safety team had learned about the rear latch.

PAUL SHERIDAN: In minor accidents, the latch fails, the hatch opens and occupants are being ejected out of the back of the minivan. This causes serious injury and, unfortunately, in some cases, it has caused death.

JAMES WALKER: *[voice-over]* But despite what Sheridan said Chrysler knew, this March, the company still maintained publicly that the latches were safe. The auto maker sent out letters to minivan owners blaming emotional media coverage for the controversy and they reassured owners "there has been no formal determination that a safety defect exists". Edna Benziger, *[sp?]* from Bronxville, New York, says the letter gave her no cause for alarm.

EDNA BENZIGER: I really didn't think it was a real safety issue. I thought it was just a small part of the lock system that was defective that we would just replace. But when they told me they didn't have the parts, they didn't tell me there was an urgency, either. They said call back in three months.

JAMES WALKER: *[voice-over]* Months went by and the latches still were not available. The reason, according to Chrysler, engineering delays. Meanwhile, Chrysler had set up a telephone hot line. Operators were given this script. When asked why owners should feel safe, the operators were instructed to say, "There is no defect with the current latch. Owners can best protect themselves by using seat belts at all times." But seat belts did nine-year-old Brandon Auer. His parents, Donna and Brian, were among minivan owners who say they had no safety concerns after receiving the letter from Chrysler.

DONNA AUER: They implied there was not really a safety concern, that they were doing it just for the peace of mind of their valued customers. So we didn't think that our family was in danger.

JAMES WALKER: *[voice-over]* Just last month, more than five months after Chrysler insisted it's latch was safe, the Auers were driving their 1989 Plymouth Voyager on this Illinois road. Both of their sons, they say, were wearing seat belts— Alex in the middle seat, Brandon in the rear. A car ran a stop sign and slammed into the van, propelling it into this corn field.

BRIAN AUER: Donna yelled for me to get Brandon and she would get Alex and I turned around and looked and my gate was open and my rear seat is gone and I yelled, "Oh my god, Brandon's gone."

JAMES WALKER: *[voice-over]* Brandon was ejected. His mother found him at least 58 feet from the van. He was still buckled into his seat.

DONNA AUER: He was slumped over in his seat and I undid his seat belt and there were two people there already and we laid him down on the ground and they started CPR on him immediately.

JAMES WALKER: But it didn't do any good?

[voice-over] A corner's jury concluded Brandon was killed because he was ejected due to the failure of the van's latches. This summer in Dallas, David Evercrombie *[sp?]* says he asked his local Chrysler dealer about the new latch.

DAVID EVERCROMBIE: And I said, "When are they going to replace the latch?" and he said, "They haven't manufactured it yet and really, it's not that big a problem."

JAMES WALKER: It's safe to drive was your impression.

DAVID EVERCROMBIE: It's safe to drive, yeah, and if it wasn't, why would they let me go?

JAMES WALKER: *[voice-over]* Evercrombie set out on a long trip with his fiancee, Lynn Jones, *[sp?]* and her family. It was this past July, nearly four months after

Chrysler announced the offer to replace the latch. In the New Mexico desert, Lynn, who was driving, lost control of the van. Police say the rear struck this guard rail and the van rolled over. Five passengers who were not wearing seat belts were ejected, including Lynn's son Mark.

DAVID EVERCROMBIE: I remember just being shot straight out the back of the van. I was just immediately thrown onto the pavement and skidded about 15 feet, 20 feet.

JAMES WALKER: *[voice-over]* Lynn's sister, according to police, was ejected, too. She lost an arm. Her mother, who was also ejected, was killed. Evercrombie, his fiancee and her family are suing Chrysler.

JOAN CLAYBROOK: *[sp?]* Well I believe that this latch is unsafe. It's a threat to the public.

JAMES WALKER: *[voice-over]* Joan Claybrook is president of Public Citizen, a consumer advocacy group. She once headed the National Highway Traffic Safety Administration, NHTSA, the same agency at the Department of Transportation that permitted Chrysler to conduct a less urgent service action instead of a safety recall.

JOAN CLAYBROOK: The Department of Transportation allowed this to happen. All this delay and dilly dally and letters that deny that this is a safety hazard and hot lines that deny there's a safety problem are examples of what happens when you make the first mistake in the very beginning, which is to allow Chrysler to call the shots.

JAMES WALKER: *[voice-over]* Last month, NHTSA suddenly spoke out In an angry letter about the script operators used on the Chrysler telephone hot line, an official wrote, "NHTSA is very troubled by the tone and substance of the script. We are disturbed by the prospect that numerous minivan owners are being led into a false sense of security about the safety of their minivan latches." As far back as 1990, according to this internal company memo, Chrysler managers considered strengthening the rear door latch. The manager who wrote the memo estimated a stronger latch would cost $.25 to $.50 each. But he felt the weaker latch was not a significant problem and recommended keeping it unless mandated by the government to change it. And Paul Sheridan, who ran Chrysler's minivan safety team, says he urged Chrysler not only to develop a stronger latch, but to add a back up latch.

PAUL SHERIDAN: During early 1993, for example, I made a presentation recommending that the current latch be upgraded to what we call a dual stage latch.

JAMES WALKER: *[voice-over]* And even though every competing minivan, like this one, had a dual stage latch, Sheridan says Chrysler did not want it.

PAUL SHERIDAN: And I was told that to upgrade the latch, especially in terms of it's design philosophy, in terms of going from a single to a dual, to make that drastic a change on the latch would indict all the previous latches. You effectively are admitting to guilt. That's what I was basically told, and so it was on that basis that the safety leadership team recommendation to upgrade to a dual stage latch was rejected.

JAMES WALKER: *[voice-over]* Chrysler turned down our request for an interview. The company has stated that it spent millions of dollars on safety features, but did not think upgrading the latch would increase safety. Sheridan says that last year, Chrysler disbanded his safety team, after company officials repeatedly objected to his recommendations.

PAUL SHERIDAN: I began to recognize that anything negative associated with safety, anything negative at all was to be quieted and hushed.

JAMES WALKER: *[voice-over]* Chrysler fired Sheridan and is suing him for defamation and for allegedly disclosing confidential information. In court papers, the company claims because Sheridan is not an engineer, he was not qualified to make safety engineering suggestions or decisions. Sheridan denies Chrysler's charges and is suing the company. After all this, the question remains, is the latch safe? Just this week, the National Highway Traffic Safety Administration closed it's two-year investigation by concluding it is not safe enough.

RICARDO MARTINEZ, M.D., NHTSA Administrator: *[Wednesday]* The safety of millions of minivan owners and their families is at stake here. This latch needs to be stronger and safer.

JAMES WALKER: *[voice-over]* In a prepared statement to the press after NHTSA's announcement, Chrysler continued to insist it's minivan is safe.

A.C. "BUD" LIEBLER: Minivans as a category are among the safest vehicles on the road and Chrysler's minivans are among the safest of all minivans anywhere and we're going to stand behind the safety of these vehicles.

JAMES WALKER: *[voice-over]* But how can the government claim the latch is not safe enough and yet not order an urgent safety recall? According to Joan Claybrook, Chrysler got off easy.

JOAN CLAYBROOK: They're trying to get the best of both worlds, not admit any liability, not admit they made a mistake, not admit that there's a safety hazard, not really alert the public, but at the same time, do lots of communication to try and show that the company is concerned about the peace of mind, as they say in their letter.

JAMES WALKER: *[voice-over]* Chrysler, which has begun to install the new, stronger latches, now says it will step up it's efforts. Still, the company admits that it could take more than a year to complete the process.

[interviewing] Chrysler says they are fixing the latches.

BRIAN AUER: Well not fast enough.

DONNA AUER: Not fast enough when people are dying. If our son had stayed inside the van, there's no doubt he would have walked away from the accident just like the rest of us did. So how can they say there's not a problem?

HUGH DOWNS: James, if the government has determined that these latches are not safe enough, why

hasn't it ordered a recall?
JAMES WALKER: Well the government says that Chrysler could fight a recall in court, delaying production of the stronger latches, and that with this agreement, the stronger latches are being installed. But I must tell you that we called around to some dealerships today which did not have them.
HUGH DOWNS: Now what are the owners of these minivans and their passengers supposed to do?
JAMES WALKER: Well, first of all, if you have a '95, '96 model minivan, no problem. They've got the stronger latches. If you have an older minivan, the suggestion is this— wear seat belts at all times. Double check that rear seat to make sure it's properly installed and finally, even though the number of ejections is statistically rare, perhaps maybe you shouldn't use that last seat.
HUGH DOWNS: They may be a statistical rarity, but if it happens to you, it's 100 percent and that's rough. Thank you James.
BARBARA WALTERS: Well later in the program, the continuing saga of the Holton family, whose twin girls shared one body. But next, you've probably told your kids, don't follow the crowd. But now you'll see how tough that can be. Standing up to the crowd can be a very lonely business, as this Jewish teenager found out. John Stossel has her provocative story, after this.
[Commercial break]

Standing Alone

BARBARA WALTERS: Now a controversy that could ignite a hot debate in your house. It's about a teenage girl who stood up to the crowd, who held to her beliefs in the face of intense pressure to give in. Her parents were proud. Her school community was outraged. As John Stossel guides you through what became a delicate dilemma, ask yourself, whose side would you take? In this country, should one discordant voice be heard over the harmony of so many others?
JOHN STOSSEL: *[voice-over]* This is what the conflict is about— beautiful music that talks about god. Some people say that when this Mormon choir director asks public school kids to sing songs that mention god, it's like telling them to pray, and that's illegal. It's not surprising that this conflict has come up here. Utah is an unusual state in that most of the population is Mormon.
[on camera] In fact, many came here to Salt Lake City because they were persecuted in other parts of the country because they were different. So it's interesting that in this case, some people are saying it's the Mormons who are being intolerant.
ERIC BAUCHMAN: What you're talking about is a theological national socialism of religion in public schools. These are not neo-nazis, these are theo— nazis and they're just as dangerous as their predecessors in Germany.
JOHN STOSSEL: *[voice-over]* The people Eric Bauchman's upset about are the Mormons who dominate Utah's high schools. The controversy began a year ago, when Bauchman's 16-year-old daughter, Rachel, joined the choir at West High in Salt Lake City.
RACHEL BAUCHMAN: Well I started noticing, as soon as received our Christmas repertoire, a preponderance of Christian religious devotionals and—
JOHN STOSSEL: Like?
RACHEL BAUCHMAN: Pieces which contained lyrics such as "All believers are heaven-bound", meaning if you don't believe in Jesus, then you're not going to heaven. Things like, "Jesus is my savior, he's my king."
JOHN STOSSEL: Why is that a problem?
RACHEL BAUCHMAN: I can't identify with kids singing "Jesus is my savior" when Jesus isn't my savior.
JOHN STOSSEL: *[voice-over]* Jesus isn't her savior because Rachel is Jewish, and although she has no problem singing some Christian songs, she says she was uncomfortable singing mostly Christian music. She wanted other religions represented. She talked to her parents about it.
CHERYL BAUCHMAN, Rachel's Mother: If you're going to praise Jesus, if you're going to praise god, it doesn't matter what religion you are, then you should be able to do it, you should do it in your church, your synagogue, your mosque, a meeting hall, but not in a public school where a child is— has to sit there for an hour and a half every other day and constantly be brainwashed.
JOHN STOSSEL: *[voice-over]* The a capella choir is widely respected in Salt Lake. Rachel had to audition to get in and she was honored to be selected. She became one of the few non-Mormon members of the choir. They performed in auditoriums and churches around town.
ERIC BAUCHMAN: The first concert was held at the First Presbyterian Church. I didn't mind the fact that there were two crucifixes in the background. However, the majority of the songs that Rachel's a capella choir class sang in that first concert were Christian devotional songs.
JOHN STOSSEL: Nobody else complained.
ERIC BAUCHMAN: Nobody else wanted to complain. Rachel approached other kids and they said that they were afraid to.
JOHN STOSSEL: *[voice-over]* Few wanted to challenge Richard Torgerson, *[sp?]* the choir director. He's led the choir for 10 years and made it successful. A deeply religious man himself, many members of the choir say he's been an inspiration to them.
MAIJA-LIISA PHIPPS, Choir Member: Mr. Togerson has been a big help to me in my life. He's been there for me at every— he—
JOHN STOSSEL: How did he inspire you?
MAIJA-LIISA PHIPPS: Just through his music. He was just— he just showed you how much he loved what he was working with and he loved the music so much and he tried to get kids to show him what a spectacular experience it is.
JOHN STOSSEL: Now remember, one of America's founding principles is religious freedom. The Bill of Rights was written to make sure the government

ABC News 20/20 147 Columbus Avenue New York NY 10023 (212) 456 2020

28 March 1995

Courtney E. Morgan
Michael S. Mazur
Chambers Steiner
1490 First National Building
Detroit, MI 48226

Dear Messrs. Morgan and Mazur:

On Friday, March 24, 1995, I faxed and sent a letter to Rick Deneau at Chrysler. In the letter we asked for an interview regarding:

> "overall safety record, alleged problems with rear latch doors and injuries alleged to be caused by such problems, and issues raised by Paul Sheridan, formerly of Chrysler."

Should we need any follow-up response from you or Mr. Sheridan after the interview I am hoping we can call on you.

Sincerely,

Allan Maraynes
Senior Investigative Producer

TAB 9

Article View

THE WALL STREET JOURNAL.

Article 36 of 64

Chrysler Claims U.S. Uses ` Flawed ' Test on Minivans

02/01/95
The Wall Street Journal
Page A4
(Copyright (c) 1995, Dow Jones & Co., Inc.)

HIGHLAND PARK, Mich. -- **Chrysler** Corp. yesterday accused the federal government of using a " **flawed** " crash test that it said was specifically designed to make the rear door of the **Chrysler** minivan spring open.

The National Highway Traffic Safety Administration has been privately urging **Chrysler** to recall voluntarily more than four million minivans and replace the rear latch, according to people within the agency. NHTSA has calculated that about 25 people were killed in crashes when the rear door of a **Chrysler** minivan opened. In nearly all the deaths, the victims were ejected from the vehicle, according to NHTSA.

However, **Chrysler** maintains that its minivan is one of the safest vehicles on the road. The reason more people have been ejected from **Chrysler** minivans, the company says, is that **Chrysler** has sold more minivans than other manufacturers.

"We have told NHTSA that the [government] test is **flawed** because they devised the test specifically to cause a liftgate opening on a **Chrysler** minivan," **Chrysler** said in a statement.

NHTSA officials couldn't be reached for comment last night.

Return to Headlines

Copyright © 1998 Dow Jones & Company, Inc. All Rights Reserved.

Number of Latch/Striker Related Liftgate Openings Per 1,000 Crashes

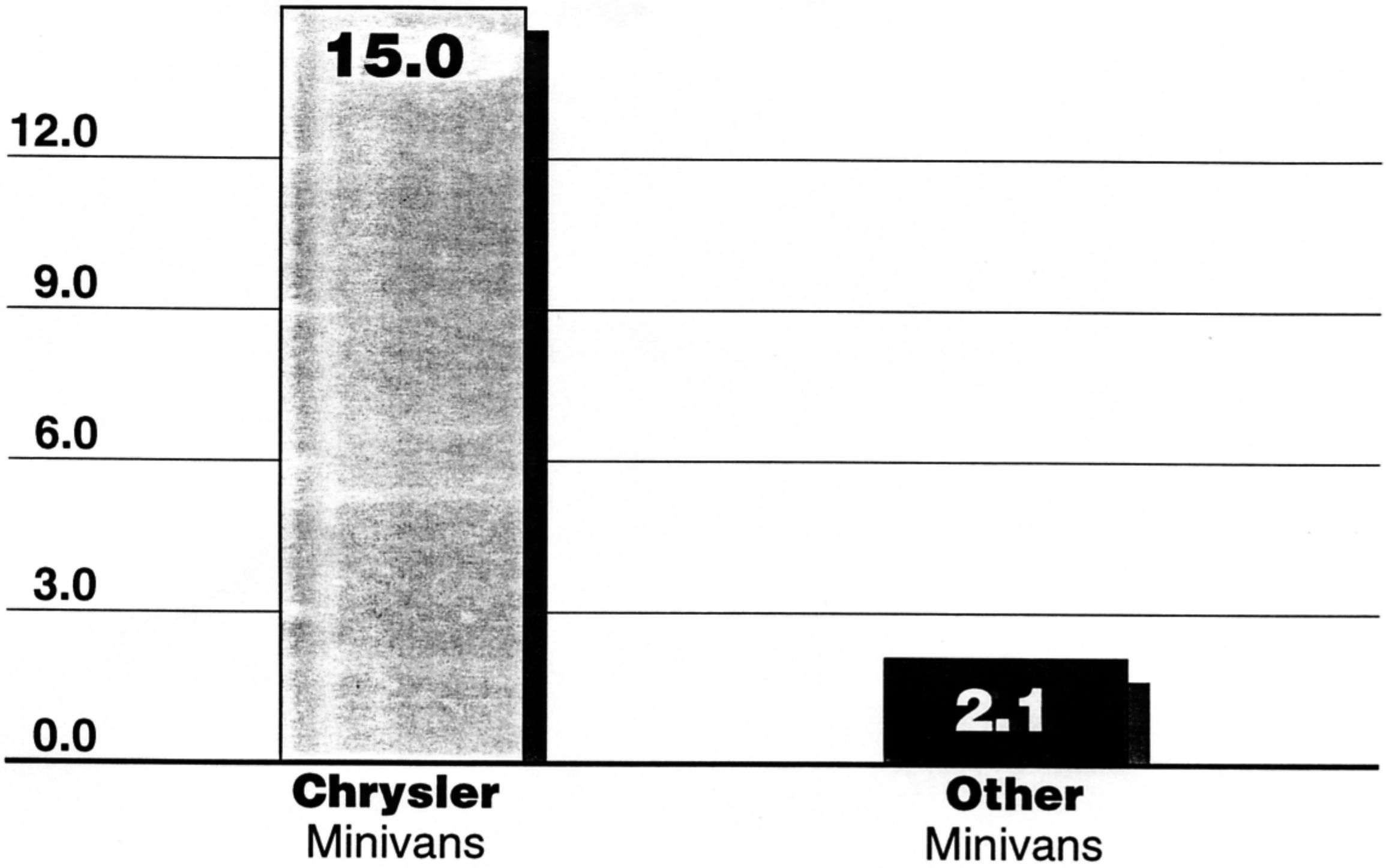

Table 29. Weighted Number of Latch/Striker Related Liftgate Openings for Minivans in Crashes: NASS; 1988-94

Vehicle Type	Total Number of Crashes	Total Crashes with Liftgate Opening from LATCH Failure Mode	Number of LATCH Related Openings per 1,000 Crashes
Chrysler Minivans	114,619	1,715	15.0
Other Minivans	151,846	323	2.1

NHTSA Concludes: "The above data demonstrate that the latch failure rates for Chrysler minivans is higher than those of other minivans. This is consistent with field data and with ODI's FARS analysis of unknown ejection paths."

Source: Table 29, Engineering Analysis EA94-005 Chrysler Minivan Liftgate Latch Investigation Engineering Analysis Technical Report 10/25/95.

7-13-1996 : DETROIT FREE PRESS

rofits; workers likely to share

conditions in the U.S. where Chrysler's sales ed," Chrysler said in its report to the SEC.

ant weakening of eco- ns in the U.S. and Cana- uption in production as or disputes could result g of third-quarter 1996

planned production."

But the automaker again raised its estimate for total 1996 U.S. auto industry sales, this time from 15.3 million to 15.5 million vehicles. Chrysler had nudged up the estimate by 200,000 units in April after better than expected first quarter results were posted.

The average vehicle sales price for the second quarter was $18,649 after rebates, $451 more than in the second quarter of 1995, Chrysler told the SEC. Gross profit per vehicle averaged $1,905, Valade said.

During the second quarter, rebates averaged $625 per vehicle, compared with $640 in the first quarter and $1,035 a year ago. They should get much higher for the rest of the year, said Jim Holden, Chrysler executive vice president for sales and marketing.

Holden also said he expects Chrysler to hold most of the market share it gained in the second quarter. Its share rose from 16.3 percent in the first quarter to 16.7 percent in the second.

2,119 minivan latch openings outlined in Chrysler documents

Engineers debated ways to fix problem

BY JANET L. FIX
Free Press Washington Staff

Liftgate latches on Chrysler's popular minivans popped open 2,119 times while being transported from factories to dealers in 1994, according to internal Chrysler documents made public Friday by a Texas judge.

A state court judge in Palestine, Texas, ordered the documents released after a lengthy hearing stemming from a suit against Chrysler on behalf of a Texas teenager who became a paraplegic after a minivan accident.

The documents detail how Chrysler for years debated ways to strengthen the latches before finally agreeing last year to replace them on 4.5 million 1984 to 1995 minivans.

And they seem to contradict some public claims by Chrysler, which continues to defend the latches as safe and effective.

Despite assertions by Chrysler Thursday that there had been only 200 latch openings in transit, notes from an Aug. 23, 1994, brainstorming session with Chrysler engineers indicate more than 2,000 openings. Between May and August 1994, engineers had reports of 2,119 latch openings in transit, the bulk of which — 1,743 — involved minivans transported by railroad.

The liftgate latches popped open repeatedly — even after minivans were driven off the delivery ramp and into a parking lot, the documents indicate. In some cases, latches popped open in transit several times.

Under possible root causes, the engineers included: "the latch itself," sabotage, drivers failing to close the door properly, and "Ford slipping driver money" — although the latter was noted to be only a rumor.

Chrysler spokesman Rick Deneau blamed the latch openings during transit on the fact that the minivans were tied down, robbing them of their normal suspension.

Deneau said Chrysler wasn't aware of thousands of openings. "The engineer who looked into the transport issue told me he recollected 150 to 180 latch openings in transit," Deneau said.

A Dec. 21, 1994, memo noted "some 220 reports of liftgate openings in shipping." But that memo conceded that it is "also likely that some instances went unreported" and not all reports had been documented. Assuming there were 300 incidences, the memo says, less than 0.2 percent of minivans transported had popped open.

Federal safety officials say more than 35 people have died after the latches popped open in crashes and the victims were ejected from the vans.

But federal safety officials did not declare the latches defective. Instead, they agreed to let Chrysler replace the latches in a controversial service campaign.

MICHIGAN STOCKS

Stock	% YTD	Last	Change
AJLn	+ 6.4	26¾	– ¾
AdcoTech	+ 23.2	8½	– ⅛
AgreeRlty	+ 24.8	18¼	+ ¼
AlldDpt	– 33.3	2⅛	– ⅛
AlliPesDn	– 27.7	4¼	
AmDentl	+227.3	2⅞	– ⅛
Amerfwd	+ 58.1	6⅛	– ⅛
AmervAs	– 18.2	25⅛	– ⅜
AmveyJ	+ 13.2	23½	– ¼
ArborDrg	– 8.3	19¼	+ ¼
Autocam	– 27.7	10⅛	– ⅜
BankWest	+ 13.6	11½	
Borders	+ 72.9	31⅛	– 1⅜
CFSB	– 5.8	38¼	– ½
CMSEner	+ 3.3	36⅝	+ ⅛
CMSGn	– 6.6	17⅝	
Cadelnd	+138.9	7⅛	
CastBc		9⅝	
Catterman	+ 44.4	1	
ChemsEnt	+ 36.3	21⅛	+ ⅜
ChelseaP	– 6.6	22⅝	
ChmFin	– 15.2	34⅜	– 1⅛
Chldrmen	– 38.9	6¼	+ ⅛
Chrysir	+ 2.0	36¼	– 1⅛
CitizBkg	– 7.1	27⅛	– ⅜
CodeAlarm	– 24.0	6¾	
Comerica	+ 6.9	45⅛	– ⅛
Comsurer	+103.8	38¼	+ 1⅛
Comairs	+ 5.8	27½	+ ⅜
FdScrw	+ 23.3	26	
FirstWstr	– 15.4	16½	
FrstetAm	– 0.6	44⅛	– ⅛
FstMich	+ 15.6	30½	+ ¼
FordMo	+ 6.5	38⅛	– ⅜
Foremost	+ 10.8	56¼	
FrntStt	– 17.2	10¼	
Gentex	+100.0	4	– ⅛
Gelman	– 14.8	21	– ⅜
GM	– 8.7	48¼	– 1
Gentexs	+ 65.9	18¼	
Handlm	+ 8.7	6¼	
HortonCp	– 12.0	28⅛	
Howtn	+ 27.2	31	
IndsBnk	+ 9.3	29¼	+ 1
Interface	– 41.2	7½	
JPE	– 5.1	9¼	
Jacbsn	+ 28.6	11⅜	– ⅛
Kmart	+ 54.4	11	+ ⅛
Kellogg	– 1.9	75¼	+ 1½
KellyA	+ 10.8	30⅛	+ ⅜
KrasdV	– 13.7	15	+ ⅜
Kysor	+ 8.5	26⅛	+ ⅛
LaZBoy	– 4.9	29⅛	+ ⅛
LearCorp	+ 12.9	33¼	– ⅜
MCN	+ 7.0	24⅜	+ ⅜
MSB Fncl	– 9.2	16½	
Meten	+ 17.2	14½	+ ⅛
Mentrn	– 12.5	1⅜	
OIS	– 12.9	3⅛	+ ⅛
OldKent	– 1.6	38½	+ ⅛
OmniHlt	+ 5.6	28⅛	– ¼
Ottawa	+ 4.0	16¼	– ⅛
PICOM	+ 2.3	22	
Perceptrs	+ 38.2	30¼	+ ¼
Perrigo	– 10.5	10⅛	+ ¼
Pinnacle	+ 19.7	20¼	
Pulte	– 24.9	25¼	+ ¼
ecRander	+ 42.9	⅜	+ ⅛
RedBcn	+ 5.8	11⅜	+ ⅛
Rouge	– 7.9	21⅞	– ⅛
SJS Bcp	+ 1.9	28⅛	
SPX Cp	+ 51.2	24	– ⅜
SeaCms	+ 56.7	28⅛	– ⅜
Scherer	– 13.2	45⅜	
Secm	– 15.9	7⅛	– ⅛
Shoreline	+ 24.3	22	
Sltrnlnd	+ 1.4	9⅛	+ ⅛
Somanetic	+223.5	7¼	+ ⅛
Sothbys	– 2.6	13⅞	– ⅛
SMichG	– 6.7	17	
SpartMot	– 25.2	7⅛	
Spartan	– 8.6	4	– ⅛
StdFedBnk	– 2.2	38½	– ⅛
Stryker s	– 20.0	21	– 1
SunCmts	– 2.4	25⅛	– ⅛
SureShot	– 4.3	3⅜	– ⅛
Taubmn	+ 8.8	16⅜	– ⅛

TAB 10

Rank(R) Database Mode
R 2 OF 6 PAPERSMJ Page

U.S. Agrees to Disclose Chrysler Minivan Crash Test Data
Courts: Lawyers for the government say they will release a videotape and other materials involving the safety of rear-hatch latches on the vehicles.

Los Angeles Times (LT) - TUESDAY August 29, 1995
By: DAVID WILLMAN; TIMES STAFF WRITER
Edition: Home Edition Page: 12 Pt. A
Word Count: 893

TEXT:

WASHINGTON - Under pressure from an activist's lawsuit and facing a skeptical federal judge, government lawyers announced Monday that they intend to make public a videotape of crash tests focusing on the controversial rear-hatch latches of Chrysler minivans.

The agreement to release the videotape and other materials by the end of October was revealed in court here by lawyers representing the government and a safety consultant who has sued an agency of the Department of Transportation to obtain the data.

The judge overseeing the dispute over release of the materials also questioned why none of the latches have yet been replaced. Chrysler and federal transportation officials had announced March 27 that the company, while maintaining that the original latches are safe, would replace the components at no cost to concerned vehicle owners. But the new latches are not yet available to minivan owners.

"Why in the world has it taken four to five months to get a prototype of these latches when you know full well that it takes months (longer) for consumers to actually get their vans in, to get the repairs made, for Chrysler to do what it's supposed to do?" U.S. District Judge Gladys Kessler asked a lawyer for the government.

"What in the world has taken so long, while these vehicles are on the road, being driven by families with children in those vans?" she added.

Failure of the latches may have contributed to the deaths of 37 people and injuries to 76 others, according to investigative reports compiled as of mid-July by the federal Department of Transportation.

Patricia Russotto, a lawyer for the department's National Highway Traffic Safety Administration, told Kessler that the replacement latches still must undergo physical testing to ensure their adequacy.

A Chrysler spokesman said last week that in September, the company hopes to begin contacting the first of more than 4 million van owners who would be eligible to have rear latches replaced. A Chrysler lawyer earlier had argued against release of the government's videotape, saying that the result would be a flood of demands for new latches.

(C) 1995 LOS ANGELES TIMES ALL RTS. RESERV.

Lewis H. Goldfarb, assistant general counsel for Chrysler, said that the company's efforts to replace the latches have been slowed by the difficulty of designing a related, remote-release component that is standard in the 1990s models. Kessler, he said, "really didn't understand" the design issue.

As evidenced by Kessler's comments, the dispute over the status of the videotape and other government investigative data has refocused attention on the Transportation Department's compromise agreement with Chrysler in March.

Safety activists have criticized the Clinton Administration for deciding not to declare the latches defective or to seek a formal recall.

In the event of a recall, an auto maker is subject to increased penalties and vehicle owners are informed, unambiguously, that a safety problem exists.

Under the compromise agreement announced in March, Chrysler has stated in television and print-media ads that the original latches are safe and that the government has not found otherwise but that replacements would nonetheless be offered.

In an interview, Philip R. Recht, a presidential appointee who is deputy director of the highway safety administration, said that the agreement with Chrysler was intended to avoid the delays of protracted litigation.

"We have got to keep our eye on the long-term goal here, which is safety," Recht said.

Yet in court Monday, Kessler took issue with the agency's handling of the latch-replacement matter. Kessler said that when the highway safety agency announced the agreement with Chrysler in March, no indication was given that it would take so long to accommodate minivan owners seeking to replace their original latches.

By the time Chrysler begins replacing the first of the latches, Kessler said, "we are talking about an eight- or nine-month delay between the time of an announcement that got a whole lot of publicity--I think it's fair to say favorable publicity, for the government and the manufacturer--and the time in which any consumer can actually take advantage of that offer in order to make their vehicle safer for themselves and their family. . . . I find that a bit disturbing.

"I think the (highway safety administration's March 27) press release certainly suggested something different to the public and that is of great concern to me," the judge added.

As for the videotape and the other investigative materials, lawyers for the highway safety administration had contended that the data was exempt from disclosure under the Freedom of Information Act because the agency has not formally closed its investigation of the minivan latches. The exemption

(C) 1995 LOS ANGELES TIMES ALL RTS. RESERV.

they cited allows an agency to withhold data if disclosure "could reasonably be expected to interfere with enforcement proceedings."

Russotto said that the government expects to close its investigation by mid-October.

Katherine A. Meyer, a lawyer for Ralph Hoar, the consultant who sued to force disclosure of the investigative materials, reiterated Monday that she believes the government's earlier compromise agreement with Chrysler marked the end of that investigation.

The materials Hoar is seeking, in addition to the videotape, include the "analysis, conclusions and recommendations" of the highway safety administration's staff. The agency showed all of the data to Chrysler's lawyers on Nov. 17, 1994.

Kessler said that if the government does not make public the videotape and the other materials by Oct. 30, "then I am certainly anxious for this case to proceed quickly."

DESCRIPTORS: CHRYSLER CORP; AUTOMOBILE SAFETY; UNITED STATES--GOVERNMENT; VIDEO RECORDINGS

Copyright (c) 1995, Times Mirror Company
(C) 1995 LOS ANGELES TIMES ALL RTS. RESERV.

TAB

11

LAW OFFICES

CHAMBERS STEINER

A Professional Corporation

1490 FIRST NATIONAL BUILDING
DETROIT, MICHIGAN 48226-3592

Telephone (313) 961-0130
Fax (313) 961-8178

KALAMAZOO OFFICE
7040 STADIUM DRIVE
KALAMAZOO, MICHIGAN 49009
Telephone (616) 375-4300
Fax (616) 375-4077

ROSEVILLE OFFICE
25235 GRATIOT AVE.
ROSEVILLE, MICHIGAN 48066
(810) 773-3455

JOHN F. CHAMBERS
SANFORD L. STEINER
MICHAEL S. MAZUR
ALEXANDER T. ORNSTEIN
DARRELL M. AMLIN
COURTNEY E. MORGAN
JEFFREY T. MEYERS
ANGELA J. NICITA
LOUIS G. COREY
JOHN I. KITTEL
RICHARD J. CAROLAN
MICHELLE J. HARRISON
PATRICIA A. MURRAY
CHRISTOPHER S. HARTMAN
FRANKLIN J. CHAMBERS
MARTIN R. STURM
KEVIN P. BURCH
DOUGLAS A. MERROW
LISA A. KLAEREN
FRANK B. MELCHIORE
DANIEL C. BROWN

July 14, 1995

Thomas G. Kienbaum, Esq.
500 Woodward Ave., Suite 4000
Detroit, Michigan 48226-3406

Re: Chrysler vs. Sheridan

Dear Mr. Kienbaum:

I am in receipt of your most recent correspondence regarding the magistrate's recommendation and our providing of information to you regarding office materials. I do not know how you could have reasonably concluded from the correspondence that was forwarded to you that we are of the opinion that there is no basis to conclude that evidence may have been tampered with in this case. Indeed, the anxiety exhibited by the fact that you immediately faxed your reply to me suggests that in reality you hold the opposite opinion. Due to the necessity of my attendance at federal court in Wichita, Kansas this week, I did not believe that I was going to be able to comply with the July 14, 1995 deadline. Now, it appears that we are in a position to comply.

The information provided hereunder is based upon our limited and restricted ability to review materials which were allegedly seized from Mr. Sheridan's work space. That review is neither complete, nor did it have as its purpose the ferreting out of all details of evidence tampering which may exist. Lack of inclusion of any specific item in this list shall not be taken as an admission of the authenticity of such a document or other tangible item.

The document submitted by the plaintiff entitled, "Confidential Inventory of Material from Paul V. Sheridan's Cubicle at the Chrysler Technology Center", dated March 16, 1995, has numerous general inconsistencies and inaccuracies based on defendant's knowledge and cursory examination of the actual inventory:

1. This "inventory" fails to list and does not contain the following files:

- Liftgate Latch - General
- Liftgate Latch - Competitive
- Safety Leadership Team - Meeting Minutes
- Safety Leadership Team - Preliminary
- Liftgate Latch - Safety Office
- H. G. Cook Study
- FMVSS 206 - General
- Seat Back Strength - General
- Seat Back Strength - FMVSS 207 Specifications
- Offset Impact - General
- Rear Crash Survivability - General
- FMVSS - 301
- Side Crashworthiness Issues
- FMVSS - 214
- Bumper Issues - General
- NS-Body Bumper
- Taillamp Studies - Zarowitz
- Amber Taillamp - NS-Body
- Rear Seat Headrest - General and Zarowitz
- Back-up Light - General

2. The "inventory" lists files but inaccurately portrays their original/current contents:

- Box #1 - File "NS Liftgate System". This file contained subfiles such as "Customer Injury", "Saginaw", et al. Also contains photographs that were originally in the "Liftgate Latch - General" file which is missing per #1 above. (see page 4 of inventory).

- Box #1 - File "NHTSA News" contains only half its original contents (see page 4 of inventory).
- Box #1 - File on "Muth Technologies" not listed; subfile "RSZ" not listed (see page 4).

- Entry on page 8 of inventory indicates that a file contained "correspondence for Dr. Detroit Motorsports". No correspondence was ever sent to Mr. Sheridan's Chrysler office for Dr. Detroit Motorsports, nor was any on file at that location.

3. The "inventory" identifies files and file locations by box number but the location identified was found to be inaccurate.

4. The "inventory" fails to explain/list file materials that were found in the actual inventory by defendant:

- Documents relating to FMVSS-208 dated December 21 were found in Box #1 in file "NS-Restraints". This file is not listed on inventory. (see page 4)

5. This "inventory" fails to accurately explain/list documents allegedly found in the cubicle, as described during the deposition of plaintiff's investigators.

6. The "inventory" fails to list files that were found in the actual inventory.

7. The "inventory fails to list/identify location of specific video tapes:

- Environmentally Safe Oil Changes
- Formula SAE
- IIHS Bumper Tests
- Etc.

8. The "inventory" fails to accurately list contents of computer disks and computer hard drive.

This response is not complete. Further examinations of inventory is still pending. Preliminary examinations cover documents listed through page 18, but not Box #7. Document listings from page 18 through 39 have not yet been examined.

Sincerely,

Courtney E. Morgan, Jr.

CEM/mn
cc: George Googasian, Esq.
(Via Facsimile)

TAB

12

THE WALL STREET JOURNAL INTERACTIVE EDITION

FROM THE ARCHIVES

The Wall Street Journal Interactive Edition -- November 19, 1997

Why One Jury Delivered a Big Blow To Chrysler in Minivan-Latch Case

By MILO GEYELIN
Staff Reporter of THE WALL STREET JOURNAL

Two months before Sergio Jimenez II was thrown from the back seat of his parents' 1985 Dodge Caravan and killed three years ago, a group of production experts at Chrysler met to review recommendations that might make future minivan models more competitive.

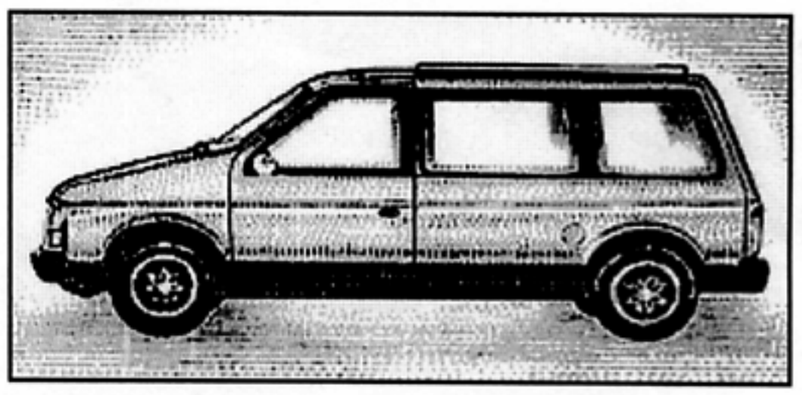

At the top of the list was safety. Chrysler's rear-door latches appeared to be failing sometimes, even in low-speed accidents, allowing the lift-up doors, or liftgates, to pop open and passengers to be hurled out. Why not make the latches stronger, like those on a later minivan model, the Ford Windstar, suggested Paul Sheridan, then head of Chrysler's Minivan Safety Team.

"That ship has sailed," the minivan's top production engineer replied, according to Mr. Sheridan. "We told you that last time. Next subject." The engineer says he was misunderstood.

Link

How a Tiny Law Firm Won a Mammoth Case

Last month, a federal jury in Charleston, S.C., awarded Sergio's parents and sister $262.5 million in damages, including $250 million intended to punish Chrysler Corp. After deliberating 2 1/2 hours, the jury found that Chrysler's negligent design and testing of the latch had caused six-year-old Sergio's death.

Narrow Focus

The award, which Chrysler intends to appeal if the judge doesn't set it aside, set a record in the auto industry and shocked Chrysler. The company strongly denies any defect involving the latch and maintains that crash statistics prove its minivans are among the safest on the road. At the month-long trial, it argued that Sergio was thrown out a side window, not the rear door. It also contends the judge erred in narrowing the trial's scope so that jurors couldn't hear certain testimony, such as that Sergio's mother may have caused the accident

by running a red light and that Sergio wasn't wearing a seatbelt.

"The magnitude of the verdict suggests that something really went wrong with the process of the trial," says Kenneth Gluckman, Chrysler's top in-house lawyer for product-liability lawsuits.

Two years ago, the National Highway Traffic Safety Administration calculated that Chrysler liftgates pop open in collisions more frequently than its competitors'. It said the rate of passenger ejections was nearly double that of the rest of the minivan industry. Facing a possible recall, Chrysler agreed to replace the latches on 4.3 million minivans it had built since 1984. So far, Chrysler has spent $115 million notifying minivan owners and installing new latches on about 61% of its minivans on the road that had the old-style latches.

More Coming

The threat of high-profile safety litigation is one the auto industry has lived with for decades, from Pinto gas tanks to sudden-acceleration claims to allegedly unstable sport-utility vehicles to GM pickups with side-mounted fuel tanks. Thirty-seven people have been ejected from Chrysler minivans and killed, according to the NHTSA. That is more than the 26 who died from burns in Ford Motor Co.'s Pinto but fewer than the 168 fatalities in General Motors Corp.'s C/K pickup trucks with side fuel tanks.

The Chrysler litigation is potentially more volatile because many of the suits involve children. "Basically you're gambling when you take one of these to trial," says Clarence Ditlow, a consumer advocate in Washington. "If your judgment is wrong, you come up with verdicts like in South Carolina. The potential amount of the award is so large that even if only 25% of the cases come up winners, you're still talking big money."

Arrayed against Chrysler is an alliance of plaintiffs' lawyers who have been jousting with the company for two years to gain access to internal documents and depose witnesses. Leading the Jimenez case was the Washington firm of Ross, Dixon & Masback, notable because the firm normally specializes in defense work. Chrysler currently faces about 40 injury or wrongful-death suits involving the latch, and more are expected. In the only other one to go to trial, Chrysler won when the jury found that the latch was defective but the victims fell out a side window.

While the damage award in the Jimenez case is likely ultimately to be reduced, the case raises concerns that seem sure to haunt the nation's No. 3 auto maker in future trials.

Among them:

- Chrysler marketed the minivan since the early 1980s as a family vehicle, but used a latch variation in early models that the rest of the industry had abandoned for passenger doors in the 1960s. The company altered the latches for new vehicles in 1988 but didn't inform owners of models already on the road, including the Jimenez family. And the modified latches still didn't meet the federal safety standard for passenger doors, a

standard that Chrysler's competitors either met or came closer to.

- Chrysler destroyed early films of minivan-crash tests, design documents and computer records, actions the company says are routine.
- Engineers considered an additional method of strengthening the latches on new models for as little as 25 cents apiece in 1990 but didn't do so because the move would have undercut Chrysler's position with safety regulators that there was no problem with the latches.
- Chrysler tried political persuasion to resist a recall after being warned by NHTSA in November 1994 that "the latch failure is a safety defect that involves children."

Cumulatively, says one of the jurors, the evidence painted a devastating picture of corporate indifference. "We want people to understand why we made the decision we did," says Linda Jordan, a 42-year-old business consultant. "We knew what we were doing. When you speak to a company as big as Chrysler, you've got to speak to them on terms they'll understand."

Chrysler conceived of the minivan, with its huge rear door, or liftgate, in the early 1980s and marketed it primarily to mothers with young children. The doors are latched secure at the bottom of the door frame and swing up and out of the way for ease in loading and unloading. The vans, the Dodge Caravan, the Plymouth Voyager and the Chrysler Town and Country, caught on immediately and helped bring about the company's resurgence. They were widely imitated, but Chrysler continues to dominate the U.S. market.

In the early 1980s, however, the concept was so new that there were no federal safety standards in place for liftgates. Chrysler was left to create its own.

What it came up with was weaker than the standard for passenger doors. Most of the pending lawsuits contend the latches are substandard because they bend or tear loose in an accident, freeing the hatch to pop open. But lawyers in the Jimenez case pointed to another alleged flaw: the design of the latch in early minivans. The company used a claw-shaped fork that latched around a thumb-sized metal post at the base of the door.

The posts, known as strikers, had been manufactured for decades with mushroom-shaped heads at the top. The reason: The impact of a collision could force latches to ride over "headless strikers," popping open the door. And since ejections from vehicles had long been recognized as a leading cause of death in car accidents, headless strikers hadn't been used in passenger doors since the 1960s.

But Chrysler chose to mill off the heads. Engineers believed the head, or flange, might snag cargo, such as grocery bags. Federal regulators required no crash tests on the new latches, and Chrysler performed none.

That was the first of many decisions that would trouble the jury. "I think we all felt that any time you're designing something new to put on a vehicle that you're marketing to a family, you should be

checking out every aspect of what you're doing," Ms. Jordan says.

Missing Reason

Then came Chrysler's decision in mid-1988 to replace the headless striker in new models with a flanged striker. The witness Chrysler used to explain why, a retired body designer, wasn't involved in the decision. "We can't explain the reason for making that change," said Jerome E. Mitchell Jr., who, like most Chrysler witnesses, testified in a videotaped deposition. In a postverdict interview, Chrysler officials still couldn't explain the change.

A midyear design alteration would normally involve stacks of paperwork, proposals and meeting minutes. "It was a number of years ago and those documents simply don't exist any more," Mr. Mitchell said. He testified that he asked the people who were involved in the decision, but no one could recall.

That hurt Chrysler's credibility. "They never could say why they did it," says juror Linda Ward, a 48-year-old secretary who bought her third Chrysler minivan in June to haul around her two grandchildren. "You know they did it for a reason. You know they did it because they felt it was unsafe."

Another problem for Chrysler was that two films of tests involving left-side crashes at Chrysler's proving grounds in Michigan in 1983 were missing. The executive in charge of impact testing at the time, William Shollenberger, testified that Chrysler always filmed its tests and always kept a record of any anomalies in a computer log. But he couldn't explain why films of the two tests had been pulled from the archives, shredded and burned in 1988. Films of tests done at about the same time, involving front-end collisions, were still available. Two lines of data from the log had also been deleted.

Films Destroyed

Mr. Shollenberger said the company routinely destroys test films after five years, unless the vehicle is the subject of a lawsuit. He had no explanation for why films of left-side collisions were destroyed, but not some films of tests performed before and after involving front-end collisions. And two lawsuits involving the latch were pending when the films were destroyed. Chrysler said the tests were irrelevant because they had been done to see how the minivan's fuel tank held up, not its rear-door latch. Moreover, while no one could recall whether latches broke, Chrysler re-enacted the tests for the trial and found nothing wrong.

"That seemed very deceitful to me," Ms. Ward says. "I mean, why would you just lose that certain test in that certain year? I work in a real-estate office, and I know how important it is to save every note and every piece of paper."

By May 1990, regulators at NHTSA were becoming concerned about the crashworthiness of rear-door latches, noting in a letter to all manufacturers that liftgates and hatchbacks tended to fly open in accidents far more frequently than passenger doors. The safety agency asked each company to look at its own crash-test standards

for liftgates to determine whether they should be toughened.

Although some competitors' liftgates also didn't meet the federal standard for passenger doors, all came closer than Chrysler's. Still, the company maintained that an upgrade wasn't needed. Seat belts were the best protection against being ejected from a minivan, it wrote to the agency.

But when Chrysler tested its latch, the results were mixed. In one test, it pulled apart at 1,300 pounds of force, far below the federal passenger-door standard of 2,000 pounds, according to internal records presented by the plaintiffs at the trial. The company assigned senior engineer Henry G. Cook to calculate the cost of meeting the federal standard. His estimate: 25 to 50 cents per latch, plus a one-time cost of $125,000 to retool machinery to make thicker and stronger parts, he wrote in a July 1990 memo. The latches could be modified in 32 weeks, he estimated.

But Mr. Cook recommended against it. "As stated in our response to NHTSA that we do not believe there is a significant problem with liftgate retention," Mr. Cook wrote in July 1990, "I recommend that we continue with the current latch system at least through 1993 unless mandated to change by NHTSA."

The jurors saw that as shortsighted. "I was surprised they didn't go ahead and correct the problem," juror Bennie Rhett says. "I felt like they should have done it," Ms. Jordan says. "I have no idea why they didn't, and they couldn't tell you why."

Slipping Sales

For Chrysler, the latch problem -- and how it ultimately would come to be perceived by jurors -- would only get worse in the early 1990s. While the company was marketing safety as its first priority in national ad campaigns, it was concerned about minivan accidents in which children had been killed. In the Detroit suburb of Mount Pleasant in late 1992, a Chrysler-minivan liftgate had popped open in an accident in which two infants in the rear seat had been ejected and killed.

Mr. Sheridan testified that at the time, when he was a Chrysler planning analyst, the company had another concern: Sales appeared to be slipping because of safety concerns. To attack the problem, he said, Chrysler appointed him as chairman of a 13-member Minivan Safety Team. The group, Chrysler maintained at trial, was assembled to look at marketing concerns about safety that could be addressed in a revamped design for the 1996 minivan.

When it met for the first time in February 1993, Mr. Sheridan said, the Mount Pleasant accident was fresh in the minds of all. An in-house lawyer cautioned the group that no notes should be taken, Mr. Sheridan said, adding that meeting minutes he drafted later and circulated were ordered rounded up and destroyed. And in April 1993, when he recommended to the development team that latches be replaced in existing vehicles, Mr. Sheridan testified, he was turned down.

Any drastic changes in the existing latch, he said he was told by Chrysler's top production engineer for minivans, Chris Theodore, "would indict everything we have done in the field." It was a year later, Mr. Sheridan testified, when he raised the issue again, that Mr. Theodore told him, "That ship has sailed."

Credibility Strategy

Mr. Theodore says he doesn't recall the earlier meeting. As for the remark about the ship having sailed, Mr. Theodore says he wasn't addressing the issue of whether to replace existing latches but rather a question about latches for a coming minivan model.

However, at the trial, Chrysler presented no witnesses to dispute Mr. Sheridan. This is a move, the spokesman says, that the company isn't likely to repeat in any future trial. The defense team, which was led by David Tyrrell of Tampa, Fla., confined itself to attacking Mr. Sheridan's credibility.

Defense lawyers cast him as a disgruntled and dishonest former employee who had no engineering experience. Mr. Sheridan had been demoted on grounds of poor performance and later fired for allegedly leaking crash-test results unrelated to the minivan to a trade magazine, the defense said. Mr. Sheridan says he didn't leak any results.

The jury found him credible. An accomplished race-car builder, Mr. Sheridan had at times received glowing performance reviews at Chrysler. In 1985, he had won the coveted Lee Iacocca Chairman's Award for excellence. And unlike many of Chrysler's witnesses, jurors noted later, Mr. Sheridan wasn't paid to testify.

"I believed every word he said," Ms. Jordan says. "I really did, because I felt like he really didn't have anything to lose."

Jurors also didn't believe Chrysler expert witnesses who said the child must have been ejected through a side window, not the back. Plaintiff lawyers unearthed six crash witnesses, who testified that Sergio was thrown out the back door.

By the time Mr. Sheridan was fired in December 1994, federal regulators were taking a hard look at the minivan latch. A preliminary inquiry had been launched a year earlier after two children had been ejected from a 1992 Chrysler minivan outside Washington, D.C., and one was killed. The police officer who investigated had complained to NHTSA that the impact of the collision wasn't severe enough to justify a liftgate's popping open.

In February 1994, the inquiry had broadened into a full-blown investigation of all Chrysler minivan latches. But by then, Chrysler had already decided to make the latches 50% stronger for models beginning in 1995. The question was whether it should replace latches in vans already on the road as part of a voluntary recall. NHTSA had the authority to request such a recall by issuing a public letter even before it pinpointed the precise defect.

And indeed, asking for a voluntary recall appeared to be the direction

the agency was taking when, in November 1994, it invited a team of Chrysler executives to review data and crash-test films in Washington. Using an overhead projector, NHTSA investigators flashed bar graphs of data comparing Chrysler minivan accident statistics with its competitors'.

Chrysler minivan liftgates, they said, popped open twice as frequently. In two crash-test videos played in slow motion, Chrysler minivans were rammed on the left rear side at speeds of 31 to 37 miles per hour. Each time, the liftgates buckled and tore off at the latch as the vehicles spun violently, hurling unbelted test dummies out the back door. In similar tests of its competitors' vehicles, the doors held. And, in fact, the door also held in a test of a 1991 Chrysler minivan fitted with the strengthened latch.

Political Moves

But Chrysler wasn't persuaded. It countered with a blizzard of its own data challenging the government's. And then, in a move that jurors said disturbed them, the company mounted a campaign in Washington to pressure NHTSA into dropping its voluntary-recall policy.

"If we want to use political pressure to try to squash a recall letter we need to go now," Vice Chairman Tom Denomme told Chairman Robert Eaton and President Robert Lutz in December 1994, according to a memo shown to jurors.

Chrysler's Washington office mobilized, contacting the House Commerce Committee, which oversees NHTSA and where auto makers have an ally in Michigan's Rep. John Dingell, the committee's ranking Democrat, according to correspondence used as evidence at the trial. Chrysler helped committee staffers draft a letter criticizing the recall policy. It was signed by Mr. Dingell and Committee Chairman Michael G. Oxley and sent in January to Richard Martinez, NHTSA's administrator at the time.

Publicly asking auto makers to recall cars because of a suspected defect before an investigation is complete could hurt a company's safety record, the congressmen complained. Instead, why couldn't NHTSA and auto makers agree to a "confidential settlement"?

The letter didn't specifically address Chrysler, and NHTSA says no pressure was exerted. However, in March 1995 Chrysler agreed to replace the latches on existing minivans without acknowledging they were defective or that passengers could be killed or injured in ejections.

Under terms described in one Chrysler document shown to the jury, which the company called a proposed settlement, there would be "no acknowledgment of [a] defect to NHTSA or to owners' and "no acknowledgment of [a] safety problem." In Chrysler's proposal, NHTSA would agree to deny requests by the public for copies of the crash tests. NHTSA denies knowing of any proposed settlement and says its policy is always to block the release of findings, including crash-test films, until its investigations are formally closed and the agency issues a report.

Chrysler maintained throughout the trial that its lobbying effort wasn't aimed specifically at the minivan. "No sir. That absolutely did not happen," said Chrysler's chairman, Mr. Eaton. But the jury wasn't persuaded. "All of that just incriminated them so badly it wasn't funny," Ms. Jordan says. "I just think it was one more piece of the same puzzle. It was very damaging to them. On a scale of one to 10, it was about an eight."

And Mr. Eaton, she and two other jurors who were interviewed agreed, was a terrible witness. Appearing to some jurors as indifferent in his videotaped deposition, Mr. Eaton staunchly defended the old latches and the minivan's safety record. But Mr. Eaton testified that he didn't know why passenger-door safety standards were promulgated, had never reviewed NHTSA's materials regarding the Chrysler latch, didn't know about the Minivan Safety Team, was unaware of whether Chrysler had ever conducted minivan crash tests and had never looked at a latch.

"Every question he was asked, he answered, "I don't know. I don't remember. I can't recall," " Ms. Jordan says. "If you're going to be chairman of the board of a company you've got to know what's going on. None of us believed he didn't know what was going on."

Return to top of page

Copyright © 1998 Dow Jones & Company, Inc. All Rights Reserved.

TAB

13

CBS

CBS Evening News

January 7, 1998

(c) MCMXCVIII, CBS Inc. All rights reserved. Prepared by Burrelle's Information Services, which takes sole responsibility for accuracy of transcription. No license is granted to the user of this material other than for research. User may not reproduce any printed copy of this material for commercial purposes or in any fashion that may infringe CBS Inc.'s copyrights or proprietary interests in such materials.

DAN RATHER, anchor:

Tonight's Eye on America digs deeper into a story we first reported last year about a record liability judgment for the death of a child in a Chrysler minivan. What was not widely known at the time and what CBS' Anthony Mason now reveals, is how far Chrysler had gone to head off a costly and embarrassing safety recall of its best-selling vehicle.

ANTHONY MASON reporting:

This is where Sergio Jimenez died in 1994. This is how the six-year-old South Carolina boy was killed. Sergio's parents say their Chrysler minivan was hit crossing the intersection. The rear gate popped open. Sergio was thrown out. His skull was crushed. The family sued Chrysler, claiming the rear-gate latch was defective.

Unidentified Man #1: The latch can ride up and over it.

MASON: In October, the Jimenezes won the biggest judgment ever against an automobile company--$262 1/2 million.

The Jimenez case also revealed this series of confidential Chrysler documents that made a lasting impression on the jury. Critics say the documents portray a corporate giant ready to pull out all the stops to protect its most profitable product, ready even to manipulate the government agency that was threatening to order a recall.

NHTSA, the National Highway Traffic Safety Administration, had already conducted its own crash tests on Chrysler minivans. Watch the result: On side impact, the rear latch failed, the passengers flew out.

Mr. PHIL RECHT (NHTSA Deputy Administrator): This problem led to over 135 separate incidents of ejection, approximately 90 injuries, close to 40 fatalities.

MASON: NHTSA warned Chrysler that preliminary tests on its '84 to '94 minivan latches showed, quote, "a safety defect that involves children." The alarm sounded at Chrysler. A government-ordered recall would threaten $2 billion a year in minivan profits. The company chairman, Robert Eaton, was warned in an internal memo: `If we want to use political pressure to try to squash a recall letter, we need to go now.'

(Excerpt from videotape)

Unidentified Man #2: Have you ever tried to squash an investigation?

Mr. ROBERT EATON (Chairman, Chrysler): No, sir.

(End of excerpt)

MASON: When Eaton testified on videotape in the Jimenez trial, he didn't remember the memo.

(Excerpt from videotape)

Mr. EATON: Nor--nor to my--to my knowledge, was there any activity whatsoever to squash a recall letter because obviously we didn't get a recall letter. It was...

Man #2: Because you squashed it.

Mr. EATON: Definitely not, sir.

(End of excerpt)

Ms. JOAN CLAYBROOK (Consumer Advocate): It's obvious that--that Chrysler will do anything to stop this recall.

MASON: Joan Claybrook is a former head of NHTSA.

Ms. CLAYBROOK: They're willing to use political pressure or--or anything else to figure out how to stop the Department of Transportation from requiring them to recall these minivans.

MASON: So Chrysler went to Capitol Hill. A month later, another minivan latch memo to Chairman Eaton reported, quote, "We've been working on a letter with Hill staff." In the margin, a handwritten note, `Hopefully, this won't leak.' But Eaton testified he had no idea what `Hill staff' meant.

(Excerpt from videotape)

Man #2: But--but you know that the Hill staff are people who work for congressmen and senators on the Hill, right?

Mr. EATON: Very likely, but it could be some man or woman by the name of Hill.

(End of excerpt)

MASON: In fact, it was Congressmen John Dingell and Mike Oxley, whose committee controlled NHTSA's pursestrings. Just as NHTSA was considering a Chrysler recall, the agency received this letter from the congressmen, pointedly challenging its recall policy. The letter questioned NHTSA's practice of making preliminary data public, rather than waiting for conclusive findings. Written with Chrysler's help, the letter never mentioned the latches. But the congressmen clearly intended to chill the minivan investigation, according to Joan Claybrook.

Ms. CLAYBROOK: Dingell and Oxley framed their letter as a policy matter, but everyone knows that it's all about the minivan. These members of Congress wanted to stop a recall on behalf of one of their constituents, Chrysler Motor Company.

MASON: The congressmen and Chrysler declined to be interviewed on camera. They insist the letter was only intended to address broad NHTSA policy and that they did nothing improper.

NHTSA deputy administrator Phil Recht, who received the letter, did agree to speak with us on camera.

Mr. RECHT: I did not view this letter as any attempt to affect the outcome of--of this case.

MASON: But you felt no pressure at all from that letter?

Mr. RECHT: It really had no impact on us.

Unidentified Man #3: Today we are announcing an unprecedented action.

MASON: Nevertheless, just two months after the congressmen wrote their letter, Chrysler and NHTSA cut a deal: No recall. Chrysler agreed to replace the old latches, but on its terms, with no admission of a defect or safety problem.

(Excerpt from videotape)

Mr. EATON: They didn't find a defect, because there isn't a defect.

Man #2: Because you talked them out of it--your company talked them out of it by saying to them, `We'll voluntarily fix it. The deal will be...'

Mr. EATON: No. No, sir.

Man #2: `...no recall by you and we'll fix it,' right?

Unidentified Man #4: Objection.

(End of excerpt)

MASON: Chrysler is appealing the landmark $262 million judgment. Meanwhile, 1 1/2 million Chrysler minivans with the old latches are still on the road. Despite 37 deaths and 40 pending lawsuits, Chrysler continues to insist those latches are safe. In New York, I'm Anthony Mason for Eye on America.

(Announcements)

DAN RATHER, anchor:

Our top stories tonight dealt with universal life-and-death issues in the Terry Nichols jury room and in the cloning laboratory. There is also news about our place in the universe. Scientists today report the best evidence yet a big black hole is the gravity anchor at the center of our own Milky Way galaxy. And they've found another black hole that spews tremendous energy drawn from a nearby star every 30 minutes. They call it Old Faithful. And to underscore humanity's need to know what's out there, NASA's new lunar exploring satellite was successfully launched last night and is now well on its way to try and sniff out moon minerals and hidden ponds of moon water, all part of our worlds tonight.

DAN RATHER, anchor:

That's the CBS EVENING NEWS. Here's Bryant Gumbel now with a preview of tonight's "Public Eye."

BRYANT GUMBEL (Host, "Public Eye"): Tonight on "Public Eye," we talk exclusively with Susie Coehlo, ex-wife of the late Sonny Bono; plus a Church of Scientology mystery. When a young woman died after 17 days in her church's care, her family sued for wrongful death. Now the church is fighting back. "Public Eye" tonight.

RATHER: For the CBS EVENING NEWS, Dan Rather reporting. Good night.

TAB

14

Article View

Article 8 of 14
BUSINESS
Chrysler joins forces with Dingell in attempt to avoid minivan recall Firm, congressman argue U.S. can't request a recall without first proving that vehicles pose unreasonable' safety risk.
Bryan Gruley

02/01/95
The Detroit News
2DOT
Page E1
(Copyright 1995)

Detroit News Washington Bureau

Chrysler Corp., with the help of two key congressmen, is trying to throw an unusual legal obstacle in front of federal safety regulators who would like the automaker to recall four million minivans.

In a Jan. 20 letter to the National Highway Traffic Safety Administration, **Chrysler** lawyer Lewis Goldfarb argued that the administration cannot request a recall without first proving that the minivans pose an "unreasonable" safety risk.

Reps. John Dingell, D-Dearborn, and Michael Oxley, R-Ohio, made similar arguments in a Jan. 17 letter to NHTSA chief Ricardo Martinez.

Oxley is chairman and Dingell is the ranking minority member of a House panel that soon will be reviewing the agency's budget.

The letters, obtained by The Detroit News, question NHTSA's long-used tactic of sending a written request to a manufacturer for a recall before reaching a final determination that a vehicle is unsafe.

The request is designed to give an automaker a chance to show why a recall is unwarranted.

The manufacturer can decline the request _ as General Motors Corp. did in 1993 when NHTSA asked for a recall of its 1973-87 pickup trucks _ or agree to a voluntary recall.

Dingell's letter said a recall request unfairly and publicly casts the manufacturer in a negative light before NHTSA has completed its work.

"Several auto companies raised this concern" in the wake of the controversial GM truck case which was settled last December, a congressional aide said.

The pleas by the congressmen and **Chrysler** suggest the automaker is leaning toward resisting a recall of its 1984-94 minivans, which are alleged to have defective rear-door latches that allow passengers to be ejected in crashes.

Last month the automaker sharply criticized NHTSA in two letters alleging that: NHTSA conducted crash tests that, in **Chrysler** 's view, were designed specifically to make the rear latches fail. "We know that any minivan can be opened with a similar test," said Steve Harris, a **Chrysler** spokesman. NHTSA's statistical analyses are flawed because they do not include all vehicles with rear hatches, such as station wagons and sport utility vehicles.

Sources close to the investigation say NHTSA officials don't consider the crash test to be their most important evidence and that a recall may be in order, although a final decision has not been made.

Some **Chrysler** officials have privately urged that the automaker take steps to remedy the latches.

Return to Headlines

Copyright © 1998 Dow Jones & Company, Inc. All Rights Reserved.

VIA FAX - Page 1 of 5

REDACTED DOCUMENT

Date
January 18, 1995

To - Name & Department
Bob Eaton, Tom Denomme, Ron Boltz, François Castaing, Rob Liberatore, Bud Liebler

From - Name & Department
Al Slechter

Client Number
936-00-00

Subject: **MINIVAN LATCH CASE**

Attached is the letter to Rick Martinez which we have been working on with Hill staff. The final is signed by Mike Oxley and John Dingell. Several things should be noted:

- Tom Bliley was briefed on this subject by staff and, for whatever reasons, he decided to defer the signature to Mike Oxley. This can be read as the first example of the "Bliley process" and signals less attention by Bliley to our industry problems. A second reading, however, is that the relationship between Bliley and Oxley has been somewhat strained and that Bliley is deferring to Oxley's subcommittee jurisdiction.

- As you will see, the letter was substantially toughened by staff and we are aware that Dingell's staff was instrumental in further fleshing out the questions raised in the letter.

- As you may be aware, GM delayed their approval of this letter in the final stages of drafting. [redacted]

- It would not be surprising if, when GM sees the final product, they are exercised that we did not give full weight to their input. We have only so much influence on the specific content of this type of letter once it is put in the hands of the staff for final work.

- From my vantage point, it is a much improved and tougher product and will hopefully have a positive effect on our situation.

AJS/st

Eaton
EXHIBIT NO. 18
8-28-97
M. MOORE

RECEIVED
JAN 1 1995
A.

AL000273

[illegible]
[illegible]
[illegible]

We are concerned with this voluntary recall process for several reasons. The request for voluntary recall, because it is made public, can have an adverse impact on the safety reputation of the product as well as the manufacturer. It can create anxiety among all vehicle owners regarding the safety of their vehicles. It forces the manufacturer to choose between conducting a costly recall prior to any finding of defect OR risking a public perception that the vehicles are unsafe, with the attendant bad press. The exploitation of this process by trial lawyers and others is also troublesome. Given the frequency of ODI's subsequent closing of the case after the manufacturer declines a recall request, the process can be seen in many cases as a coercive device used to impose requirements beyond the law.

General Motors' experience with the C/K truck suggests that there may be a category of investigations where the use of the voluntary recall letter is contrary to the statutory purposes of the Safety Act. In the GM case the IG found that the recall request was made prematurely because in February 1993 Department officials wanted to speed up an investigation began only two months earlier, thereby misleading the public regarding the safety of the GbI truck and causing great hardship to GM. To placate those officials, NHTSA, not the ODI, recommended in April 1993 that the Secretary authorize ODI to send a voluntary recall letter to GM and to require GM to provide a detached justification if they refused to do so. ODI anticipated GM's response would be negative and that the explanation would provide additional information relevant to the investigation. That was a misuse of the process based on interference in the investigation by the Department. The harm was compounded when the Secretary announced an initial decision based, in part, on his apparent belief that the voluntary recall request by ODI was tantamount to a staff finding of defect.

While the GM case may be unique in certain respects, it clearly illustrates how a well-intentioned, informal procedure can be grossly misconstrued by the public and senior policy makers, with extremely harmful consequences to a manufacturer and its products. The misuse of such a procedure, it seems to us, does a disservice to the agency and its mission to ensure the safety of our highways.

In addition to your general review of the voluntary recall request we ask that you respond to the following questions:

(1) What is NHTSA's authority under the Motor Vehicle Safety Act for using this process?

(2) What procedures are in place to ensure uniform application of this process?

(a) Is a threshold level of evidence required before a letter may be sent?

(b) Are staff decisions to request voluntary recall reviewed at a higher level?

(3) In light of the GM case, is it reasonable for us to assume that these procedures are not binding on the ODI or NHTSA and that they can be ignored at the whim of Departmental officials? Clearly, the ODI Control Plan is only a guideline document.

(4) What is the frequency of case closings after a voluntary recall request is sent?

(5) At the time a request for voluntary recall is made, how close is the agency to an initial decision of defect of closure?

(6) Has NHTSA considered any alternatives to this process that would accomplish the same purpose but avoid unfairly disparaging a product and alarming its owners?

(7) Can this process be revised to avoid the kinds of problems documented in the GM case?

(8) In light of the IG's finding in the GM case that NHTSA felt pressured to issue a recall request letter prematurely, what safeguards do you plan to put in place to assure that recall request letters are not issued until an appropriate investigation has preceded the decision to send such a letter?

(9) The IG's report confirmed that the "recall request letter" is a misunderstood device, and that even the Secretary of Transportation misconstrued the importance of the letter, erroneously believing it to reflect a definitive agency position. Given this confusion about the meaning and import of a "recall request letter," is it now appropriate to revisit the process by which it is decided to send a letter? In particular, what are the advantages and disadvantages of delaying the issuance of any such recall request until after the evidence in the investigation has been thoroughly reviewed by the Associate Administrator for Enforcement and the Defect Review Panel?

(10) It seems that a recall request letter resembles a settlement proposal, in which the agency staff suggests that its concerns about a matter could be resolved if the targeted company agrees to take a particular action, in this case a voluntary recall. Other law enforcement agencies under the jurisdiction of this Committee, such as the Consumer Product Safety Commission and the Federal Trade Commission, consider their comparable procedures to be confidential settlement discussions, and do not place records pertaining to such discussions on the public record. What is the rationale behind NHTSA's practice of preparing written "recall request letters" and placing them in the public record, rather than treating such staff requests as confidential settlement proposals? Why shouldn't NHTSA consider a "recall request" to be a confidential settlement proposal between the agency and the regulated party?

(11) At what stages of an investigation is information made public by NHTSA or ODI prior to any determination of defect? What is the origin of this policy? Is this a sound practice when an investigation may not be sufficiently complete to determine a defect?

(12) Does NHTSA have the legal authority to revise its defect investigation procedures in order to treat "recall requests" as confidential settlement proposals?

(13) In light of the GM experience, what actions are you taking or planning to take to improve the integrity of the investigative process as contemplated by the regulations and the precedents so that ODI experts can conduct investigations in a timely and fair manner without unnecessary interference from Departmental officials?

We appreciate your attention to this matter, and respectfully request your response within 10 business days. We presume that now that the GM case is closed, your recusal will no longer preclude you from responding to these matters. If that is not the case, please explain why and have the Deputy Administrator respond.

Sincerely,

Michael G. Oxley
Chairman
Subcommittee on Commerce, Trade and Hazardous Materials
Committee on Commerce

John D. Dingell
Ranking Democratic Member
Committee on Commerce

TAB

15

In The Matter Of:

Paul V. Sheridan v.
Chrysler Corporation, et al

CLARENCE V. DITLOW
March 25, 1998

Beta Reporting
910 17th Street, N.W.
Suite 200
Washington, DC 20006
(202) 638-2400 or (800) 522-2382

Original File AADITLOW.TXT, 194 Pages
Min-U-Script® File ID: 1513910738

Word Index included with this Min-U-Script®

[6] **Q:** What is Exhibit 10?

[7] **A:** Looks like a transcript of a [8] program called "A Current Affair" on [9] September 20, 1995, and the subject of the [10] story is "Chrysler Minivan Hotline Story."

[11] **Q:** Are you a person who is quoted in [12] that particular presentation by "A Current [13] Affair"?

[14] **A:** Yes, I am.

[15] **Q:** And what is it that you indicated [16] on that program?

[17] **A:** That the Chrysler rear door latch [18] is one of the most lethal defects that we've [19] seen in auto safety history.

[20] **Q:** Have you ever been sued by Chrysler [21] for having made that statement, sir?

[22] **A:** No.

Page 160

[1] **Q:** Let me show you what's been marked [2] as Exhibit No. 11 and ask if you can identify [3] that.

[4] **A:** Yes. This is a letter from [5] Congressmen Dingell and Oxley to Dr. Richard [6] Martinez. It says Richard Martinez, but it's [7] actually Ricardo Martinez. He's the [8] administrator of the National Highway Traffic [9] Safety Administration.

[10] **Q:** Is that the letter you were [11] referring to earlier on the record that comes [12] from Exhibit 1 and was part of the effort by [13] Chrysler to use the federal Congress to [14] pressure NHTSA with respect to the recall?

[15] **MR. KIENBAUM:** Objection. Lack of [16] foundation.

[17] **THE WITNESS:** Yes. This letter is [18] written to be generic about questioning the [19] tactic of the agency of asking for a [20] voluntary recall request. And it was in no [21] uncertain terms taken to mean that they're [22] referring to the agency about the issue of

Page 161

[1] voluntary recall request for the Chrysler [2] minivan latch.

[3] **BY MR. MORGAN:**

[4] **Q:** Why do you say that?

[5] **A:** Because that was the hottest [6] investigation down there. The staff of the [7] agency were about to issue such a voluntary [8] recall request.

[9] **Q:** Do you have a source of information [10] at NHTSA for that testimony?

[11] **A:** Yes.

[12] **Q:** Was your answer yes?

[13] **A:** Yes.

[14] **Q:** Can you identify that person?

[15] **A:** No.

[16] **MR. MORGAN:** Mr. Ditlow, then I [17] have no further questions.

[18] **THE WITNESS:** Wait. I want to make [19] sure that I answered your question correctly. [20] You asked me can I or would I?

[21] **MR. MORGAN:** I did ask you "Can [22] you." The portent of my question is " Would

Page 162

[1] you."

[2] **THE WITNESS:** I can, but I won't.

[3] **FURTHER EXAMINATION BY COUNSEL FOR**

[4] **DEFENDANTS/PLAINTIFF CHRYSLER CORPORATION**

[5] **BY MR. KIENBAUM:**

[6] **Q:** Going back to that last question [7] and answer, Mr. Ditlow, tells me that what [8] you were talking about just before then was [9] based on something someone else has said to [10] you, but you're not prepared to identify the [11] speaker; is that correct?

[12] **A:** Yes.

[13] **Q:** In light of the fact that you have [14] acknowledged that you have never designed, [15] have never tested a latch, and don't consider [16] yourself an expert on latches, what is the [17] basis of the opinion about latches being the [18] most lethal defect, as you've testified, you [19] believe?

[20] **MR. MORGAN:** Objection to the form [21] and foundation. Go ahead.

[22] **THE WITNESS:** The National Traffic

Page 163

[1] and Motor Vehicle Safety Act of 1966 does not [2] require the agency to identify the failure [3] mode for a safety defect, just that there be [4] a substantial number of failures in use.

[5] The basis for my statement is that [6] the average safety recall, and the [7] government's conducted over 3,000 to date, [8] involves no deaths and no injuries. And for [9] a defect to have 41 deaths, let alone — you [10] know, 1 death, let alone 41, is an incredibly [11] high number.

[12] So that's why I say it's one of the [13] most lethal. If one goes down the history of [14] defects before the Department of [15] Transportation, I can only think of two [16] others that are higher, one of which is the [17] Ford transmissions that jumped from park to [18] reverse, and the other is the side-saddle gas [19] tanks.

[20] **BY MR. KIENBAUM:**

[21] **Q:** Well, my question, really, [22] Mr. Ditlow, is that part that got into your

Page 164

[1] answer, and that is the word "defect." [2] What's the basis of your opinion that the [3] latch was defective or is defective?

[4] **A:** The basis for my opinion is that [5] the latches on the Chrysler minivans were [6] failing. The hatches were popping open, and [7] occupants were popping out. And we had had [8] 41 deaths associated with the hatches coming [9] open in Chrysler minivans.

[10] And it's not important as to what [11] the particular failure mode is, just that [12] they're failing. And when one compared the [13] Chrysler hatches to the other minivan [14] hatches, the other ones weren't popping open [15] like the Chryslers.

[16] **Q:** Anything else that you base your [17] opinion on, other than what you've just [18] stated?

[19] **A:** Well, 25 years of experience of [20] working before the National Highway Traffic [21] Safety Administration and members of Congress [22] on this legislation and these recall

Page 165

[1] programs.

[2] **Q:** I don't understand that. What does [3] that add to the opinion concerning whether or [4] not a particular latch is defective or not?

[5] **A:** Well, you're asking basis for my [6] opinion, and the Center for Auto Safety has [7] filed more petitions and gotten more recalls [8] on safety defects than any other entity, you [9] know, outside of the National Highway Traffic [10] Safety Administration.

[11] **Q:** And when you file petitions, that [12] means you're advocating a certain cause of [13] action?

[14] **A:** That's right.

[15] **Q:** But that just again restates the [16] fact that you or your organization may have [17] an opinion, and I'm still getting back to the [18] basis of the opinion.

[19] **A:** The basis for the opinion is my [20] experience with the legislation, and looking [21] at — I mean, I personally have looked at the [22] investigatory files and the files of recalls.

Page 166

[1] I mean, I can say to you today that I've [2] looked at over 2,000 investigations and [3] recalls, and I know what goes into the [4] determination by the agency.

[5] And the statutory language is that [6] there be a defect affecting motor vehicle [7] safety, which is the possibility of death or [8] injury in a motor vehicle accident. And [9] there have been seven cases litigated [10] involving motor vehicle safety defects, and [11] when you look at these cases before the [12] courts, they have — for example, the [13] Chrysler —

not the Chrysler, but the [14] Cadillac Pittman arm, there was no deaths, no [15] injuries, and Cadillac's whole defense was it [16] was only in low-speed accidents where the [17] Pittman arm fails.

[18] Firestone recalled 21 million tires [19] for a defect out for which they never figured [20] out what the failure mode was; it's just that [21] the steel belt within the steel-belted radial [22] separated.

Page 167

[1] **Q:** Have you given me all information [2] now that you believe you have for the [3] formulation of that opinion you have stated [4] with respect to the quality or lack of [5] quality of the latch that we've been talking [6] about?

[7] **A:** Well, I also believe that if the [8] other — you know, the paper that would go [9] into that position would be, just look at the [10] investigative report of which they closed the [11] investigation.

[12] And this was a decision that was [13] pressured on the agency by Chrysler [14] Corporation, but that investigative report [15] goes into the comparative strengths of the [16] Chrysler latch versus other latches, what [17] happens in the crash tests. And on the [18] facts, it's right; on the decision, it's [19] wrong.

[20] **Q:** Your opinion is that NHTSA was [21] wrong in its conclusions?

[22] **A:** My opinion is that NHTSA's

Page 168

[1] evaluation of the facts was correct, but [2] NHTSA's decision to allow a service campaign [3] versus a safety recall was a disservice to [4] the American public and to Chrysler [5] Corporation.

[6] **Q:** And what is the basis of your [7] opinion that NHTSA was wrong in that regard?

[8] **A:** Because when you look at the facts [9] of the case, there should have been a safety [10] recall.

[11] **Q:** Do you know anything about the [12] underlying facts of any given accident: In [13] other words, vehicle speed, the angle of the [14] hit, that kind of thing?

[15] **A:** When one looks at the individual [16] facts of the individual cases, no.

[17] **Q:** Do you know anything about the [18] numbers of minivans that may be on the road [19] today compared to other minivans?

[20] **A:** I mean, I'm not sure what the [21] population of the other minivans is, but [22] certainly, Chrysler's minivans are about 4

Page 169

[1] million, the '84 through '95s.

[2] **MR. KIENBAUM:** Counsel, I gather [3] your earlier instruction with respect to the [4] question of work between the Center for Auto [5] Safety and plaintiffs' lawyers would still [6] hold, and you would prohibit me from [7] inquiring into that area?

[8] **MS. MATZZIE:** Right. There's two [9] answers. One, we asked for a stipulation and [10] you refused. And the second is, you went [11] into a line of questioning concerning whether [12] or not the Center for Auto Safety works with [13] plaintiffs' lawyers, and he's already [14] answered that.

[15] **MR. KIENBAUM:** You mean, amicus [16] briefs, that kind of thing?

[17] **MR. VLADECK:** No.

[18] **MR. KIENBAUM:** Does that mean the [19] issue's now open and moot, and I can ask the [20] question whether the statement —

[21] **MR. VLADECK:** No.

[22] **MR. KIENBAUM:** — can be answered

Page 170

[1] or not? Or is that instruction still —

[2] **MS. MATZZIE:** It's been answered. [3] We've been over a few grounds several times. [4] There's nothing added from this sentence.

[5] **MR. KIENBAUM:** All right. Well, [6] let me ask the witness.

[7] **BY MR. KIENBAUM:**

[8] **Q:** Does the Center for Auto Safety [9] assist plaintiffs' personal injury lawyers in [10] issues related to safety?

[11] **A:** No.

[12] **MS. MATZZIE:** Objection. It's [13] asked and answered.

[14] **THE WITNESS:** May I answer it?

[15] **MS. MATZZIE:** Yes, you may answer [16] it.

[17] **THE WITNESS:** No. We do assist [18] plaintiffs' lawyers in product liability [19] lawsuits.

[20] **BY MR. KIENBAUM:**

[21] **Q:** Do you have communications with any [22] plaintiffs' personal injury lawyers as the

Page 171

[1] Center for Automotive Safety?

[2] **MR. MORGAN:** Objection to the [3] foundation.

[4] **THE WITNESS:** Well, just like the [5] Society of Automotive Engineers, we have [6] publications which attorneys buy, both [7] plaintiffs' and defense attorneys.

[8] **BY MR. KIENBAUM:**

[9] **Q:** Have you ever communicated with the [10] organization known as the American Trial [11] Lawyers Association?

[12] **MS. MATZZIE:** Objection. Relevance [13] to this case.

[14] **THE WITNESS:** I have done an [15] interview for one reporter from the American [16] Trial Lawyers Association, just as I did an [17] interview for this intelligentsia which you [18] presented me with.

[19] **BY MR. KIENBAUM:**

[20] **Q:** And that's the only communication [21] you've had with them as an organization?

[22] **A:** Since I have been the director of

Page 172

[1] the Center for Auto Safety, I don't — I [2] mean, I occasionally get calls from the [3] American Trial Lawyers Association reporters [4] about proceedings before the National Highway [5] Traffic Safety Administration.

[6] But beyond that, I'm not aware of [7] anything that we do.

[8] **Q:** The question is, really, are there [9] communications between the Center for Auto [10] Safety and the American Trial Lawyers [11] Association?

[12] **A:** Are there communications?

[13] **Q:** Yes, sir.

[14] **A:** Well, I once went to a Roscoe Pound [15] Forum which I think ATLA sponsored, and I [16] suggested that instead of punitive damages, [17] we have criminal penalties for manufacturers [18] that produced those hazardous products. And [19] neither the manufacturers nor the trial [20] lawyers liked it, but I thought it was a [21] pretty good suggestion.

[22] **Q:** And that's the only communication

Page 173

[1] the Center for Auto Safety has had with [2] American Trial Lawyers Association?

[3] **A:** Since I have become the director — [4] I mean, you have to put some time limit on [5] this. I'm not knowledgeable of what happened [6] before I became the director for the Center [7] for Auto Safety.

[8] In the case of the GM side-saddle [9] pickups, we asked the Association of Trial [10] Lawyers of America to give us records on any [11] case in which they were aware in which a GM [12] gas tank resulted in a lawsuit. And we got [13] that information from them.

[14] **Q:** And your statement is that you [15] never receive requests for assistance from [16] plaintiffs' lawyers in connection with [17] litigation that may be pending at the time?

[18] **MS. MATZZIE:** Objection. [19] Relevance.

[20] **THE WITNESS:** There's a difference

TAB

16

Jimenez, et al. vs. Chrysler

Robert J. Eaton

August 28, 1997

Page 103

the assumption that we will eventually be requested to do a recall."
Q Thank you.
A That's a totally different statement than what we were just talking about, our operating under the assumption.
Q You were assuming -- I tried to use his words in my prior questions but you were assuming back in December of 19 -- strike that.
In December of '94, you were continuing to operate under the assumption that you would eventually be requested to do a recall, correct?
A That's what this says and there's no question that's one of the situations that we were dealing with, but there was also --
Q And did you think about -- strike that.
But if you thought you were going to have to at some point do a recall, did it occur to you that perhaps you should be letting consumers know sooner rather than later that there may be a problem with their car?
A There was no defect. You must understand that. There wasn't any, there isn't any. There was nothing to notify.
Q And, well, NHTSA was going to find a defect if

Page 104

you didn't strike a deal with them, right?
A Absolutely not. 3:44:40
Q Okay. Let me show you Exhibit 21. The title of the document is Minivan Latch Issue Proposed Agreement with NHTSA. Do you see that?
A Yes, sir, I do.
Q In paragraph one, you all got NHTSA to agree that they would deny all Freedom of Information Act requests to place their investigative files including the crash test video in the public record and that the Justice Department would defend any lawsuits seeking to compel production under the Freedom of Information Act; is that correct?
[redacted]
A FOIA. 3:46:00
Q Freedom of Information Act.
A Okay.
Q In other words, you all got NHTSA to agree that they would keep or fight the public in finding out what their crash test video showed, correct?

Page 105

[redacted]
THE WITNESS: That was while the investigation was going on, I assume. Obviously they were ultimately released, so there wasn't -- you know, I don't know.
Q They were released. I think there was a lawsuit to get them, but in any event, are you aware of any deals being struck with NHTSA?
A I do recall -- no, I'm not. I clearly remember that we were continually -- this investigation was hampered by leaks in various sensationalism in the press -- sensationalist press and we wanted all the facts to get out there and obviously all the data so that a proper conclusion could be made, and there isn't any doubt that we would not want to see pieces of the information get out until the investigation was complete, but I'm not familiar with, you know, exactly what happened.
Q Well, this is at the time the investigation was 3:47:33 effectively complete, wasn't it?
[redacted]
A. [redacted]: What is the date?

Page 106

Q [redacted] Well, if you look at the attached document, it's dated March 3, 1995?
[redacted]
THE WITNESS: My recollection is that this investigation wasn't concluded for a long time after that. 3:48:34
Q (BY MR. GERSTEIN): Okay. Well, look at No. 2, paragraph two. Do you see where it says, "NHTSA has agreed that a Chrysler service campaign

Page 107

would fully satisfy all their concerns?"
A Yes.
Q [redacted]
[redacted] 49:11
Do you see where it says, "NHTSA has agreed that a Chrysler service action would fully satisfy all their concerns and they would give full public support to such an effort?"
A Yes, sir, I do.
Q Do you see where it says, "The critical elements that differentiate the service action from a recall (mostly reflected in the" -- attached --

Page 108

"the two attached letters) are as follows." Do you see that?
A Yes.
Q And then it says, "No admission of defect or safety problem." Do you see that? Do you see where it says, "Stated purpose of the campaign - to ensure piece of mind in light of media coverage?"
A I can assure you that was exactly what the safety action was all about.
[redacted]
Q (BY MR. GERSTEIN): Did you ever see this document?
A No, sir, I don't believe so.
Q [redacted]
Were you consulted by executives in your

Robert J Eaton
Chairman of the Board
Chief Executive Officer

CHRYSLER CORPORATION

March 30, 1995

SERGIO

The Honorable John D. Dingell
House Commerce Committee
2125 Rayburn House Office Building
U. S. House of Representatives
Washington, DC 20515

Dear Congressman Dingell:

I want to thank you for your personal involvement on behalf of Chrysler and other auto manufacturers regarding the NHTSA defect investigation process. I believe your oversight of NHTSA has played a significant role in causing NHTSA to alter its mindset as well as its processes in its handling of complex safety investigations. We at Chrysler intend to continue to speak out on this issue and hope you will continue your probing for an improved investigatory process.

I also want to provide you some insight on our recent decision on the minivan latch issue. As you are no doubt aware, with great reluctance we decided on March 27 to initiate a service campaign for our minivan owners, offering them a replacement rear door latch for model years 1984 through 1994. This decision was based solely on our determination that Chrysler minivan owners had become so misled by outrageous media sensationalism of this issue that further delay in adjudicating this investigation with NHTSA would be harmful to the company. It became necessary to put customer concerns first over our absolute insistence that no safety issue actually exists.

I have never doubted that NHTSA's evaluation of the facts in this matter would eventually conclude in their closing the case without an adverse finding. But to reach that conclusion would take many more months during which our exposure to continuing media barrages would not be abated.

It is regrettable that the NHTSA investigative process is wholly deficient in protecting the rights and reputations of manufacturers where there are: (1) large numbers of vehicles involved; (2) complicated technical issues; and (3) post facto and subjective determinations by NHTSA of on-road crashworthiness safety performance. I want to assure you that Chrysler will work diligently for changes to bring fairness to this system. I hope you will continue your invaluable oversight efforts to that end.

Thank you again for your support.

Sincerely,

Eaton
EXHIBIT NO. 25
8-28-97
M. MOORE

Chrysler Corporation
12000 Chrysler Drive

CHRYSLER CORPORATION

Robert J Eaton
Chairman of the Board
Chief Executive Officer

March 30, 1995

SERGIO

The Honorable Michael G. Oxley
Chairman-Subcommittee on Commerce,
Trade and Hazardous Materials
House Commerce Committee
2125 Rayburn House Office Building
U.S. House of Representatives
Washington, DC 20515

Dear Mr. Chairman:

I want to thank you for your personal involvement on behalf of Chrysler and other auto manufacturers regarding the NHTSA defect investigation process. I believe your oversight of NHTSA has played a significant role in causing NHTSA to alter its mindset as well as its processes in its handling of complex safety investigations. We at Chrysler intend to continue to speak out on this issue and hope you will continue your probing for an improved investigatory process.

I also want to provide you some insight on our recent decision on the minivan latch issue. As you are no doubt aware, with great reluctance we decided on March 27 to initiate a service campaign for our minivan owners, offering them a replacement rear door latch for model years 1984 through 1994. This decision was based solely on our determination that Chrysler minivan owners had become so misled by outrageous media sensationalism of this issue that further delay in adjudicating this investigation with NHTSA would be harmful to the company. It became necessary to put customer concerns first over our absolute insistence that no safety issue actually exists.

I have never doubted that NHTSA's evaluation of the facts in this matter would eventually conclude in their closing the case without an adverse finding. But to reach that conclusion would take many more months during which our exposure to continuing media barrages would not be abated.

It is regrettable that the NHTSA investigative process is wholly deficient in protecting the rights and reputations of manufacturers where there are: (1) large numbers of vehicles involved; (2) complicated technical issues; and (3) post facto and subjective determinations by NHTSA of on-road crashworthiness safety performance. I want to assure you that Chrysler will work diligently for changes to bring fairness to this system. I hope you will continue your invaluable oversight efforts to that end.

Thank you again for your support.

Sincerely,

Chrysler Corporation
[illegible] Chrysler Drive

T. G. DENOMME

December 13, 1994

R. J. Eaton
R. A. Lutz
R. R. Boltz
F. J. Castaing
T. R. Cunningham
D. E. Dawkins
L. H. Goldfarb
S. J. Harris
T. J. Kowaleski
A. C. Liebler
C. P. Theodore
G. C. Valade

Attached is the agenda for the Minivan Latch meeting scheduled for 3 p.m. today in the Keller Building Conference Room A.

T. G. Denomme

/bw

Eaton
EXHIBIT NO. 15
8-28-97
M. MOORE

Post-it™ brand fax transmittal memo 7671 | # of pages ▸ 2

To KOWALESKI	From DENOMME
Co.	Co.
Dept.	Phone #
Fax # 8-776-7947	Fax #

DOCUMENT PRODUCED PURSUANT TO A PROTECTIVE ORDER IN JIMENEZ, SERGIO V. CHRYSLER

REDACTED DOCUMENT

MINIVAN LATCH ISSUES
AGENDA

DECEMBER 13, 1994

Topic	Discussion Leader	Time
• Opening Comments	Denomme	5 minutes
• Update Since Last Meeting	Dawkins/Goldfarb	10 minutes
• Report on Latch Status for Field Campaign	Theodore	10 minutes
[redacted]	[redacted]	[redacted]
• Review of Communications Plans for a NHTSA Confrontation	Liebler	30 minutes
• Review of Focus Group Research	Liebler	10 minutes
• Discussion of Combined Offer to Replace/ Confrontation Strategy	Denomme	10 minutes
• Political Strategy	Liberatore	10 minutes
• Business Decision	Group	20 minutes
		1 hour, 50 minutes

12/13/94

DOCUMENT PRODUCED PURSUANT TO A PROTECTIVE ORDER JIMENEZ, SERGIO V. CHRYSLER

T. G. DENOMME

December 9, 1994

R. J. Eaton
R. A. Lutz

Re Point #1 ... we've been talking to The Detroit News today re holding their latch story. Bud has worked out an arrangement whereby they will not run the story this weekend and we will agree to give them a one-day lead if we decide to do a customer-friendly action only (a voluntary recall).

If we decide to take on NHTSA, they understand that we will need to involve all media in that decision.

It should be noted, however, that if there are more leaks, or someone else breaks this story, then the News will go with theirs.

TGD:bw

DOCUMENT PRODUCED SUBJECT TO A PROTECTIVE ORDER IN JIMENEZ V. CHRYSLER

Eaton
EXHIBIT NO. 14
8-28-97
M. MOORE

REDACTED DOCUMENT

Confidential and Privileged

T. G. DENOMME

December 9, 1994

R. J. Eaton
R. A. Lutz

MINIVAN LATCH MEETING

A preview of next Tuesday's meeting:

1. Bad News ... Yesterday we received a call from Bryan Gruley (Detroit News Washington Bureau) who told us he and Bill Vlasic are working on a story for this weekend on the "raging debate within Chrysler on whether to recall the vans or take on NHTSA". This story, which may go on the Gannett wire (USA Today) will generate customer and dealer concerns, and could force NHTSA to dig in. Don't know the source, but the fact that their Washington Bureau got on it suggests either a NHTSA or a Consumer Advocacy source.

2. NHTSA Situation ... There was little discussion on our technical presentation last Monday. The consensus is that the new data we presented has bought us a little time ... there will probably be another technical session to discuss NHTSA's reaction to our data ... but it's unlikely we have changed their minds. Accordingly, we will continue to operate under the assumption that we will eventually be requested to do a recall.

3. Latch Fix ... Chris Theodore will update us. Because we have chosen not to contact external suppliers, our cost/timing estimates are very rough. But Chris will likely report that we could have some quantity of latches available for '91 to '94 models by early spring, and the new latch for the pre-'91 models in about nine months. I do not know where we stand on costs.

4. Take On NHTSA Strategy ... Tom Kowaleski will take us through a "script" for a media conference laying out our case. Bud Liebler will review the ads developed in conjunction with a decision to fight a recall. We will also review dealer/customer communication materials.

5. Research ... We are doing some focus group testing of the take-on-NHTSA approach. No one has seen the results yet, but early indicators are that customers "tune out" statistical arguments about accidents, fatalities, latch pull tests, etc., and focus on "what's Chrysler going to do to address customer concerns". There is no doubt that Chrysler has a special image and relationship with minivan customers when it comes to safety.

6. A Third Approach ... In addition to the voluntary recall path and the take-on-NHTSA path, a third path melding elements of a voluntary recall and a take-on-NHTSA approach will be discussed. Essentially, we would seize the high ground by going out with an offer to replace the latch for any of our owners who request a replacement (note this wording ... it is much softer and less urgent than the language NHTSA insists on under their recall procedure) and, at the same time, tell NHTSA to "pound sand". The obvious benefit of this approach is that we address our customer concerns without admitting to a defect (because there is no defect) and simultaneously engage NHTSA in the fight over principle.

DOCUMENT PRODUCED PURSUANT TO A PROTECTIVE ORDER IN THE MINIVAN LITIGATION

REDACTED DOCUMENT

[redacted] I should also point out that we have several other important cases under investigation by NHTSA, including minivan brakes, that we need to keep in mind before we engage them in a fight.

7. [redacted]

8. Recommendations ... There continues to be a divided house on what we should do once we know that NHTSA will send us a letter.

   - Sales/Marketing ... Wants us to address customer/dealer concerns and prefers a voluntary field campaign to a public fight on principle.
   - Public Relations ... Agrees with Sales.
   - Engineering ... Prefers we take on NHTSA.
   - Regulatory Affairs ... Prefers we take on NHTSA (but is supportive of the third alternative described in point #5).
   - [redacted]
   - Washington Office ... [redacted] but also sees some advantages to the third alternative.

9. Final Point ... Rob Liberatore makes the point that, regardless of what course of action we take, we should mount an aggressive effort in Washington to prevent the adverse use of bureaucratic power within NHTSA, specifically their funding from Congress, the process which allows NHTSA to design tests for the public record that play to the media and trial lawyers before ruling on a defect, the lack of objective criteria in determining whether a recall request is to be made, and the very fact that they can request a recall before establishing that a defect exists. I could not agree more.

If we want to use political pressure to try to squash a recall letter, we need to go now. We cannot expect to be successful if we don't activate until we are officially notified that a letter is coming. Of course, the risk of early action is that it may preclude NHTSA from exercising a close-the-case option.

T. G. Denomme

TGD:bw

DOCUMENT PRODUCED PURSUANT TO COURT ORDER IN JIMENEZ V. CHRYSLER

FREE AT NEWSSTANDS
TRY OUR CLASSIFIEDS
REACH A GREAT MARKET

Oakland Tech News

OUR 13TH YEAR
NEWS & ADVERTISING
CALL (810) 879-8200

VOL. 13, NO. 9 | OAKLAND COUNTY'S AUTO INDUSTRY AND BUSINESS NEWSPAPER | MARCH 6, 1995

CUSTOM FIT

The Detroit Transportation Club hosted a U.S. Customs Service Special Agent at their February luncheon — he spoke on customs fraud, its application to shippers and the responsibilities of all parties involved.

See CUSTOMS, page 2 ➤

DEALERSHIP LOYALTY

Along with improved customer satisfaction, that's what Chevrolet is trying to promote with its new Career Builders program that honors salespeople who stay at dealerships for more than three years.

See CHEVROLET, page 6 ➤

MOTOWN HOEDOWN

The Motown Museum hosted its annual fund-raising dinner and dance last week to help with renovation of the old Hitsville USA studio on West Grand Boulevard in Detroit's New Center Area.

See PARTY, page 6 ➤

CLEAN AND CLEAR

Orbital Engine Co. has long said it would provide automakers with an alternative to the four-stroke engine with its two-stroke, however, U.S. emissions standards have stood in the way of the in-

EATON ATTACKS FEDERAL REGULATIONS

By Scott Roush
Staff Writer

Chrysler Corp.'s Chairman Robert Eaton wrapped up the 1995 SAE International Congress and Expo with a speech that criticized the federal government for regulations stifling the growth of the auto industry.

From voluntary recalls and workplace streamlining to the average cost of today's vehicle, Eaton questioned the government's role in regulating business during his "Engineering for Value" presentation.

But Eaton did approve of what some of the government is doing. The Chrysler boss praised House Speaker Newt Gingrich and other Republicans' attempts to reduce some of the bureaucracy in Washington through the "Contract with America."

Eaton discussed how the automotive industry has reduced its workforce since 1950 and how the federal government has failed to reduced its workforce over the same time period. This, according

See EATON, page 4 ➤

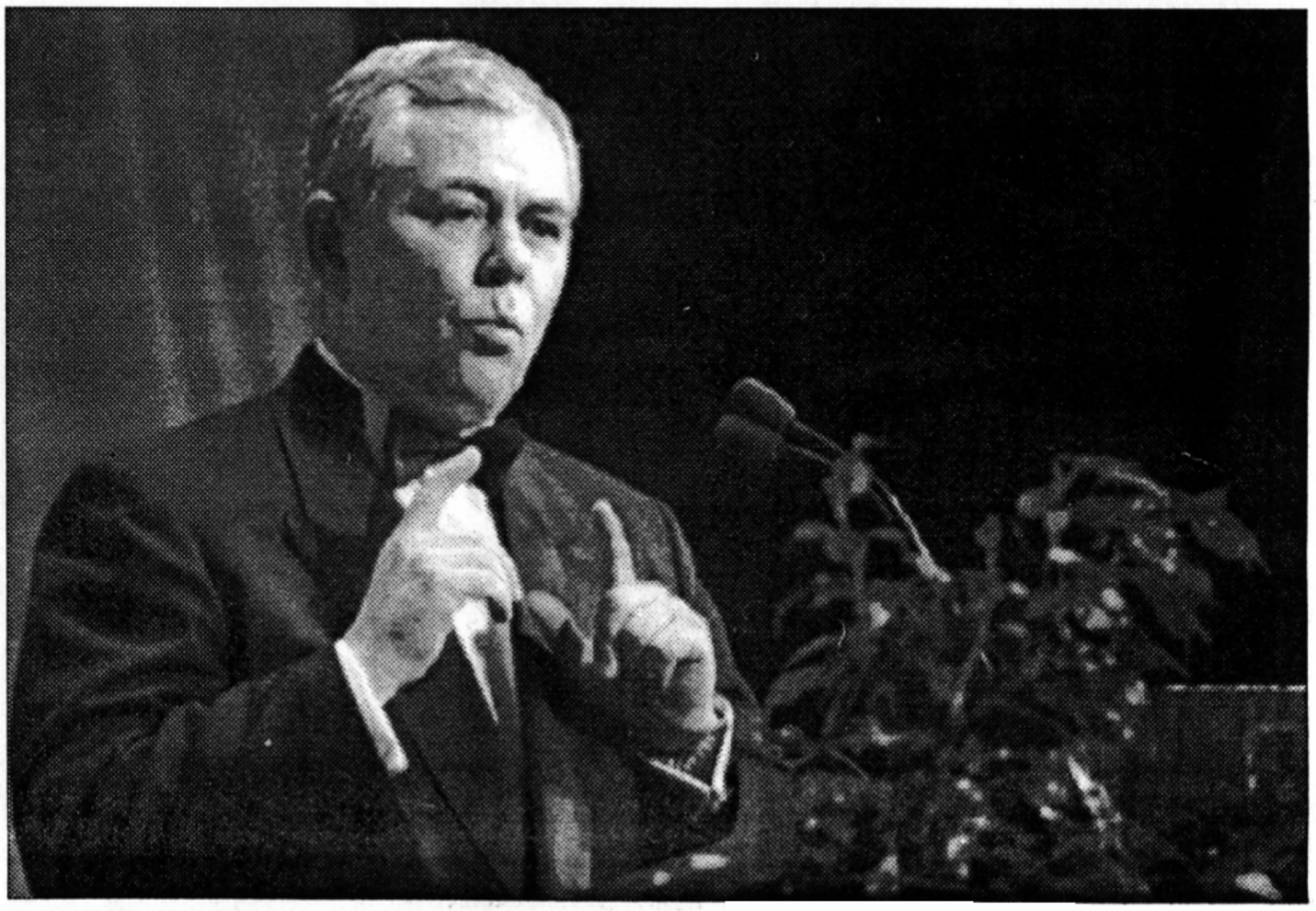

CHRYSLER CHAIRMAN Robert Eaton's speech at the SAE Congress and Expo banquet at Cobo Center was critical of the number of industry regulations coming from Washington.

science and technology on March 6 from noon -1 p.m. Call (810) 370-3574.

QUALITY WORKSHOPS A nine-week workshop, Improving Productivity Through Statistical Quality Control, starts March 20, from 6 -9 p.m. at Oakland University. Another workshop at OU, Improving Customer Satisfaction Through Process Control and Quality Planning, starts March 21 from 6 -9 p.m. Call (810) 370-3120.

"LOVE LETTERS" St. Dunstan's Guild of Cranbrook presents "Love Letters" by A. R. Gurney March 10, 11, 17 and 18. This performance piece delivers letters exchanged over a lifetime between two people who grew up together, went their separate ways but continued to share confidences. The show starts at 8 p.m. in St. Dunstan's Playhouse in Bloomfield Hills. Call (810) 644-0527.

VOLUNTEERS NEEDED The Oakland County Retired and Senior Volunteer Program (RSVP) seeks volunteers 55 years and older to become involved with community agencies who need assistance. Varied opportunities are available at schools, hospitals, libraries, human service agencies, and cultural institutions throughout Oakland County. Contact Linda Kaniewski at (810) 333-3716 ext. 115.

CHILD SAFETY "Northwest Troy Partnership Talks Safety" will be presented March 8, 7 -9 p.m. at Hamilton Elementary School on Northfield Parkway in Troy. Presentations by members of the Troy Police Department will include: home security, bike safety, how to use your police department, K-9 officers, child safety and personal safety. Admission is free. Call (810) 740-0431.

MUSICAL CELEBRATION Inspired by stories from and about the AIDS Memorial Quilt, "Quilt, A Musical Celebration" fills the theater with images of laughing, living, leave-taking and love. The show takes the stage March 10 and runs for three consecutive weekends. Cal (810) 370-3013.

CANCER PROGRAM Crittenton Hospital in Rochester and the American Cancer Society are sponsoring a four-week "I Can Cope" program that began Feb. 22 and continues for four consecutive weeks. "I Can Cope" will be

tax strategies. Featured speakers include Peter Bewrchy, Richard Falck and Davis Senatore, financial consultants. The seminars will take place at the Columbia Center in Troy across from the Troy Marriott. Call (810) 227-1931.

"ROYAL TOMBS OF SIPAN" This heralded exhibit will be on display at the Detroit Institute of Arts from now through April 30. Tomb robbers unearthed treasures from a pyramid near Sipan, Peru, and flooded the international art market with gold and silver artifacts. The exhibit features exquisite gold and silver jewelry, semi-precious stones and other artifacts excavated from the richest tombs ever explored in the Americas. Call (313) 833-2323.

BIRDS OF PREY Join an expert ornithologist for a talk featuring live Michigan wildlife March 14, 7 -8 p.m., at Edsel and Eleanor Ford House. Special guests could include a Barn Owl, Red-tailed Hawk and American Eagle, among others. Suitable for adults and children 6 and older. Admission is $3. Call (313) 884-4222.

AUTOMOTIVE MAGNESIUM The International Magnesium Association is sponsoring an educational seminar on magnesium in automotive applications, Apr. 4, 8 a.m. -4 p.m., at Laurel Manor, 39000 Schoolcraft in Livonia. There is no charge for attending the seminar. Form reservations call (703) 442-8888.

RAPID PROTOTYPING Register now for the Rapid Prototyping & Manufacturing '95 Conference and Exhibition, May 2 -4, at the Hyatt Regency in Dearborn. The event, sponsored by the Society of Manufacturing Engineers, will feature 60 exhibitors and 40 conference presentations. Keynote speaker is Mary L. Good, undersecretary of technology at the U.S. Department of Commerce. For more information call 1-800-733-4763.

MANAGING DIVERSITY The University of Michigan-Dearborn's Center for Corporate and Professional Development helps you update your managing skills. The CCPD will be offering a course on "Diversity: Awareness & Understanding" March 20 and 21, 8 a.m. -5 p.m. The cost for this interesting program is $536 per person. Call

Eaton Says Governmental Regulations Negatively Impact Industry's Progress

From page 1

to Eaton, just one way the auto industry has streamlined and the government hasn't.

In 1978, the auto industry was at its peak employment at 1 million workers. That same year the federal government employed 2.8 million civilians. "Today the automotive industry has reduced its workforce to 575,000," he said. "What happened to those 2.8 million federal employees in the meantime? They grew by 100,000 (almost the size of Chrysler Corp.)."

Eaton also talked about process. "We figured out a few years ago that managing the process makes a lot more sense than just trying to manage the outcome," he said. "That's how we cut our workforce so much and got so productive."

Eaton continued by saying that no industry is more heavily regulated than the auto industry. He added that because the industry is so visible, there is no better target when the government pursues a crusade like voluntary recall.

Voluntary recall is negative for the industry, Eaton said, because of the bad public relations that go with a product recall.

"If you do what the government asks you to do, in the eyes of the public you must have a faulty product," he said. He referred to the dispute General Motors had concerning its pickup trucks as a prime example of where the automaker faces a no-win situation in public opinion.

Chrysler might be in a similar situation with one of its vehicles. Reports have criticized the car company for flawed rear door latches on its best-selling minivans from 1985 -94.

"The cost and the risk of defying them are too great for many companies to even contemplate," Eaton said of the agencies who regulate the industry.

Regardless, today's auto workers are more productive than in the past because of better management according to Eaton. In 1978, the industry produced 13 vehicles per employee. This year that figure is 21 vehicles per employee.

"We can continue this process," Eaton said of the improved production.

The federal government announced that the average price of a 1995 vehicle rose to approximately $20,000. Eaton said the government failed to include incentives when it calculated those figures, but that number could soon be reached due to government regulations.

"The public mood is decidedly anti-Washington, and that means the appetite for more rules and regulations is just about gone," Eaton said.

The auto industry itself needs to improve the affordability of cars, but with governmental interference it will be difficult to promote "Engineering for Value" according to Eaton.

"The future profits have to come from the product instead of the customer," he said. "Costs have to be engineered out, and they have to come out without compromising product integrity."

"I like religious fanatics, Sims—especially when they worship me."

TAB

17

STATE OF MICHIGAN

IN THE CIRCUIT COURT FOR THE COUNTY OF OAKLAND

CHRYSLER CORPORATION, a Delaware corporation,

Plaintiff,

-vs-

No. 94-489177-CZ
Hon. David F. Breck

PAUL SHERIDAN,

Defendant./

The deposition of ROBERT A. LUTZ,

taken pursuant to the Michigan General Court Rules before Rose Ann Zaidan, a Notary Public in and for the County of Oakland, acting in the County of Washtenaw, State of Michigan, at 2101 Hubbard Drive, Ann Arbor, on Friday, June 4, 1998, commencing at or about the hour of 9:20 o'clock A. M.

APPEARANCES:

KIENBAUM, OPPERWALL, HARDY & PELTON, P.L.C.,
BY THOMAS G. KIENBAUM, ESQ., (P15945),
and ROBERT B. BROWN, ESQ., (P51378),
325 South Old Woodward Avenue, Birmingham, MI 48009, 248-645-0000, appearing on behalf of the Plaintiff.

MAZUR, AMLIN, MORGAN, MEYERS & KITTEL,
BY COURTNEY E. MORGAN, JR., ESQ., (P29137),
and MICHAEL S. MAZUR, ESQ., (P29137),
1490 First National Building, Detroit, MI 48226, 313-961-0130, appearing on behalf of the Defendant.

ALSO PRESENT: Paul Sheridan

- - -

Rose Ann Zaidan, CSR-2217, RPR

R. A. ZAIDAN & ASSOCIATES, INC.
248-643-4740

press, which is a notoriously unreliable source.

Q. (BY MR. MORGAN) Okay. Let me show you what I've marked as Exhibit 3 and ask if you can identify that.

MR. KIENBAUM: Let me just note that this appears to be a document under protective order in the Jimenez (JIM-e-nez) --

MR. BROWN: Jimenez (HIM-e-nez).

MR. KIENBAUM: -- Jimenez (HIM-e-nez) case and I have no idea what the resolution of the Court's protective order is, but, you know, I...

MR. MORGAN: The document has in fact been published by the press. It was shown on CBS news on January 7, 1998. I can assure you, Mr. Kienbaum, I am legitimately in possession of this document.

MR. KIENBAUM: I said nothing about your possession. I'm only suggesting that if the press does something, that it doesn't necessarily mean that we as lawyers should not still be considerate of the order, whatever it may have been. That's all the point I'm making.

Secondly, we are getting squarely obviously into the issue that's precluded by the Court's order, so I don't know where we're going, but I suspect you're going to ask the question.

Q. (BY MR. MORGAN) My question is are you familiar with the document, sir?

A. I believe I have seen this document before.

Q. Okay. Did you know that NHTSA and Chrysler had agreed to endeavor to prevent the public from having access to their investigative files regarding the minivan latch?

MR. KIENBAUM: Let's have that one back please, could we?

(Whereupon the record, as requested, was read by the reporter).

A. Well, that's -- I would not say yes to the question characterized that way.

Q. (BY MR. MORGAN) The first bullet point under Crash Test Video and Public Record states that NHTSA has agreed they will deny all FOIA requests to place their investigative files, including the crash test video, on the public record and that the Department of Justice will defend any lawsuits seeking to compel production under FOIA.

A. Yes, that paragraph is there.

Q. And is that paragraph accurate? Did Chrysler and NHTSA agree to do that?

A. That's what this says.

MR. KIENBAUM: Well, have you asked the witness --

Q. (BY MR. MORGAN) Do you think it's proper?

MR. KIENBAUM: Have you asked the witness whether or not he knows what this is, knows anything about it, or are you simply asking him to read the document?

MR. MORGAN: I believe the witness has indicated some familiarity the document.

Q. (BY MR. MORGAN) Am I correct, sir?

A. Yes, I believe I've seen the document before.

Q. And this was a document that was presented to you while you were the Chief Operating Officer at Chrysler?

A. Right.

Q. And a member of the Executive Committee, correct?

A. That's correct.

Q. And did you know -- you learned at that time, sir, that NHTSA and Chrysler had agreed to deny all FOIA requests to place their investigative files, including the crash test videos, on the public record?

A. That is correct.

Q. And that the Department of Justice, funded by the taxpayers, would defend lawsuits seeking to compel

production under FOIA?

A. Where does it say --

Q. (Interposing) All right. I'll remove that clause and people can make their own conclusions about who paid the Department of Justice lawyers to do what it is they're doing.

MR. KIENBAUM: You're asking the witness now whether that was what this paragraph says?

MR. MORGAN: No, I'm asking him to affirm the fact that that agreement did take place and the Department of Justice did undertake to do those things.

A. All I really recall is that we came to a satisfactory resolution with NHTSA on how we were going to handle the action that they wanted to see taken on minivans and coinciding that with what we felt to be our legitimate interests.

Q. The crash test video referred to in that paragraph, is that the one done by NHTSA, the crash test, on the minivan?

A. I assume, yeah.

Q. All right. That's the one where the dummies, or the rear liftgate is seen opening and dummies are seen exiting the vehicle through the rear hatch opening?

MR. KIENBAUM: Mr. Morgan, we're getting

TAB

18

Inter Company Correspondence

To—Name & Department	Telephone	Date
	776-2909	January 27, 1993

From—Name & Department		CIMS Number
Please See Below		
R. A. Winter	General Product Manager - Minivan Operations C.T.C.	482-08-02

Subject: **Minivan Safety Leadership Team (SLT)**

TO:
D.P. Bostwick
T.M. Creed
D.E. Dawkins
R.L. Franson
M.R. Levine
T.S. Moore
J.W. Rickert
P.M. Rosenfeld
S.T. Rushwin
F.I. Sanders
R.A. Sarotte
C.P. Theodore
S.A. Torok

Safety has been an important consideration among Minivan buyers, and Chrysler has enjoyed a leadership position with the implementation of driver's air bag and child seats. The competition has passed us in 1993 by meeting passenger car safety standards, but we will retake the lead in 1994 with passenger side air bags.

In order to maintain our leadership position in this segment we need to provide a vehicle that has the most important safety attributes, and to that end the Minivan Safety Leadership Team is being formed. The purpose of the team is to re-establish Chrysler's advertisable safety leadership position, with particular emphasis on the NS-Body. The general format will focus effort in the areas of "Accident Avoidance", "Accident Survival" and other security issues, and the team will avail itself to all sources of expertise/assistance.

Attached is the current membership listing. Your support/awareness of this activity will enhance the ability of the team in this extremely important task. Your comments are welcome.

R.A. Winter

/sem
RAW#8\sltmemo

Attachment

NS-BODY
SAFETY LEADERSHIP TEAM (SLT)

- **Background**

  - Through its aggressive implementation of the air bag, and other safety related features, Chrysler enjoyed an advertisable safety leadership position through the 1990/1991 timeframe.

  - Current and projected competitive activity in the area of safety will erode our leadership position to that of parity, especially in the minivan segment.

- **Purpose/Mission Statement**

  - Accurately assess our current and projected status in the area of safety, using the following as a basis for discussion:

    ▹ 1995 AS-Body exit levels

    ▹ Documentation/specification of regulatory compliance plans

  - Define specific additional requirements/actions to re-establish an advertisable leadership position.

  - Focus will be on the NS-Body and the minivan segment, but SLT activity will be formatted to be transferrable/accessible to other platforms.

  - Monitor safety innovations.

  - Monitor competitive activity.

  - Estabilish/monitor consumer acceptance.

- **Format**

  - It is proposed that the SLT examine the safety leadership issue in the context of the following categories:

    ▹ Accident Avoidance
      - ABS
      - Traction Control/Enhancement
      - Speed Dependent Steering
      - Active Suspension
      - Driver Information Enhancement

- **Format** (continued)

  - ▹ Accident Avoidance (continued)
    - – Exterior Lighting/Signaling
    - – Mirrors/Visibility
    - – Back-up Alert

  - ▹ Accident Survivability
    - – Air Bags (Active)
    - – Occupant Restraints (Passive and Active)
    - – Crash Management
    - – Crash Intrusion
    - – Bumper Integrity
    - – Side Impact
    - – Roof Crush
    - – Rollover
    - – Seat Back Strength
    - – Headrests
    - – Glass Retention

  - ▹ Other
    - – Anti-theft
    - – Security Systems
    - – Mechanical Reliability
    - – Communications
    - – Comfort (anti-fatigue)
    - – IVHS

- **Organization/Membership**

  - Minivan Operations (Chair)
  - Safety Office
  - Engineering
  - International Operations
  - Liberty
  - Marketing
  - Sales
  - Design Office
  - Competitie Information Activity

  - ▹ Additional organization involvement will occur as appropriate.

- **Other**

  - To be effective, the SLT will require <u>empowerment</u> via executive level recognition of the SLT mission, and resultant dedication of staff support.

  - Meeting time tentatively set to alternate with existing Minivan Complexity Team on Tuesdays, 8:15 - 9:00 a.m.

  - Initial agenda priority will be review of the NS-Body ABS strategy.

NS-BODY
SAFETY LEADERSHIP TEAM (SLT)

MEMBERSHIP

Organization	Representatives	CIMS	Telephone	Telefax
Minivan Operations*	Paul V. Sheridan	482-08-02	776-4824	776-2261
Safety Office	Ronald S. Zarowitz	415-03-21	876-1126	822-5069
Engineering	TBD			
International Operations	Gregory A. Blindu	415-03-05	876-5983	876-4752
Liberty	TBD			
Marketing	William H. Hines (Dodge) Mark W. Clemons (C/P)	414-04-40 414-04-35	876-5523 876-3763	822-6957 822-6957
Sales	James L. Boeberitz	414-05-29	876-3942	822-7431
Design	TBD			
Competitive Information Activity	Michael T. Delahanty	414-02-16	876-1464	876-4241

*Chair

TAB 19

IAN
MER
knocks
festival
Page B-1

LIVING

JAM
TIME

Enjoy fruits
of your
Pa

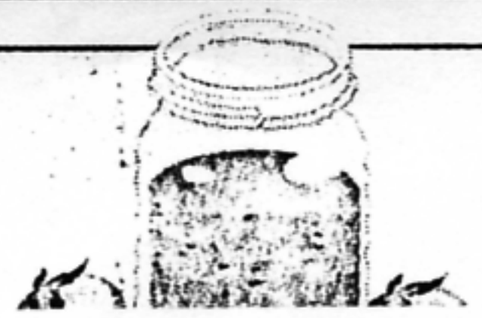

Monday
June 22, 1992

INDEX

Cloud

Area-Metro
Bridge
Classified
Comics
Crossword
Editorial
Entertainment
Farm

70 The Saginaw NEWS

Mid-Michigan traffic kills three

Two children of CMU psychology professor among victims

BY DAVID OSBORN
News Staff Writer

MOUNT PLEASANT – Central Michigan University psychology professor Timothy S. Hartshorne teaches his students how to help children cope with tragedy.

Today, his home is the classroom.

Hartshorne, 43, had left the Mount Pleasant Summer Festival about 5:30 p.m. Saturday with his wife, Nancy S., and five children when his 1985 mini-van collided with another vehicle.

The impact threw their daughter, Katherine, 15 months, and Michael, 8, from the van, killing them.

The children were among at least three mid-Michigan fatalities this weekend. Robert C. Rutledge, 40, of Sanford, died when a car struck him as he walked about 2 a.m. Sunday near U.S. 10 in Isabella County's Wise Township.

Hartshorne's three other sons were injured in the Mount Pleasant crash. Joshua K., 11, and Nathan S., 9, were in good condition today at Central Michigan Community Hospital and doctors treated Jacob, 3, a spokeswoman said.

Jacob is deaf, visually impaired, and suffers from eating disorders, the father said.

"That's my area, therapy and children. But you can learn all that stuff and you teach it to other people, but it's different when it's you," said Hartshorne, who began teaching at CMU three years ago.

Hartshorne was driving east on Lincoln and a vehicle driven by John J. Guzman, 17, of Shepherd, was heading south on Kinney when they collided, said Julie L. Parks, a clerk with the Mount Pleasant Police Department.

Hartshorne recalled the impact, spinning, and then the van crashing on its side.

After the vehicle came to a halt, Jacob was crying and Joshua and Nathan were moaning, he said.

"I saw no sign of Michael and Katie," he said, noting the two were wearing seat belts.

Nancy Hartshorne received minor injuries.

The family had piled into the mini-van that day to attend the Summer Festival, where the children enjoyed carnival rides.

On Saturday Katherine was 15 months old, and it marked the first time she walked on her own, Hartshorne said.

"That was exciting," he said.

Michael enjoyed playing soccer, baseball and hockey and was a sociable child, Hartshorne said.

"He was very outgoing. He would pick flowers in our yard and take them to neighbors we didn't even know."

Hartshorne has set up counseling for himself and his family.

"It's the worst thing that has ever happened to me – or could ever happen to me," he said.

Fire safety efforts earn award

BY FRED E. GARRETT
News Staff Writer

A St. Charles resident's efforts to make mailbox addresses more visible has earned him the stamp of approval from the Michigan State

Charles and the townships of St. Charles, Swan Creek and Brant.

"I was totally surprised," said Morse, 510 Christy Drive. "I thought I had gone to Clare to make a presentation on MAIL.

"I'm proud and honored. But fire

mailboxes.

"Dave now is talking all over the state about mailboxes," said Rick Bolly of Plymouth, presi-

TAB 20

Thursday, January 17, 1991 Vol. 11, No. 2

CHRYSLER CORPORATION

Times

A weekly newspaper for Chrysler employees and their families

Lutz named Chrysler Corporation President

Chrysler reorganizes to promote teamwork

Chrysler made a series of organization changes Jan. 14, most of which are designed to strengthen the company's commitment to the platform team concept.

• Robert Lutz has been named President of Chrysler Corporation. His former title, President of Chrysler Motors, as well as the title of Chairman of Chrysler Motors, have been discontinued. Lutz is responsible for all North American automotive activities including sales, marketing, product development, procurement and supply, and manufacturing. He is also responsible for Acustar, Chrysler's parts subsidiary, and Chrysler operations in Mexico.

In addition, four general managers were appointed to coordinate all product development and market and consumer inputs for both current and future product lines. The four appointees are all currently company vice presidents and will retain their present areas of responsibilities in addition to their new general manager duties. All four executives report to Lutz.

• Ronald Boltz has been appointed General Manager—Small Car Operations and con-

see **Platform,** *page 4*

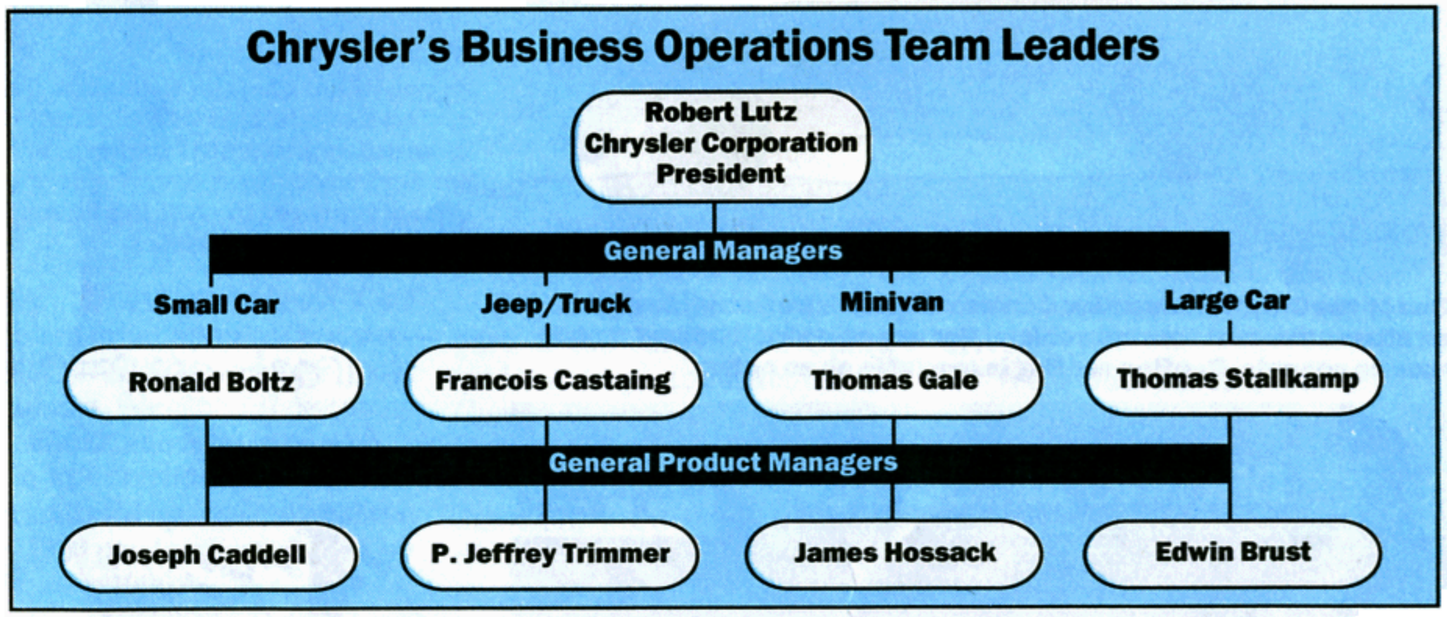

Briefs

Gulf crisis prompts security measures

Chrysler Security and Fire Prevention departments have increased precautionary security measures at U.S. manufacturing plants and major office locations in response to the Persian Gulf situation and the possibility of terrorist attacks.

Many of the preparations may not be noticeable, but increased personal identification and vehicle checks at traffic gates may result in delays while entering or leaving Chrysler facilities.

The Security Office also asked that employees notify local security personnel if they hear or notice anything out of the ordinary—for example, a package in an unusual location or unknown people or vehicles loitering around plant entrances.

International travel curtailed

Chrysler Special Security Operations issued a travel advisory suspending all international business travel with the exception of

brand-name drug whose patent has expired. A generic drug is sold under a common or "generic" name for that drug, not the brand name. Generics often become available for sale shortly after the patent on the brand-name product expires. And generic drugs usually cost less than brand-name drugs, yet work just as well.

There are more than 200 manufacturers of generic drugs in the United States. Some companies make only generic drugs while other companies make generic drugs.

If you have a specific question about your prescription, ask your pharmacist. In about two out of three cases, when a generic drug is available, the pharmacist will dispense a generic drug rather than a brand-name drug. This is because generic drugs cost less and save patients money, and they usually achieve the same medical results.

If you're concerned about the safety of your generic product, ask your pharmacist. Pharmacists receive bulletins from the Remember, if you have a prescription that you are supposed to take until it is gone, do not stop taking it unless you have checked with your physician or pharmacist.

If your doctor determines it is medically necessary for you to receive a brand-name drug, he or she will write "DAW" (dispense as written) on the prescription. If your doctor does not specify DAW, and you request the brand-name drug from the pharmacist, you will be responsible for the difference in cost.

Market share ceiling sought

continued from page 1

increase in Japanese U.S. transplant production in recent years," Iacocca said.

"With their U.S. transplant factories producing 1.5 million units annually and growing, and with Japan's market share in the United States at 30 percent and growing, now would be an appropriate time for Japan to agree to a total market share restraint that would include both transplant and imported units.

"This approach would allow continued growth in U.S. tra plant operations while Japan built-up imports, which cont no U.S. added value and supp no U.S. manufacturing jo would decline," Iacocca said.

Following Japan's annour ment on import restraints, 1 members of Congress release letter they sent to Japan's Pri Minister Toshiki Kaifu expre ing disappointment in Japa response to the Gulf crisis a urging "meaningful" restrai on auto exports. Ford Chairn Harold Polling also called Japan to roll back its exports.

Platform team concept expands; general managers named

continued from page 1

tinues as Vice President—Product Strategy and Regulatory Affairs.

- Francois Castaing has been appointed General Manager—Jeep/Truck Operations and continues as Vice President—Vehicle Engineering.
- Thomas Gale has been appointed General Manager—Minivan Operations and continues as Vice President—Product Design.
- Thomas Stallkamp has been appointed General Manager—Large Car Operations and continues as Vice President—Procurement and Supply.

Chrysler Chairman Lee Iacocca said, "The platform team concept we launched for the development of the new LH program is succeeding beyond our most optimistic expectations.

"The cross-functional teamwork idea is working so well that we decided to apply it to all of our product lines and broaden it to include not only the product development process, but also the important market and consumer inputs necessary to bring world-class vehicles to market.

"These new general managers," Iacocca added, "will be positioned to pull it all together because that's what it's going to take to compete in the '90s—great products totally in sync with our customers."

The new Business Operations activities will be organized on a cross-functional team basis and will incorporate Chrysler's existing platform team functions, expanded to include representatives from planning, sales, marketing, service and consumer activities.

Each of the team managers will have a general product manager:

- Edwin Brust has been appointed General Product Manager—Large Car.
- Joseph Caddell has been appointed General Product Manager—Small Car.
- James Hossack has been appointed General Product Manager—Minivan.
- P. Jeffrey Trimmer has been appointed General Product Manager—Jeep/Truck.

Chrysler also announced that Thomas Denomme has been named Executive Vice President—Corporate Staff Group. He had been Vice President—Corporate Planning and External Affairs.

Effective with this change, Anthony St. John, Vice President—Employee Relations, and Gino Giocondi, Vice President—Quality and Productivity, will now report to Denomme. They had reported to Lutz.

Denomme's responsibilities include Strategic Planning, Communications, Civic and Government Affairs, and Washington Affairs, in addition to Employee Relations and Quality and Productivity.

Concurrently, Corporate Economist Donald Hilty is reassigned from Denomme to Chrysler Corporation Vice Chairman R. Steve Miller Jr.

Times

Chrysler Times is published by Communication Programs, a department of Chrysler Corporate Communications, for all Chrysler employees, retirees and their familie Comments or questions should be addressed to:

CHRYSLER TIMES
Allan Nahajewski, Editor
Pamela M. Gross, Associate Editor
CIMS 416-13-06
Highland Park, MI 48288-1919

News updates are available daily through the *Chrysler Employee New Daily* system. Call tieline 876-2345 or, via computer, touch PF1 on the InfoCenter Main Menu.

Chrysler Times is printed on recyclable paper.

TAB

21

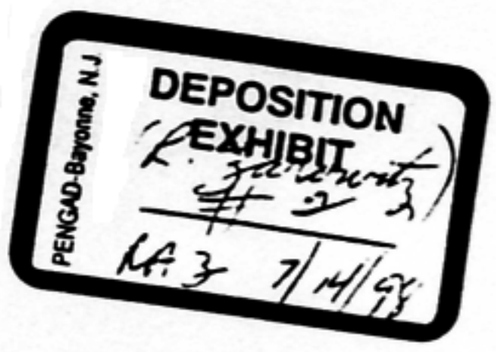

NS-BODY
SAFETY LEADERSHIP TEAM (SLT)

	Members	CIMS	Telephone	Telefax
	Gregory A. Blindu	415-03-05	876-5983	876-4752
	James L. Boeberitz	414-05-29	876-3942	822-7431
▹	Mark W. Clemons	414-04-35	876-3763	822-8984
	Mark W. Crossman	482-02-13	776-4757	776-2250
▹	Michael T. Delahanty	483-10-08	776-6742	776-2822
▹	William H. Hines	414-04-40	876-5523	822-6957
	Neal E. Hoxsie	482-12-02	876-4898	776-2261
▹	Harlan E. Kifer	483-46-10	776-1258	776-2048
▹	Frank O. Klegon	482-12-01	776-2843	776-4516
▹	Kenneth S. Mack	463-00-00	880-5222	880-5234
	Richard Medel	233-02-22	833-2800	833-2792
▹	Fred W. Schmidt	482-10-02	776-4827	776-2261
▹	Paul V. Sheridan	482-08-02	776-4824	776-2261
▹	Ronald S. Zarowitz	415-03-21	876-1126	822-5069

CC

D. Bostwick	414-02-10	T. Moore	463-00-00
T. Creed	483-56-02	J. Rickert	482-02-08
D. Dawkins	415-03-17	F. Sanders	482-12-02
R. Franson	415-05-30	R. Sarotte	450-03-16
J. Herlitz	483-56-02	C. Theodore	482-08-02
K. Horbatink	414-05-29	S. Torok	414-04-41
M. Levine	414-04-40	R. Winter	482-08-02
D. Malecki	482-08-02		

AGENDA
MARCH 16, 1993, 8:15 - 9:00 a.m.
CTC PROCESS COURT - CONFERENCE ROOM 2A

"60 Minutes" Seatback Strength Video . . . . . P. Sheridan
NS-Body Safety Features List . . . . . P. Sheridan

▹Attended March 9 meeting.

CBS VIDEO
19 GREGORY DRIVE
SO. BURLINGTON, VT 05403
800-848-3256

CBS VIDEO = UPS SHIPPER NO.
19 GREGORY DRIVE = VT 047-471 =
SO. BURLINGTON, VT 05403 = PKG.ID 2245517 =
800-848-3256 ==========

SOLD TO
PAUL V SHERIDAN
22357 COLUMBIA STREET
DEARBORN MI 48124

PAUL V SHERIDAN
22357 COLUMBIA STREET
DEARBORN MI 48124

INVOICE DATE	DATE SHIPPED	OUR ORDER NO.	YOUR ORDER NO.	CUSTOMER NO.	TERMS	SHIPPED VIA
3-24-92		2245517		48124SV01	30 DAYS	UPS GROUND-RES.

QUANTITY ORDERED	QUANTITY SHIPPED	B/O	ITEM NO. PICK LOC.	DESCRIPTION	PRICE	AMOUNT
			* * * THIS ORDER FILLS A BACKORDER * * *			
			* * * ORIGINAL INVOICE NUMBER - 2102183 * * *			
1	1		T0216C A	CAR SEATS	29.95	29.95
				TOTAL PIECES SHIPPED: 1		
						29.95
				HANDLING CHARGE		3.50
				INVOICE AMOUNT		33.45
				Payment: Visa has been accepted.		33.45
				AMOUNT DUE:		0.00

RETURNS ONLY IF DEFECTIVE; EXCHANGE ONLY

STATE OF VIRGINIA

IN THE CIRCUIT COURT OF PRINCE WILLIAM COUNTY

ALLYNNE L. BAIRD, Executrix
of the Estate of GEORGE N. BAIRD,
Plaintiff,
vs.
Law No. 34389
CHRYSLER CORPORATION, et al.,
Defendants.
_____/

APPEARANCES:

STEWART TILGHMAN FOX & BIANCHI, P.A.,
44 West Flagler Street, Suite 1900,
Miami, Florida 33130.
For the Plaintiff.
BY: DAVID W. BIANCHI.

CHAMBERS, STEINER, MAZUR, ORNSTEIN & AMLIN, P.C.,
1490 First National Building,
Detroit, Michigan 48226.
For the Deponent.
BY: COURTNEY E. MORGAN, JR.

VIDEOTAPED AND CONFIDENTIAL
DEPOSITION OF PAUL V. SHERIDAN
(Taken July 24, 1995)

CONFIDENTIAL

NATIONAL ... INC.
20660 ... 110
SOUTHFIELD, ... 1076
(313) ...

TAB

22

Inter Company Correspondence

To — Name & Department		Telephone	Date
J.K. Nemeth	General Manager, Mini-Van Platform	C.C.	July 27, 1990
From — Name & Department			**CMS Number**
H.G. Cook	Manager, Doors, Hardware and Sealing Engrg.	C.C./Aero	418-04-42
			416-25-14

Subject: **MINI-VAN LIFTGATE LATCH - LOAD CAPACITY**

As a result of an inquiry from NHTSA concerning the safety performance of the rear liftgates and latches, Mini-Van Door Engineering evaluated the capability of the 1991 AS-Body liftgate latch relative to FMVSS No. 206 "Door Locks and Door Retention Components" which specifies side door component requirements. FMVSS No. 206 essentially requires the following for a side door latch and striker assembly:

- Primary and secondary latch positions.
- Non-separation under a longitudinal load of 2500 lbs. on primary and 1000 lbs. on secondary.
- Non-separation under a transverse load of 2000 lbs. on primary and 1000 lbs. on secondary.

A cursory analysis of the 1991 AS-Body liftgate latch and some competitive vehicles provided the following:

Vehicle/Spec.	Primary Longitudinal/Transverse (Vertical/Open)	Secondary Longitudinal/Transverse (Vertical/Open)
FMVSS No. 206 Requires	2500/2000	1000/1000
Chrysler Specification Requires	----/750	----/----
1991 AS-Body Pull Test	3200/1300	None
Ford Aerostar Specification	3100/2500	1250/1250
GM APV Specification	2000/1350	2000/1000
Nissan Axxess	Latches contain both primary and secondary positions - load capacities unknown.	
Toyota Previa		

In order to modify the present AS-Body latch to meet the 2000 lb. primary transverse load requirement, the ratchet would require redesign to increase thickness and width and both the ratchet and pawl would require a higher strength steel. The piece cost penalty is estimated to be $.25 to $.50 and the tooling cost covering both suppliers is estimated to be $125,000. The timing to modify the latch is approximately 32 weeks.

84-110-7878

Door Engineering is presently conducting a study to incorporate a MAGNA latch system in the 1994 AS-Body. This MAGNA latch, which is presently released for the 1992½ ZJ, offers several improvements and would meet the FMVSS No. 206 primary strength requirements. It does not include a secondary latch position.

Based on Chrysler's position, as stated in our response o NHTSA that we do not believe there is a significant problem with liftgate retention, I recommend that we continue with the current latch system at least through 1993 unless mandated to change by NHTSA.

Our plan is to have trend numbers on piece cost and investment for the MAGNA latch by 8/1/90 so that Program Management can include this proposal in the Lutz presentation on 8/10/90. Our detailed study is scheduled for completion approximately 10/1/90. Please contact me if you need additional information.

H. G. Cook

H.G. Cook

/jmm

cc: E.J. Laginess
R.A. Blazic
R. Schwartz

TAB

22

P.14 AUTOCAR MAGAZINE
30 JUNE 1999

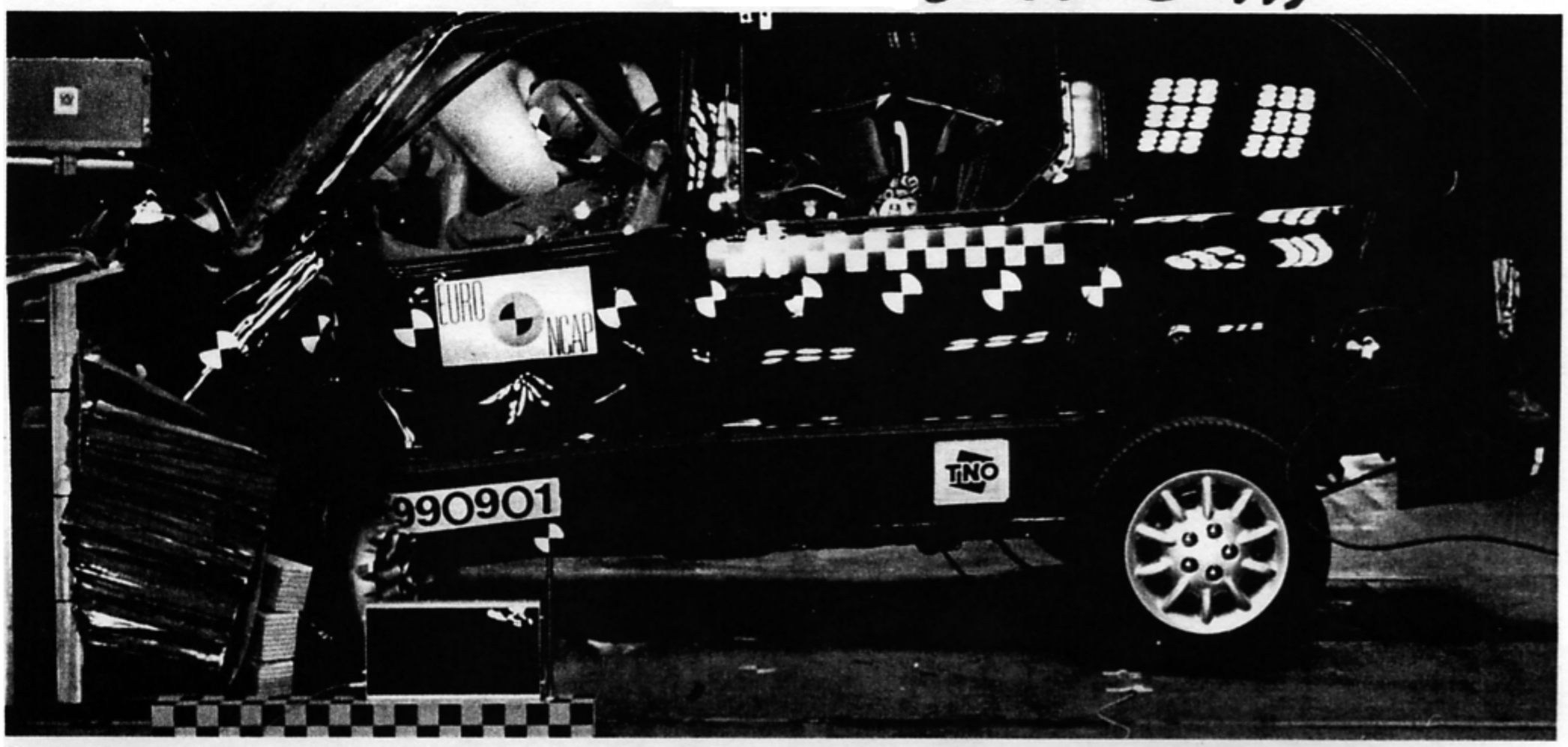

Chrysler Voyager singled out for poor performance in latest Euro NCAP crash tests; it fared so badly in frontal impact that it was not awarded a score

Voyager gets zero in crash test

Chrysler's Voyager has been given the lowest-ever score in the latest round of Euro NCAP crash tests.

The Voyager, the UK's second best-selling MPV, was given a zero rating in a 40mph head-on collision – which means that there was virtually no chance of escaping life-threatening injuries. By contrast, the Renault Espace was given a 67 per cent rating, making it the best in class.

Other poor performers included the new Mitsubishi Space Wagon and the discontinued Vauxhall Sintra, which received 24 per cent and 21 per cent respectively. NCAP safety experts said that the

Top-scoring Espace awarded four stars in frontal impact tests; overall score 84 per cent

HOW NCAP'S DUMMY DRIVERS FARED

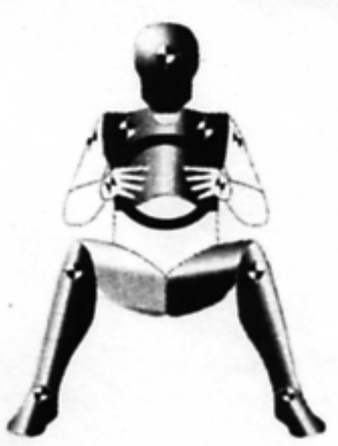

CHRYSLER VOYAGER		RENAULT ESPACE	
Front and side impact rating	★★☆☆	Front and side impact rating	★★★★
Pedestrian test rating	★☆☆☆	Pedestrian test rating	★★☆☆
Test scores: Front	0 per cent	Test scores: Front	67 per cent
Side	89 per cent	Side	100 per cent
Overall	45 per cent	Overall	84 per cent

Good · Adequate · Marginal · Weak · Poor

US NEWS HOWARD WALKER

Volkswagen's Beetle plant in Mexico escaped serious damage in last week's earthquake, which measured 6.7 on the Richter scale.

Chrysler's first museum opens in Detroit in October. The Walter P Chrysler Museum will have 75 cars and trucks from the company's past.

Fender-bending drivers should avoid the Mitsubishi Shogun. In US insurance tests in which 4x4s were crashed at 5mph, the Shogun suffered $6242 (£3950) in damage, the Merc ML320 just $2918 (£1845).

Hummer has released a list of its celebrity owners. Boxer Mike Tyson has six, while movie star Arnold Schwarzenegger owns five. Others include tennis champ Andre Agassi, writer Tom Clancy and actor James Earl Jones.

Parts threat from BMW

BMW chairman Joachim Milberg has warned that Rovers will use more imported parts if the pound stays at its current high level.

Milberg, speaking after BMW secured a £152 million Government grant to save Longbridge, said the Rover 75 had only 75 per cent British parts against the 600's 85 per cent.

BMW will invest £3 billion in Rover in the next five years, starting with the 200 and 400 replacements.

Milberg: sterling too strong

MINIVAN1.SCR
7/Orr/Triay/Goldman/Shaffir
Chrysler Air Bag Deaths
Evening News 5/17/99

VO: THIS IS THE CRASH TEST THAT STUNNED FEDERAL REGULATORS. THE PASSENGER DUMMY IN THIS 1997 CHRYSLER MINIVAN SUSTAINED LIFE-THREATENING INJURIES -- INJURIES CAUSED BY THE VEHICLE'S AIR BAG.

NOW, CBS NEWS HAS LEARNED, THE NATIONAL HIGHWAY TRAFFIC SAFETY ADMINISTRATION, HAS COMPLETED 11 ADDITIONAL TESTS OF CHRYSLER MINIVAN AIR BAGS. AND IN MORE THAN HALF OF THOSE TESTS, THE PASSENGER SIDE AIR BAG CAUSED WHAT WOULD BE CATASTROPHIC INJURIES.

CHRYSLER CHALLENGES THE GOVERNMENT'S TESTING METHOD, CLAIMING THE SMALL DUMMY USED ISN'T YET PERFECTED...AND CHRYSLER CLAIMS ITS OWN TESTS SHOW THE AIR BAG IS SAFE.

(GRAPHIC #1)
SUSAN CISCHKE, CHRYSLER'S VICE PRESIDENT OF SAFETY, SAYS "WE DON'T BELIEVE THERE IS ANYTHING WRONG WITH THE AIRBAG SYSTEM."

(GRAPHIC # 2)
BUT, ALSO TROUBLING TO REGULATORS... IS WHAT THEY FOUND WHEN THEY TOOK A SECOND LOOK AT ACTUAL ACCIDENTS. THE GOVERNMENT'S SPECIAL CRASH INVESTIGATION HAS FOUND OF THE 22 AIR BAG RELATED DEATHS AND SERIOUS INJURIES OF PASSENGERS IN MINIVANS....20 OF THEM HAVE BEEN IN CHRYSLER MODELS, BUILT BETWEEN 1994 AND 1996.

Ditlow walk: NATS
"THE BAG IS TOO AGRESSIVE...."

VO: TWO AND A HALF YEARS AGO CLARENCE DITLOW, AN AUTO SAFETY ADVOCATE....

(GRAPHIC #2)
ASKED THE NATIONAL HIGHWAY TRAFFIC SAFETY ADMINISTRATION TO INVESTIGATE THE CHRYSLER AIR BAG. AT THE TIME THERE HAD BEEN NINE PASSENGER FATALITIES. THE REQUEST WAS TURNED DOWN.

SOT/DITLOW 28-10 THE GOVERNMENT NOW HAS THE DEATHS IT WANTS. THE GOVERNMENT SHOULD NOW ORDER CHRYSLER TO DO A RECALL IF CHRYSLER WON'T DO IT ITSELF

NATS: ORR AND SANDERS WALKING

VO: ROB SANDERS ALSO WANTS CHRYSLER TO MAKE CHANGES. HIS DAUGHTER ALLISON WAS KILLED IN 1995 IN A LOW SPEED COLLISION INVOLVING THE FAMILY'S CHRYSLER MINIVAN.

THE SEVEN YEAR OLD HAD SLIPPED OFF HER SHOULDER HARNESS TO REACH FOR THE RADIO WHEN THE CRASH HAPPENED. THE AIR BAG EXPLODED IN ALLISON'S FACE.

SOT/ROB SANDERS
2105 AND THEN I TURNED OVER AND LOOKED AT ALLISON AND SAW THAT SHE WAS UNCONSCIOUS AND I WAS JUST SHOCKED AND HORRIFIED. I COULDN'T UNDERSTAND WHY SHE WOULD BE IN THAT KIND OF CONDITION IN SUCH A MINOR FENDER BENDER ACCIDENT.

VO: SANDERS IS NOW SUING CHRYSLER, ALLEGING THAT A DEFECTIVE AIR BAG SYSTEM CAUSED HIS DAUGHTER'S DEATH.

BUT, CHRYSLER SAYS, LIKE ALLISION SANDERS, NEARLY ALL OF THOSE KILLED WERE UNBELTED OR IMPROPERLY BELTED. CHRYSLER ALSO POINTS OUT IT HAS TWO THIRDS OF ALL MINIVANS ON AMERICA'S HIGHWAYS AND THEREFORE FACES A STATISTICALLY HIGHER PROBABILITY OF ACCIDENTAL DEATHS.

ALSO, CHRYSLER SWITCHED TO A LESS FORCEFUL PASSENGER SIDE AIR BAG DURING THE 1997 MODEL YEAR. AND WITH OTHER AUTOMAKERS, IN 1998, BEGAN USING AN EVEN LOWER-POWERED AIR BAG.

ORR CLOSE:
BUT, NEARLY TWO MILLION OLDER CHRYSLER MINIVANS, WITH THE ORIGINAL, MORE POWERFUL, AIR BAGS REMAIN ON THE ROAD. AT THIS POINT, CHRYSLER SAYS THERE IS NO NEED FOR A VOLUNTARY RECALL. BUT SOURCES SAY THE GOVERNMENT IS CLOSE TO DECIDING WHETHER TO LAUNCH A FORMAL "DEFECTS" INVESTIGATION THAT MAY ULTIMATELY FORCE THE ISSUE. BOB ORR, CBS NEWS, WASHINGTON.

VIA SATELLITE

USA TODAY

Money

FRIDAY, DECEMBER 15, 1995

MC

MONEYLINE

A QUICK READ ON THE TOP MONEY NEWS OF THE DAY

MARKETS

THURSDAY

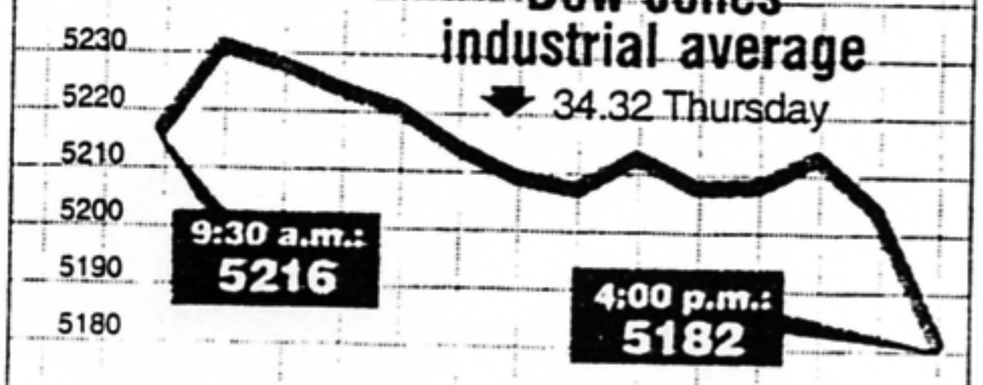

Nasdaq composite	1038.19	▼ 18.35
S&P 500	616.92	▼ 4.77
T-bond, 30-year yield	6.08%	▲ 0.01
T-bill, 3-mo. discount rate	5.26%	— unch.
Gold, oz., Comex	$386.00	▼ $0.40
Lt. sweet crude oil, N.Y. Merc.	$19.11	▲ $0.11

Market Scoreboard, 3B

CHIP TRADE: **Foreign companies' share of the** Japanese market for computer chips hit an all-time high of 26.2% the third quarter, the Clinton administration said Thursday. The White House said that is proof a controversial 1986 U.S.-Japan semiconductor trade agreement is working and should be renewed. The old record: 23.7% in fourth-quarter 1994. Japan says the pact is unnecessary and amounts to managed trade.

CRASH TESTS: **Chrysler's Dodge Grand Caravan** received the lowest score for driver protection among six 1996 minivans tested in 35-mph frontal crashes by the National Highway Traffic Safety Administration. The safety agency rates crash protection from one to five stars, with five the best head-and-chest protection. In results released Thursday, the Chrysler minivan scored three stars for driver protection and four for passenger. Top minivans: Ford Windstar, with five stars for drivers and passengers in an earlier test. The Ford Taurus sedan and Dodge Neon each received four stars both for driver- and-passenger protection. Lowest: the Toyota Tacoma pickup, at two stars for drivers and three for passengers. Vehicles are required to pass 30-mph crash tests. NHTSA conducts the higher-speed tests to help consumers compare vehicles.

Business Trave

By Rhonda Richard

'Round the Wor
resumes Pan Am's o
the-World service to
the first flight leaves
les for Hong Kong; N
India; London; and N

Weather watch:
ice are expected tod
parts of the Northea

Holiday rates: H
rates ranging from $
a night on some roon

'News

Microsoft and Gen
and an interactive
will begin operatio
for a 50% stake in
and MSNBC Onlin

NBC News

Continues broadca
national and interna
over regular TV ch

MSNBC Cabl

24-hour basic cable
will provide in-depth
and news shows. It
NBC's America's Ta
cable systems.

Microsoft Network Onlir

For a subscription f
users will be able to
personal data about
and get customized
information, plus ful
video and sound fro
They'll be able to fa
and rewind the vide

What you coul to get MSNBC

Estimated monthly c

Basic cable
Microsoft Network
Cable modem renta
Total

1 – Standard plan, 3 hrs. connect addtl. hour.
2 – Cable modem needed for full-

Source: NCTA, USA TODAY rese

Investors shell out

INTERACTIVE EDITION. FROM THE ARCHIVES

AS LOW AS $1,279
Configure and order online!

COMPAQ Direct

March 2, 1999

Regulators Raise Questions on Air Bags As Minivan Study Has Surprise Result

By ANNA WILDE MATHEWS and JEFFREY BALL
Staff Reporters of THE WALL STREET JOURNAL

Federal auto-safety regulators who set out to determine whether trucks pose an outsized hazard on the road scored another hit on air bags instead.

U.S. regulators said Monday that during crash tests involving several different types and makes of vehicles, staged last summer to gather data about the hazards light trucks pose to cars in collisions, a 1997 Dodge minivan air bag deployed with such force that a small female dummy seated on the passenger side showed far-worse-than-expected results for neck injury.

Safety experts said the outcome could well be equivalent to a broken neck in a real woman.

The disclosure -- which surprised officials of DaimlerChrysler AG, maker of the Dodge miniva -- partly overshadowed the National Highway Traffic Safety Administration's findings about car-truck crash safety. The government said its tests confirmed that light trucks tend to do more damage in accidents, but concluded that more study is needed before any regulatory action. A separate study from researchers at the University of Michigan concluded that 2,000 people died in 1996 because their cars were hit by a truck instead of a car with more forgiving crash performance.

Interest in the issue was spurred by the increasing numbers of light trucks and sport utility vehicles on the road.

But agency officials said the surprising data from the air-bag incident have caused them to take immediate actions, launching new research into **Chrysler** minivan air bags. The agency said it expects to wind up the probe this summer. One question is whether the result was caused by a quirk in the design of the dummy.

The passenger air-bag system used in the 1997 model was also used in 1996, DaimlerChrysler said, but not in 1998 or 1999, when federal regulations changed to allow less-powerful air bags. The company

Journal Atlas:
Table of Contents
Headlines
Business Index
Search
News Search
Past Editions
Briefing Books
Quotes

Resources:
Help
New Features
Your Account
Contact Us
Glossary
Special Reports

Select exchange:
U.S.
Enter symbols:
Go
Symbol lookup

Related Sites:
Barron's Online
Careers.wsj.com
DJ University
Personal Tech
Publications Library

Publications Library
SmartMoney.com
wsj.com Radio

Corrections

sold about a million of the 1996 and 1997 minivans.

Order in Philadelphia

The announcement comes at a bad time for DaimlerChrysler, which has long emphasized the safety of its minivans to families. Earlier last month, a Philadelphia jury ordered the company to pay an estimated $63.6 million to Pennsylvania owners of **Chrysler** cars from the late 1988, 1989 and 1990 model years whose driver-side air bags could burn a driver's hands when the bags deployed. The company plans to appeal.

The NHTSA announcement, made at the Society of Automotive Engineers conference in Detroit, also comes as DaimlerChrysler and its competitors are pushing harder than ever to develop more-sophisticated technology to alleviate public concerns about air bags.

Air bags deploy in a collision when an explosive charge inflates a fabric bag, and they have saved thousands of lives. But high-powered air bags also have killed 125 people, mostly children and small adults, since 1990. Both Ford Motor Co. and General Motors Corp. have announced plans to introduce so-called smart air-bag systems that would pose less threat to children and small adults. Federal regulators are moving to mandate such systems for all light vehicles.

But in the meantime, auto makers face risks of litigation and potentially costly recalls related to previous-generation airbag technology, which was effectively mandated by the government.

A spokesman for DaimlerChrysler, which was only informed of the test outcomes Monday, said the company was "outraged that NHTSA would wait almost eight months to release these results." The spokesman said the company is "taking NHTSA's concerns very seriously, and we share their concerns." He said it would be "speculative" to gauge the test's effects on the company's liability.

Petition in 1996

Safety advocates filed a petition in 1996 for a safety investigation of the air bags in **Chrysler** minivans, along with two models from other companies. The NHTSA turned down the request by the Center for Auto Safety, which centered on the air bags' tendency to deploy in low-speed crashes.

If a systematic problem were eventually found with the passenger-side air bags, a recall and replacement would likely be very costly, because of the complexity of the air-bag system.

In the test that caused the recent result, the NHTSA was ramming the minivan into the left front of a midsize sedan. Both vehicles were moving at 35 miles per hour, and the dummies in the front seat were wearing seat belts. Federal regulators have proposed that auto makers be required to score 1.4 or lower on the neck-injury criteria; the minivan scored 4.4 on the test.

DaimlerChrysler's competitors cautioned against reading too much

into the NHTSA announcement. "That could just be a bad test," said a Ford spokeswoman, who added that Ford is "very comfortable" with the safety of its own air-bag systems. At GM, Bob Lange, director of safety engineering, assailed the way NHTSA released the results. "It's difficult to be blindsided by a test result that, on its face, appears to be pretty negative."

The studies on crashes involving cars and trucks confirmed earlier NHTSA findings that the weight and design of a light truck affect how much damage it does to a car. Heavier trucks, with front ends that are less likely to crush in a crash, do more harm. Moreover, the location of the crash has an effect: A front-to-side impact does more damage than a front-to-front accident.

In a separate study released Monday at the Detroit conference, researchers found that three-point seat belts provided the best protection for pregnant women, while a powerful air bag could pose risk to the fetus. The researchers, from the University of Michigan, estimated that 1,500 to 5,000 fetal losses occur each year in the U.S. because of all auto crashes.

AS LOW AS $1,279
Configure and order online!

COMPAQ DirectPlus

Return to top of page | Format for printing

Copyright © 1999 Dow Jones & Company, Inc. All Rights Reserved.

Article 7

Return to Headlines

NEWS
`Both Air Bags Exploded' / Man says he turned van's key, and in a flash he was hurt
Merle English. STAFF WRITER

04/03/99
Newsday
QUEENS
Page A21
(Copyright Newsday Inc., 1999)

A Flushing resident who says dual-side air bags exploded simultaneously Thursday when he turned the key in his minivan's ignition, forcing him from the vehicle and causing injuries, is planning to sue the carmaker.

Mohinder Singh, 21, said Friday he will file a $5-million lawsuit in State Supreme Court on Monday against DaimlerChrysler Corp., alleging negligent manufacture of his 1996 Dodge Caravan and product liability.

"It's obscene to think that something that's supposed to protect you does harm," said Mason-Blake Pimsler, Singh's attorney. "Air bags are to be deployed only in a total impact, never when you turn a car on."

According to Singh, the minivan was parked in front of a courier business at 125 E. 23rd St. in Manhattan, where he works. "I got into the car, turned the ignition to heat up the car, and both air bags exploded," he said in a telephone interview.

The explosion knocked him through the driver's-side door, Singh said, and he became unconscious for a few minutes. Emergency Medical Service technicians were called and he was given an ice pack, he said, but he told them he wished to see a private doctor.

Singh, who went to the doctor Friday, said he suffered injuries to his neck, head, back and right wrist.

"I cannot even sleep at night," he said. "I hurt now. My fingers are tingling." He said "the whole dashboard exploded" and pieces of plastic hit him.

"I'm so scared to drive my car," Singh said.

DaimlerChrysler was closed Friday in observance of Passover and Good Friday; no one there could be reached for comment.

Singh said he has had the vehicle regularly serviced by Dodge dealers, most recently about three months ago. The bags never deployed before, he said.

The National Highway Traffic Safety Administration has been investigating more than 800,000 Dodge Caravans from model years 1994 and 1995. There were 28 consumer complaints, most involving driver air bags that blew open just after the driver turned the ignition key.

The status of the investigation could not be determined Friday.

Newsday Photo / Ken Sawchuk - Mohinder Singh, left, and his attorney, Mason-Blake Pimsler, with one of the Dodge Caravan air bags that Singh says exploded Thursday as he turned the key in the minivan's ignition. Singh, who says he was injured, is planning to sue the carmaker.

Display as: Full Article

Return to Headlines

Format For Printing

Copyright © 1999 Dow Jones & Company, Inc. All Rights Reserved.

NEWSPAPER

Automotive News®

DECEMBER 12, 1994 Entire contents © 1994 Crain Communications, Inc. Use of editorial content without permission is strictly prohibited. All rights reserved. $80/YEAR; $2/COPY

late news

Japan importer reports loss

TOKYO — Yanase & Co. Ltd., Japan's largest auto importer, reported that it has lost money for the second straight year as it goes through a painful restructuring.

Yanase, which imports and distributes vehicles from Mercedes, GM North America and Opel, said it had a net loss of 6.27 billion yen, or $63 million, in the fiscal year through September. Revenue dropped 9.7 percent from a year earlier to $3.8 billion.

The importer slipped into the red for the first time in 61

see LATE NEWS, 2

Chrysler races minivan fixes

Crash-test woes stall prototypes

JOSEPH BOHN
Truck Editor

Chrysler Corp. is racing to put together a production-viable prototype of its new 1996-model minivans, after crash tests in mid-October and in early November showed the new minivans did not meet Federal Motor Vehicle Safety Standard 208.

FMVSS 208, a major standard, requires that an unbelted test dummy withstand a 30 mph front impact without serious injury.

Any substantial production delays could prove costly as Chrysler prepares its 1996 minivans to compete with the Ford Windstar in defense of Chrysler's minivan sales crown.

KPG PHOTOGRAPHY

This computer-enhanced shot of a body shell gives a good indication of the overall styling of Chrysler's 1996 minivan.

With only nine weeks til the planned Feb. 13 production launch at St. Louis, Chrysler is on a tight schedule to comply with the standard using new componentry. In late November, the company moved back Job 1 dates by 1½ months at its two other minivan plants.

Since Nov. 4 Chrysler has put together engineering prototypes that passed FMVSS 208 in three crash tests. Another test was slated for Chrysler's Chelsea, Mich., proving grounds last Friday. But the modified vehicles require new componentry, some of which must be tested and tooled.

Chris Theodore, general manager of Minivan Platform Engineering, says development of the new minivan, code-named NS, is running ahead of some of Chrysler's previous new-model programs. But a hot topic among minivan engineers at a Dec. 6 Minivan Platform meeting was whether engineers will need to work Christmas Day.

Theodore says he doubts the engineers will work Christmas Day. But he says he has told his engineering team not to plan any extended vacations over the holidays for the next year.

12 AREAS EFFECTED

According to an internal status report, as of Dec. 1, Chrysler engineers recommended changes to design and components in 12 major frontal areas of the NS to enable it to pass FMVSS 208.

But Theodore says, "Everything we are doing is known and timed out and will be verified before production."

He won't say if the production

see MINIVAN, 33

Ford cuts Mark VIII price tag in Calif.

$4,475 jump start may go national

MARY CONNELLY

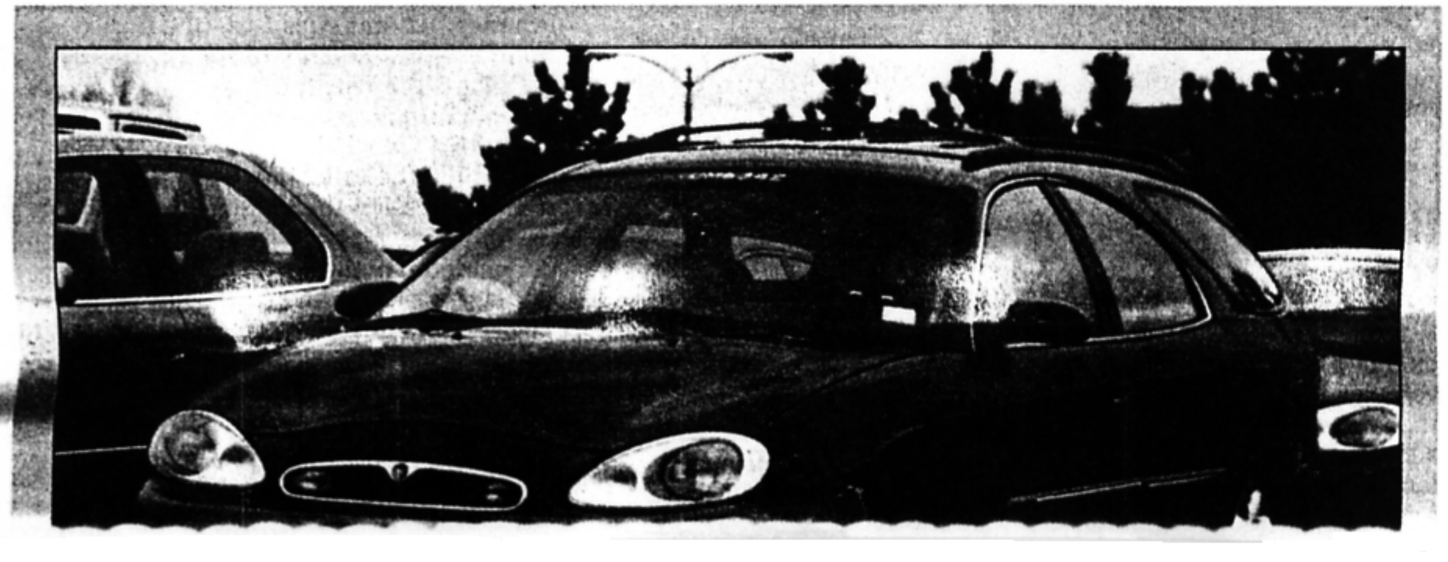

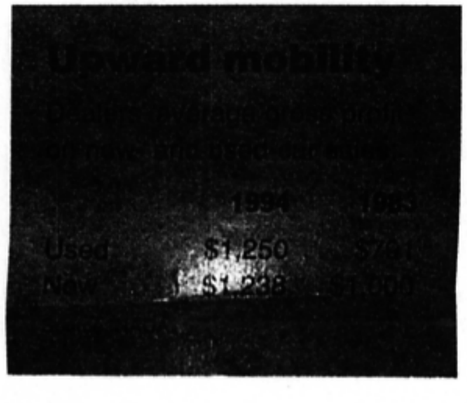

Dealers reap more profits

ers sell roughly 1.2 million program vehicles annually.

According to NADA, the rise in used-vehicle profits results from dealers retailing more late-model used cars and selling at wholesale more older, less-profitable vehicles. A Midwest dealer said his average gross profit in November on low-mileage, used vehicles was $1,418, compared to $987 in gross profit for the same models new.

The $400 difference is due to the growing consumer demand for used cars because the supply of late-model used cars is coming. Two- and three-year leases are more than a million vehicles will expire this year; up to 700,000 of these vehicles will be available for dealers to sell. AN

MINIVAN

Testing woes delay Chrysler

continued from PAGE 1

startup at St. Louis will be set back for a second time. St. Louis had originally been slated to start regular dealer production in January, but earlier this year the date was moved back to Feb. 13.

"We don't confirm dates," says Theodore. But according to Chrysler's internal report, the company will delay startup of NS production at Windsor until next July and at the Graz, Austria, plant until September in order to give the St. Louis launch team more time to get the NS rolling.

TESTING HISTORY

Chrysler has done 17 prototype crash tests for various federal safety standards, according to an internal report. But in a crucial eight-month period between January and mid October this year, it did not do any NS prototype crash testing for FMVSS 208. The failure of its two planned production prototypes caught engineers by surprise and set off the scramble to make the minivans comply.

The company first crash-tested two very early versions of the NS last December and January, but they were not intended as production models. Both passed FMVSS 208 requirements. In a Jan. 21, 1994 test of an NS equipped with a 2.4-liter four-cylinder engine and three-speed automatic transmission, the test dummy hit the airbag with a force of 41 G's, well within the government's limit of 60 G's and Chrysler's standard of 48 G's for impact deceleration without injury.

But, on Oct. 14, in its first crash test of a production-planned prototype — four months before Job 1 — the test dummy hit the steering wheel with a force of 69 G's, enough to crush its chest.

To double-check, Chrysler ran another crash test at Chelsea Nov. 4. This time, the dummy fared even worse, smashing the wheel with a force of 75 G's, according to an internal report.

Since then, the company has sharply stepped up its FMVSS 208 testing. It conducted three crashes from prototypes put together by its engineers that passed FMVSS 208. A fourth was planned last Friday.

Chrysler has made considerable progress in the last four weeks.

In tests Nov. 21 and Nov. 29, for example, dummies in the modified NS models crashed into a wall at Chelsea with a force of 44.6 G's and 47.8 G's, respectively.

Even so, Chrysler's crash testing for FMVSS 208 so far has been limited to long wheelbase models, equipped with a V-6 engine and four-speed automatic transmission. It still has to prove the crashworthiness of short-wheelbase NS models, equipped with the four-cylinder and three-speed automatic and models equipped with Mitsubishi's 3.0-liter in meeting FMVSS 208.

The long-wheelbase models are slated to be built first. They present the biggest problem because they are the heaviest. Having the flexibility to build a variety of short- and long-wheelbase models at all plants is a key part of the NS production strategy.

SAFETY CHANGES

Engineers have recommended changes to the front body, chassis, engine mounts, steering column, wheels, front seats and front bumper of the NS models to bring them into compliance with FMVSS 208. Some of the component changes require new tooling.

In Chrysler's production prototype crash tests, the steering column tilted up, causing the test dummy to slide under the airbag, hit the steering wheel and break its chest. The company has re-engineered the tilt mechanism in the steering column to restrict its movement. It also changed the front seat tracks and is switching to a more secure, dual-tethered airbag for better deployment.

Originally, Chrysler planned a less expensive, untethered "E-fold" airbag that could be folded up by a machine. But now, supplier Morton International Inc.'s Automotive Safety Products Group in Ogden, Utah, will have to hand fold the dual-tethered bags before shipping them.

Chrysler also is adding double knee blockers, with a higher gauge strength, after tests showed the original knee blockers crumbling and the dummy's knees sliding underneath them.

Chrysler also will use a higher gauge steel in front bumpers than originally planned and cut holes in front bumper rails to reducing bending stiffness. It is adding multiple holes and slots to its lower radiator crossmember and longitudinal rails, and bevelling the left rail tip to provide more crush clearance for the transmission end cover.

Engineers are moving the driver closer to the restraint system and putting the driver in a more upright posture by inclining front seats to a full upright position. They also eliminated some down travel from the power seat adjusters. There are new engine mounts and other planned changes.

Chrysler will delay Job 1 for regular dealer output at Windsor by seven weeks to July 5, 1995, allowing its launch support team to get St. Louis up to full line speed, according to a memo. AN

Minivan production plans as of Dec. 1

Start date for	St. Louis	Windsor	Austria
LWB prevolume production	Jan. 30	—	—
LWB dealer production	Feb. 13	—	—
SWB prevolume production	March 1	—	—
SWB dealer production	March 27	—	—
SWB/LWB dealer production	—	July 5	
SWB/LWB dealer production	—	—	Sept. 25

Notes: LWB=long wheelbase models; SWB=short wheelbase models.
Source: Chrysler Minivan Status Review report

Minivan crown vulnerable

Changeovers and production delays in Chrysler Corp.'s new 1996 model minivans could well cost it minivan sales leadership next year.

Chrysler will headily take the minivan sales crown this year, as it has ever since it pioneered the segment in 1983. Production began Nov. 1, 1983.

In 11 months of calendar 1994, Chrysler retailed 488,378 minivans in the United States, giving it a 149,903 lead over Ford Motor Co.'s combined minivan sales.

But, recently, Ford Motor has closed the gap. The automaker offers the Aerostar, Windstar and Mercury Villager.

Chrysler Corp.'s models include the Chrysler Town & Country; Dodge Caravan, Caravan C/V and Grand Caravan; and Plymouth Voyager and Grand Voyager.

In November, combined Ford Motor Co. minivan sales totaled 30,207 units, within 3,169 units of Chrysler's 33,376.

Before the most recent delays, Thomas Pappert, Chrysler vice president of sales and marketing, already estimated Chrysler would lose about 60,000 minivan sales due to changeover. The delay at Windsor could cut an additional 4,741 units from Chrysler's total.

It now seems like model changeover downtime will cost Chrysler close to 65,000 minivans next year, an average of more than 5,000 a month, which puts Chrysler's minivan sales crown within striking range of Ford.

— Joseph Bohn

Extra '95 minivans boost bottom line

Chrysler needs to bring the 1996 minivans to market to compete with the Ford Windstar, but the automaker is trying to build carryover inventory.

On Dec. 1, there was a 93-day supply.

Although Chrysler will lose more production, internal calculations show that Chrysler will earn an extra $5.5 million profit from the changes.

The company expects to earn $6,200 to $6,600 a unit from extra 1995 models built in Ontario during the first and second quarters and $5,500 to $5,800 per unit from 1996 models produced there in the second half.

— Joseph Bohn

TAB

24

NBC NEWS
30 Rockefeller Ctr. NY, NY 10112

Number 425

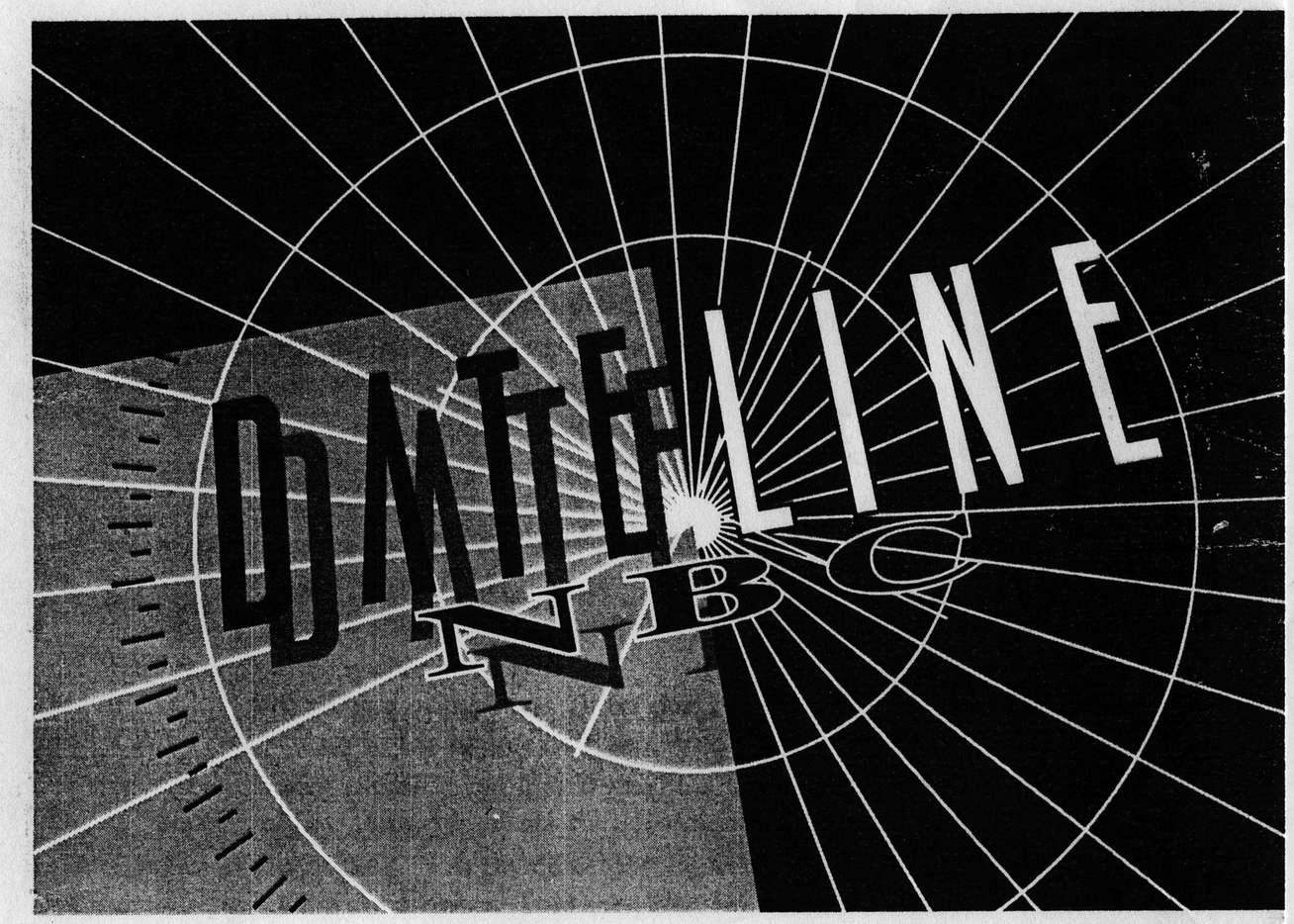

November 19, 1996

©1996 National Broadcasting Company, Inc.
ALL RIGHTS RESERVED
We hereby grant nonexclusive permission to publish and reprint up to 250 words
of this transcript for the purposes of reference, discussion or review.

Transcript produced by *BURRELLE'S INFORMATION SERVICES*
Box 7 • Livingston, New Jersey 07039

DATELINE
NBC
BURRELLE'S TRANSCRIPTS
Box 7 • Livingston, NJ 07039

PAULEY: *(Voiceover)* Plus, art in a can, DATELINE's Picture of the Week.
(Picture of the Week graphic)
Announcer: DATELINE, with Jane Pauley and Stone Phillips, plus Tom Brokaw, Katie Couric, Bryant Gumbel, and Maria Shriver. DATELINE continues after this brief message.

CRASH TEST

Announcer: From Studio 3B in Rockefeller Center, here is Jane Pauley.
JANE PAULEY: Good evening. They've all but replaced the old station wagon. Soccer moms and dads all across the country drive them. In fact, roughly one out of every 10 cars sold in America is a minivan. They're the new family car. But have you ever wondered how well a minivan will protect you and your family if you're in a serious accident. Well, it's a good question. And the answer may depend on what make and model you're in. Tonight, see for yourself as chief consumer correspondent Lea Thompson brings you this DATELINE Exclusive.
Mr. BRIAN O'NEILL: *(Voiceover)* What these tests show is that in some of these minivans the chance of an injury are high.
(Crash test)
LEA THOMPSON reporting: *(Voiceover)* DATELINE cameras are behind the scenes at one of the most modern automobile crash test centers in the world.
(Researchers)
Unidentified Man #1: *(Trying to remove dummy from crashed vehicle)* It's not even budging.
THOMPSON: *(Voiceover)* Researchers here at the Insurance Institute for Highway Safety are trying to understand why one family minivan can look like this, while another looks like this, all in the same test.
(Researchers; crash tests)
Mr. O'NEILL: *(Show dummy in crashed minivan)* There's just no room left back down here. I believe that that foot is separated from the leg.
THOMPSON: *(Voiceover)* The commercials say they're the perfect family car for the '90s, millions on the road, many driven by mothers with their kids. So, how well would a minivan protect you in a serious crash at 40 miles an hour?
(Minivan commercial; highway)
Unidentified Man #2: *(With minivan)* Other way.
THOMPSON: *(Voiceover)* The Institute is about to find out.
(Institute)
Man #2: *(Setting up crash test)* Boy, that's right on the money.
THOMPSON: *(Voiceover)* It's funded by insurance companies and says its goal is to cut the cost of insurance claims by making cars safer. It will be testing some of the most popular minivans in America: the Dodge Grand Caravan, the Ford Aerostar, the newly designed van from General Motors—the Pontiac Trans Sport, nine minivans in all. Every one of these vans meets federal regulations. The question is, can they pass a test the government doesn't do? Two years ago the Institute began what it calls a revolutionary new series of crash tests, very different from the government's. The government tests cars by running them head-on into a flat wall, the force spread evenly across the front. But in any junkyard you'll see many accidents don't happen that way. So the Institute tests cars by hitting a wall off center—'off set' it's called—concentrating the forces on just one side. The test is carefully designed to simulate what happens if two cars hit like this, driver to driver at 40 miles an hour.
(Institute; minivans; crash test set up; crash test; simulated crash; junkyard; simulated crash test; video of crash)
Mr. O'NEILL: We've chosen the speed that is representative of serious, real world crashes.
THOMPSON: *(Voiceover)* And the institute's Brian O'Neill says some cars do well in the new test.
(Movie camera)
Mr. O'NEILL: *(Showing video of test)* This is the Ford Windstar. This is by far the best performer.
THOMPSON: *(Voiceover)* There's plenty of damage, but O'Neill says it's distributed around the driver, not into him. The safety cage holds. Any injuries at all to the dummy?
(Crash test)
Mr. O'NEILL: The injury measures on this dummy were all low, indicating that there was no significant risk of injury to any body region.
THOMPSON: *(Voiceover)* The Ford Windstar survives this crash. No serious injuries, not even to the legs. But how well will the other minivans hold up?
(Damaged Windstar; crash test set up)
Unidentified Woman #1: *(Writing figures)* Torso angle?
THOMPSON: *(Voiceover)* The Institute bought these brand new minivans right off dealer's lots. Each one will be tested at the same speed, same angle, same conditions. DATELINE had no say in how the cars were chosen, tested, or evaluated.

(Institute; "Test in Progress" sign)
Unidentified Man #3: *(Voiceover)* The car is good.
(Institute)
Unidentified Man #4: *(Crash test)* Three, two, one.
THOMPSON: *(Voiceover)* This is the Dodge Grand Caravan, the top selling minivan in America, at 40 miles an hour.
(Crash test)
Mr. O'NEILL: *(Inspecting damaged minivan)* There is major intrusion. This means that the chances of major leg and foot injuries in this crash are very, very high.
THOMPSON: *(Voiceover)* The Institute says that part of the floor near the pedals is rammed back more than a foot, and the news from sensors in the dummy is not good.
(Minivan after crash test)
Mr. O'NEILL: *(Inspecting damaged minivan)* Both legs?
Woman #1: *(Inspecting minivan)* Mm-hmm. Both left and right.
THOMPSON: *(Voiceover)* Watch the front tire. The Institute says the structure of the van causes the crash forces to be focused on the feet.
(Crash test)
Mr. O'NEILL: *(Voiceover)* As a result, both of the lower legs of the dummy indicated the risk of a serious injury.
(Crash test)
THOMPSON: Would both legs have been broken?
Mr. O'NEILL: We think that in this crash both legs would have been broken. That's correct.
THOMPSON: *(Voiceover)* Remember, the Ford Windstar protected the dummy's legs. In the same test, the Dodge Caravan didn't. This is the Chevrolet Astro, also called the GMC Safari.
(Dummy being removed; crash test)
Mr. O'NEILL: *(Showing damaged minivan)* It's jammed in there.
THOMPSON: *(Voiceover)* The floor has buckled, tipping the driver's seat forward.
(Damaged minivan)
Mr. O'NEILL: *(Showing damaged minivan)* This vehicle has almost got its back broken, if you know what I mean. It's come up and buckled.
THOMPSON: *(Voiceover)* In slow motion you can see how the air bag still manages to cushion the head. But at the feet the floor is rammed back as much as 15 inches, the door jammed so tight it has to be cut open. The Institute says one leg is probably broken. But remember, this dummy is the size of an average man.
(Crash test; door being cut; damaged minivan)

THOMPSON: What would have happened if this had been a woman, short and lighter?
Mr. O'NEILL: The shorter woman would presumably have the seat further forward, so there would be even less space. As the seat's pitching forward the steering wheel is coming back and up. This is a problem when we're losing s—what we call the survival space.
THOMPSON: *(Voiceover)* This is the Aerostar, an older design from Ford. Remember, the minivans are being tested at 40 miles an hour.
(Crash test)
Mr. O'NEILL: *(Inspecting damaged minivan)* This is extremely unusual because the steering wheel is in the lap of the driver.
THOMPSON: *(Voiceover)* The steering wheel has snapped off. In slow motion you can see it happen.
(Damaged minivan; crash test)
Mr. O'NEILL: *(Voiceover)* The steering column going upwards as the driver's face is going forward into the air bag. It bottoms at the air bag and actually breaks the steering wheel off the column.
(Crash test)
THOMPSON: *(Voiceover)* But amazingly, O'Neill says, the air bag still manages to catch the head and cushion the blow just enough.
(Crash test)
Mr. O'NEILL: *(Voiceover)* The forces on the drivers head were too high, but they were not high enough to produce a very serious injury.
(Crash test)
THOMPSON: This says a lot about air bags, doesn't it?
Mr. O'NEILL: Absolutely, because this is what air bags are all about.
THOMPSON: *(Voiceover)* Again, the door has to be pried open. Measurements show the floor has been rammed back as much as 15 inches. The computer says the left leg is probably broken.
(Damaged minivan)
THOMPSON: *(Voiceover)* The Institute says this minivan faired even worse, the Toyota Previa.
(Crash test)
Mr. O'NEILL: *(Inspecting minivan)* This is the worst we've seen, I think. This is just looking terrible. I mean, this steering column is almost up in the roof.
THOMPSON: *(Voiceover)* And the seatbelt has allowed the dummy to slip down, the legs wedged against the dash board. One is probably broken. And just watch what happens to the dummy's head.
(Damaged minivan; crash test)
Mr. O'NEILL: *(Voiceover)* The driver dummy in this crash...*(unintelligible due to audio difficulties)*...the head and the neck.

Troubling forces. It's hard to predict precisely what kind of injury that would produce, but there would be head and neck injury in this crash.
(Crash test)
THOMPSON: *(Voiceover)* Ironically, the man in charge of these tests owns a minivan like this one. Now he's selling it.
(Damaged minivan)
Mr. O'NEILL: When I saw the results of this test, I decided this is not a vehicle for my family.
THOMPSON: *(Voiceover)* Remember, there was a minivan that did well in this test. The Ford Windstar protected every part of the body. In the Toyota Previa, the institute says there's a chance the head, neck, and legs all were injured. But the Institute says, even worse than the Previa is this brand new design from General Motors, the Pontiac Trans Sport.
(Crash test; damaged minivan; crash test)
Mr. O'NEILL: *(Inspecting damaged minivan)* Looks like massive amounts of intrusion. We've got the chin of the dummy on the steering wheel, which isn't good.
THOMPSON: *(Voiceover)* The wheel is under the chin.
(Damaged minivan and dummy)
Woman #1: *(Examining film)* See the steering wheel rim here?
THOMPSON: *(Voiceover)* The slow-motion film shows the dummy's head snapping back.
(Film of crash test)
Woman #1: *(Voiceover)* The structure of the vehicle just collapses. It's obvious from his head motion that it's hit the steering wheel.
(Film of crash test)
THOMPSON: *(Voiceover)* General Motors says this is one of the few vans in which the seam welds, which hold sections of the car together, didn't separate. But the Institute says the floor has been rammed back as much as 19 inches. That's more than any other van. The dummy's left leg is trapped.
(Damaged minivan)
Unidentified Man #5: *(Pulling on dummy)* It's not even budging.
THOMPSON: *(Voiceover)* It won't come free even with a crowbar.
(Dummy stuck in minivan)
Man #5: *(Trying to remove dummy)* It's not moving, is it?
THOMPSON: *(Voiceover)* Technicians finally take the dummy apart at the knee just to get it out. But there's a problem. One of the speed readings for this test is too high.
(Dismantled dummy; researchers)
Unidentified Man #6: I got 41.4.

THOMPSON: *(Voiceover)* It's only a mile and a half over test speed at the most, but the damage is so severe the institute decides it must do the test again. This is another Trans Sport. This time, the speed readings are perfect, but the damage is similar.
(Speedometer; damaged minivan; crash test; damaged minivan)
Mr. O'NEILL: *(Inspecting minivan)* Massive structural collapse.
THOMPSON: *(Voiceover)* The dummy's left leg is trapped again.
(Damaged minivan)
Mr. O'NEILL: *(Inspecting minivan)* Well, this is really bad because the ankle is actually detached from the foot. I believe that's completely snapped off. So the loads on the dummy have been such that the metal leg—this is not a bone leg—this metal leg is snapped off.
THOMPSON: *(Voiceover)* And on the slow-motion film, watch carefully...
(Crash test)
Mr. O'NEILL: *(Voiceover)* What this crash illustrates is that when the compartment fails completely, as it's done here, and is collapsing all around you, the restraint systems can't offer much protection.
(Crash test)
THOMPSON: *(Voiceover)* O'Neill says the head snaps back. The survival space collapses so much that the steering wheel is driven right through the air bag into the dummy. This time, the injury readings are even more serious.
(Crash test)
Mr. O'NEILL: A major injury to the neck, to the cervical region.
THOMPSON: Is it possible that the person in this crash might have been killed?
Mr. O'NEILL: Well, we can never say for certain just based on dummy measurements, but the forces were certainly high enough that the injuries could have produced a fatal injury.
THOMPSON: *(Voiceover)* General Motors declined to talk about this test on camera, but in a letter GM said, `To assure overall safety at a variety of speeds, it ran 72 crash tests on its minivan, including an offset test at 35 miles-an-hour.' GM wrote, "The minivan performed very well," but declined DATELINE's request to release pictures of the test or the specific results. GM and the other automakers reminded us that all their vans meet or exceed federal safety standards, and they include safety features to help avoid accidents. The car companies have also criticized the Insurance Institute saying it has a `vested interest' and cares more about cutting insurance claims than the added cost of building safer cars, that it puts too much emphasis on this one crash

test. But most of all, the automakers said, the Institute's test was too fast.

(Crash test; letter; damaged minivans)

Mr. GEORGE PARKER: I would have to classify it an ultra high-speed test, compared to the types of crashes that happen in the real world.

THOMPSON: *(Voiceover)* George Parker represents the International Association of Automobile Manufacturers.

(Mr. Parker being interviewed)

THOMPSON: Are you saying that people don't have accidents at 40 miles an hour?

Mr. PARKER: They are very rare instances of crashes at that speed. You're probably talking less than 5 percent, maybe even less than 2 percent of all of crashes—offset crashes happen at that speed.

THOMPSON: *(Voiceover)* General Motors says it's even more rare, only about four hundredths of one percent of all the accidents the federal government tracks, and that designing cars to withstand high-speed crashes could actually contribute to injuries in more frequent, low-speed accidents. The institute says it picked the 40-mile-an-hour speed because, among fatal front end accidents, that speed is common. About half of deaths happen faster and half slower than 40.

(Letter; crash tests)

THOMPSON: *(Voiceover)* Tomorrow, the Insurance Institute releases its official rankings. The Ford Windstar, with no injuries, gets a "Good." But after that, a sharp drop. Four vans rated "Marginal": the Mazda MPV, Dodge Grand Caravan, Honda Odyssey, Nissan Quest. And these rated poor: the Chevrolet Astro, Ford Aerostar, Toyota Previa. And last on the list, the Pontiac Trans Sport. It's also called the Oldsmobile Silhouette and the Chevrolet Venture.

(Insurance Institute; text of ratings)

THOMPSON: If the Ford Windstar can protect passengers adequately at 40 miles an hour, then why can't all these other minivans do as well?

Mr. PARKER: Well, I think that's not the point. I think the point is that if you are a potential purchaser or owner of one of these vehicles, that I would be very cautious about putting a lot of importance to the results of this test, because these vehicles do well in the real world.

THOMPSON: *(Voiceover)* Brian O'Neill agrees that compared to some other cars, minivans do not have as many deaths and injuries. But he says, it's not because of the way they're built, it's because the people who drive minivans are middle-aged moms and dads—statistically some of the safest drivers on the road.

(Thompson and Mr. O'Neill at Insurance Institute; minivan on road)

Mr. O'NEILL: Minivans have a good on the road record because of their drivers.

(Voiceover) What we're saying, however, is, if you're driving one of these and you're unfortunate enough to be in a collision, some of them aren't going to offer the protection they should be offering.

(Crash test)

PAULEY: The automakers say the Insurance Institute runs its tests to get publicity, and they note the tests are not used to set the car insurance rates you pay. But in spite of the criticism, the federal government wants to develop its own offset test, similar to the one you've just seen.

(Voiceover) If you're interested in detailed van-by-van test results, they're available on DATELINE's Web site at www.dateline.msnbc.com.

(Web site graphic)

PAULEY: We'll be right back.

Announcer: This is DATELINE Tuesday, for November 19th, with reports tonight from chief consumer correspondent Lea Thompson and Chris Hansen.

Still ahead, could the ValuJet crash have been prevented by a device similar to one you have right in your home?

(Announcements)

Announcer: From our studios in New York, here is Stone Phillips.

STONE PHILLIPS: The miracle and the mystery of test-tube babies.

DAVID BRINKLEY reporting: *(From old broadcast)* Good evening. The first baby ever conceived outside the mother's body was born in England.

PHILLIPS: *(Voiceover)* Louise Brown was the world's first test-tube baby. With her was born a brave new world of science and law. On occasion, in vitro fertilization has resulted in bizarre crimes.

(Video of Louise Brown being cleaned off after birth; lab workers pouring substance into petri dish)

Unidentified Woman #2: I just want to know why he did it!

PHILLIPS: *(Voiceover)* Like a doctor who secretly used his own sperm to fertilize his patients.

(Man leaving building)

Mr. WILLEM STUART: Cornflakes.

Ms. WILMA STUART: Yeah, cornflakes.

Unidentified Boy: Yeah.

NS-BODY
SAFETY LEADERSHIP TEAM (SLT)

GENERAL INTRODUCTION

AND

ACTIVITIES/ISSUES REVIEW

Product Direction Team
February 23, 1994

Minivan Operations, February 14, 1994
PVS#10\sltpdt.cvr

NS-BODY
SAFETY LEADERSHIP TEAM (SLT)

"A" PRIORITY

SAFETY FEATURE INVESTIGATION ITEMS

Accident Avoidance

- Proximity Detection/Enhancement :
  - Side Object
  - Rear Object
- Traction Control
  - Low Speed
  - Full Speed
- Front O/S Lighting Enhancement:
  - Wipers On/Headlights On
  - Illuminated Entry/Keyhole
  - Remote and Delay Light-your-way
- Rear O/S Lighting Enhancement:
  - Bright B/U Lights
  - Fast Response CHMSL/Brake Lights

Accident Survivability

- Rear Seat Headrests
- Center Rear Headrests
- Child Safety Seat:
  - Split Recline
- Off-set Impact Protection
- Side Air Bags
- Seat Belt Pre-tensioners
- Automatic Power Door Lock Release
- Fuel Shut-Off Switch

Other

- Enhanced Celular Communications
  - Telephone*
- Remote Keyless Entry
  - Locator/Panic Alert
- 5 MPH Bumper
  - Front
  - Rear

Timing	Financials: Piece Cost	Financials: Investment	Volume	Weight

Information

to be

submitted/consensed

by

Minivan

Platform

Team

Submittal timing

to be

discussed

at

PDT

*Dealer installed at present.

TAB

25

NHTSA DEFECT INVESTIGATION PROCEDURES ? : 1994/5 VS. 1999
BLATANT DUPLICITY OR LESSONS LEARNED ?

ABC News 20/20 : "Open To Danger" (October 27, 1995 - Please see Tab 8)

On October 27, 1994 an initial secret meeting was held between NHTSA and members of the Chrysler legal and management staffs. Representatives of the NHTSA Chief Counsel's office and the Office of Defects Investigation (ODI) were present. At this meeting NHTSA decided to grant Chrysler :

"an opportunity to review the material developed in the course of NHTSA's (EA94-005) investigation before the agency completes this Engineering Analysis".

This "review" occurred on November 17, 1994; in stark contrast to long-established agency practice (Tab 3).

As detailed in my October 27, 1999 letter to U.S. Attorney General Janet Reno; Chrysler, NHTSA and the **Department of Justice** then conspired to obscure the November 17, 1994 conclusion of EA94-005 :

"The latch failure is a safety defect that involves children."

Due to this conspiracy, it took a lawsuit and one year before the U.S. taxpayer would be allowed to view the EA94-005 materials and crash test videos. It was not until October 25, 1995 that NHTSA Administrator Martinez would hold a news conference, wherein lose of the lawsuit was ostensibly/officially announced, and the crash test videos were released to the media. Thee prominent example of the media coverage was the October 27, 1995 airing of *ABC News 20/20* (Tabs 1 & 2).

ABC News 20/20 : "After the Crash : Parts I & II" (July 16, 1999)

Detailed here in Tab 25 is the current NHTSA EA99-013 defect investigation regarding Chrysler minivans. This fire-hazard defect involves at least two safety standards : FMVSS-214 and FMVSS-301. NHTSA had conducted compliance testing for the 1996 to 1999 Chrysler minivans during January and February 1999. In all tests, these Chrysler minivans consistently failed the fuel system integrity tests.

The EA99-013 is still "open". The EA99-013 crash testing of the Chrysler minivans was video taped.

However, in stark contrast to the treatment that injury/death victims endured during the EA94-005 latch defect conspiracy of 1994/5; the EA99-013 crash test videos were made available to the media in July 1999 while EA99-013 was still "open". When asked by *ABC News 20/20* reporter Arnold Diaz to comment on the 1996 - 1999 Chrysler minivan fuel system defects, NHTSA Administrator Martinez proclaimed :

"Because they're under investigation I can't say anything about it."

While death/injury were **known** to be occurring during the Chrysler/NHTSA/DOJ EA94-005 conspiracy, NHTSA hid the crash test videos from the public. But five years late; during an investigation involving the very same car company, involving the very same types of vehicles; NHTSA releases the EA99-013 videos to the very same media (*ABC News 20/20*) **while confirming that it is still "open" !** This begs the question "BLATANT DUPLICITY OR LESSONS LEARNED ? "

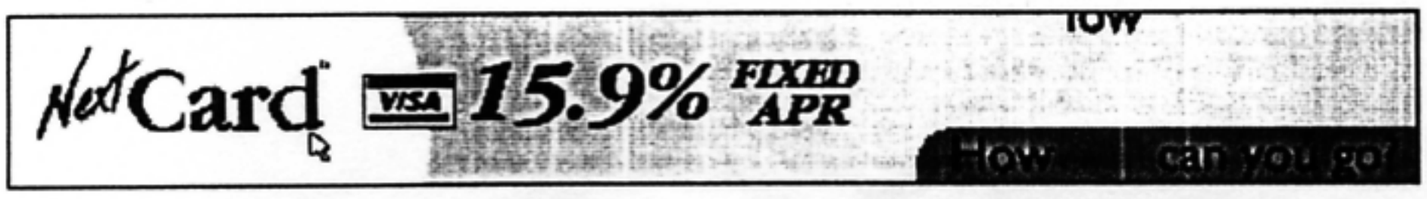

ADVERTISING
Cars.com
Classifieds
Personals
JobHunter
Homes/Apts.
Place an ad

| ►Share this story with a friend | ► Join the Autos discussion in Feedback |

Essentials
Search
Highlights
CyberSurveys
►News Talk
►Sports Talk
►Wings Talk
►Gear Talk
Horoscope
Lottery
Weather
Staff

News
Autos
►Joyrides
Business
Careers
Classrooms
Editorials
Metro/State
►Macomb
►Oakland
►Wayne
►On Detroit
Nation/World
Obituaries
►Death Notices
Technology
Voices

Sports
Sports Front
►Lions
►Pistons
►Shock
►Tigers
►Red Wings
College Sports
►U-M
►MSU
►State Colleges
High Schools
Motor Sports
Golf
Scoreboards

Features
Features Front
Entertainment
►Casino Guide
►Movie Finder
►TV Listings
Comics
Comic Books
Detroit History
Food
Games
Health
Homestyle
Next!
Pets
Religion
Wine Report

Advertising
Cars.com
Classifieds
Personals

Gas tank probe grows

U.S. intensifies GM truck, Chrysler van investigation

Company officials dispute negative federal crash tests results with Chrysler minivans, such as the Plymouth Voyager, that show a fire hazard.

By Dina ElBoghdady / Detroit News Washington Bureau

WASHINGTON -- The National Highway Traffic Safety Administration upgraded its investigation into gasoline tanks on some DaimlerChrysler AG minivans and General Motors Corp. pickups that the agency suspects may pose a fire hazard during side-impact crashes.

The probe focuses on fuel tanks of roughly 2 million DaimlerChrysler minivans from model years 1996-1999 and about 1.3 million GM S-10 and Sonoma compact pickups from model years 1994-1999.

In both cases, leakage occurred during federal crash tests in which minivans and pickups were struck by other vehicles traveling 30 miles per hour or 34 miles per hour.

The investigation was upgraded from a preliminary evaluation to an engineering analysis -- which could lead to recall if sufficient evidence is found to warrant that action, The Detroit News learned.

Both automakers said they are cooperating with the investigation. But they add that the crash test results are at odds with their own testing and don't reflect real-world experience with these vehicles.

"We have millions of these vehicles out there and we have never seen this happen -- ever," said Sue Cischke, DaimlerChrysler's vice-president of vehicle safety.

Federal documents show a three-door 1999 Dodge Caravan spilled about 11 gallons of test fuel when a hose in which gasoline travels from the retail pump into the tank pulled loose at the bottom of the tank during a January crash test. A test in December using the four-

JobHunter
Homes/Apts.
Place an ad
Home delivery

door 1999 Dodge Grand Caravan also produced fuel tank leaks.

The probe was extended to the Plymouth Voyager and Grand Voyager and the Chrysler Town and Country in case they have similar tanks.

A 1999 Chevrolet S-10 extended-cab pickup truck with a four-cylinder engine spilled 15 gallons of test fuel during a crash test, prompting a look at GM's S-10 and the Sonoma pickups.

GM put a shield at the lower rear area of the fuel storage tank in its V-6 pickups at the end of model year 1998. The shields were not added to four-cylinder pickups until December, after the federal crash tests. Under investigation are models without the shield.

Copyright 1999, The Detroit News

633496

REPORT NO.: 214-MGA-99-05
SAFETY COMPLIANCE TESTING FOR FMVSS NO. 214
"SIDE IMPACT PROTECTION"

DaimlerChrysler Corporation
1999 Dodge Caravan 3 Door
NHTSA NO: CX0305

MGA PROVING GROUNDS
5000 WARREN ROAD
BURLINGTON, WI 53105

Test Date: January 5, 1999

Report Date: January 8, 1999

FINAL REPORT

Prepared For:

U.S. DEPARTMENT OF TRANSPORTATION
NATIONAL HIGHWAY TRAFFIC SAFETY ADMINISTRATION
ENFORCEMENT
OFFICE OF VEHICLE SAFETY COMPLIANCE
400 SEVENTH STREET, SW
ROOM 6115 (NSA-30)
WASHINGTON, D.C. 20590

TECHNICAL REPORT STANDARD TITLE PAGE

1. Report No. 214-MGA-98-05	2. Government Accession No.	3. Recipient's Catalog No.
4. Title and Subtitle Final Report of FMVSS No.214 Compliance Side Impact Protection Testing of a 1999 Dodge Caravan 3 Door NHTSA No. CX0305		5. Report Date January 8, 1999 6. Performing Organization Code MGA
7. Author(s) Dave Kosloske		8. Performing Organization Report No. MGA-DOT-214-05
9. Performing Organization Name and Address MGA Research Corporation 5000 Warren Road Burlington, WI 53105		10. Work Unit No. 11. Contract or Grant No. DTNH22-97-C-11033
12. Sponsoring Agency Name and Address U.S. Department of Transportation National Highway Traffic Safety Administration Office of Vehicle Safety Compliance 400 Seventh St., S.W., Room 6115 Washington, D.C. 20590		13. Type of Report and Period Covered Final Test Report January 5, 1999 - January 8, 1999 14. Sponsoring Agency Code NSA-30
15. Supplementary Notes		

16. Abstract

A 48/24 kph 90° Impact (Moving Deformable Barrier) Compliance Test was conducted on the subject 1999 Dodge Caravan 3 Door in accordance with the specifications of the Office of Vehicle Safety Compliance Test Procedure No. TP- 214D-04 for the determination of FMVSS No. 214 Side Impact Protection compliance. The test was conducted at MGA Research Corporation in Burlington, Wisconsin, on January 5, 1999.

The impact velocity of the Moving Deformable Barrier (MDB) was 52.6 kph, and the ambient temperature at the struck side of the target vehicle at the time of impact was 21.7°C. The target vehicle post test maximum crush was 369 mm between levels 1 and 2. The test vehicle's performance follows:

	DRIVER.	LEFT REAR PASS.
Left Upper Rib (LUR) Accel., g	36	32
Left Lower Rib (LLR) Accel., g	30	35
Lower Spine (T_{12}) Accel., g	49	51
Thoracic Trauma Index (TTI)	43	43
Pelvis (PEV) Accel., g	52	95

The door on the struck side of the vehicle did not separate from the body at the hinges or latch and the opposite doors did not open during the side impact event.

17. Key Words Compliance Testing Side Impact Protection FMVSS 214 Side Impact Dummy (SID)		18. Distribution Statement Copies of this report are available from: National Highway Traffic Safety Adm. Technical Ref. Division, Room 5108 (NAD-52) 400 Seventh Street, S.W. Washington, D.C. 20590 Telephone No. 202-366-4946	
19. Security Classif. (of this report) Unclassified	20. Security Classif. (of this page) Unclassified	21. No. of Pages 293	22. Price

Form DOT F 1700.7 (8-69)

DATA SHEET 16

FUEL SYSTEM INTEGRITY POST IMPACT TEST DATA

Vehicle Year/Make/Model/Body Style: 1999/Dodge/Caravan/3 Door

Vehicle NHTSA No.: CX0305 Test Date: January 5, 1999

TEST REQUIREMENTS:

Drain the test vehicle's fuel system and operate the engine until the fuel system is dry. Add Stoddard solvent, which has been dyed purple, until 92-94% of the stated usable capacity is reached. Operate the engine to assure the Stoddard solvent is present throughout the entire fuel system.

TEST VEHICLE IMPACT TYPE: X Left Side Impact MDB 32.7 mph (52.6 kph)

FUEL SPILLAGE MEASUREMENT:

POST IMPACT TEST	TEST RESULTS	MAXIMUM ALLOWABLE
1. From impact until vehicle motion ceases	unknown	1 oz
2. For 5 minute period after vehicle motion ceases	approx. 2 gal.	5 oz
3. For next 25 minutes	approx. 9 gal.	1 oz./1 min

FUEL SPILLAGE LOCATION(S): Stoddard solvent leaked from the fuel tank at the point where the fuel filler neck separated from the tank.

Note: Post-test static rollover was not conducted because it was obvious that the fuel system integrity had been compromised.

STATE OF MICHIGAN

IN THE CIRCUIT COURT FOR THE COUNTY OF OAKLAND

CHRYSLER CORPORATION, a Delaware corporation,

Plaintiff,

-vs-

No. 94-489177-CZ
Hon. David F. Breck

PAUL SHERIDAN,

Defendant./

The deposition of ROBERT A. LUTZ, taken pursuant to the Michigan General Court Rules before Rose Ann Zaidan, a Notary Public in and for the County of Oakland, acting in the County of Washtenaw, State of Michigan, at 2101 Hubbard Drive, Ann Arbor, on Friday, June 4, 1998, commencing at or about the hour of 9:20 o'clock A. M.

APPEARANCES:

KIENBAUM, OPPERWALL, HARDY & PELTON, P.L.C.,
BY THOMAS G. KIENBAUM, ESQ., (P15945),
and ROBERT B. BROWN, ESQ., (P51378),
325 South Old Woodward Avenue, Birmingham, MI 48009, 248-645-0000, appearing on behalf of the Plaintiff.

MAZUR, AMLIN, MORGAN, MEYERS & KITTEL,
BY COURTNEY E. MORGAN, JR., ESQ., (P29137),
and MICHAEL S. MAZUR, ESQ., (P29137),
1490 First National Building, Detroit, MI 48226, 313-961-0130, appearing on behalf of the Defendant.

ALSO PRESENT: Paul Sheridan

- - -

Rose Ann Zaidan, CSR-2217, RPR

R. A. ZAIDAN & ASSOCIATES, INC.
248-643-4740

Q. Are you familiar with a change in the type of inflator used in the front air bags in the NS minivans after their introduction, sir?

A. I think we're getting into good old last paragraph of the order here, are we not?

Q. I'm just asking you whether or not you're familiar with the change.

A. Well, I'm not going to answer.

Q. Okay. Are you familiar with any scrutiny by the NHTSA of those air bags currently ongoing?

A. I'm not going to answer.

Q. Okay. Are you familiar -- does Chrysler routinely certify compliance with 214 based on F1 tests?

A. I don't know what 214 is and I no longer am sufficiently aware of the definition of F1s and I'm not going to answer.

Q. 214 is a side impact standard. Does Chrysler routinely certify compliance with MVSS 301 based upon tests where the fuel tank is empty?

A. I'm not going to answer it.

Q. Does Chrysler routinely certify compliance with 301 based upon F1 testing?

A. Not going to answer.

Q. I want you to take a look at the bottom page of

TAB

26

STATE OF MICHIGAN
IN THE CIRCUIT COURT FOR THE COUNTY OF OAKLAND

Chrysler Corporation,

Plaintiff,

v

Case No. 94-489177-CZ
Hon. David F. Breck

Paul Sheridan,

Defendant.

_____/

Thomas G. Kienbaum (P15945)
325 South Old Woodward Ave
Birmingham MI 48009
Attorney for Plaintiff

Courtney E. Morgan, Jr. (P29137)
1490 First National Building
Detroit MI 48226
Attorney for Defendant

_____/

OPINION AND ORDER REGARDING DEFENDANT'S MOTION TO SET ASIDE RECOMMENDATIONS OF NORMAN L. LIPPITT

At a session of said Court held in the City of Pontiac, County of Oakland, State of Michigan, on

APR 0 8 1999

PRESENT: HON. DAVID F. BRECK
CIRCUIT COURT JUDGE

This matter having come before the Court on Defendant's Motion to Set Aside Recommendations of Norman L. Lippitt, and having heard oral arguments and reviewed the pleadings and the applicable law, this Court issues the following Order:

IT IS HEREBY ORDERED that Defendant's Motion to Set Aside Recommendations of Norman L. Lippitt is denied, Defendant having previously agreed to his involvement.

IT IS FURTHER ORDERED that Defendant is permitted to take the depositions of the following individuals: Peter Badore, Chris Theodore, Charles Centivany, Michael Muth, Michael Pitt, Joseph St. Lawrence, Robert Mocello, Francois Castaing, Robert Lutz and Leroy Richie.

IT IS FURTHER ORDERED that the testimony during deposition shall be limited to the elements of the alleged violations of the Whistle Blower Protection Act and retaliatory discharge in violation of public policy as set forth Defendant's Second Amended Counter Claim.

IT IS FURTHER ORDERED that no questions in deposition are permitted regarding any claimed violation by Chrysler of a government law or regulation, the production or future production of a product with a safety defect, or the concealment or destruction of information concerning the production of a product with a safety defect.

IT IS FURTHER ORDERED that this discovery is to be completed within 45 days.

DAVID F. BRECK
CIRCUIT JUDGE

HON. DAVID F. BRECK
CIRCUIT COURT JUDGE

A TRUE COPY
G. WILLIAM CADDELL
Oakland County Clerk - Register of Deeds
By: _____
Deputy

TAB

27

Summary of Performance Appraisal Comments
Filed by Chrysler Executives
Covering a Two Year Evaluation Period

Subject: Paul V. Sheridan
Reference: Minivan Safety Leadership Team

"Paul (Sheridan) does a thorough, detailed, organized, and tireless job. He became an active promoter of advancing safety in the (minivan) program only slowing when the reality of the interest from management became apparent to him..."

Ronald S. Zarowitz
Manager, Safety Office, (810) 576 - 7305
October 10, 1994

"(Paul Sheridan) has directed various team efforts well, with a strong goal orientation, especially the (minivan) Safety Leadership Team..."

Mark W. Clemons
Manager, Chrysler-Plymouth Marketing, (313) 956 - 3763
October 14, 1994

"Overall I think Paul (Sheridan) has done an excellent job...He has been eager to get involved...Always very open and candid...good planning skills...Good team leader..."

Bernard E. Swanson
Executive Engineer-Minivan Platform
October 16, 1994, (810) 576 - 2908

"Paul (Sheridan) did a good job as Chairman of the Minivan Safety Leadership Team...He brings a valuable engineering perspective to his product planning role...He is willing to speak up when he disagrees, which is good..."

Scott A. Sullivan
Manager, Market Research
October 12, 1994

"I find (Paul Sheridan) to be very innovative and certainly not afraid to push the envelope. His professional yet open demeanor easily wins the respect of his colleagues. He is extremely knowledgeable, and may well be one of the best all around technical persons on staff...Paul is a valuable asset to the (minivan) platform and I rely on him to accomplish our mutual goals"

Paul T. Doolan
Engineering Programs Manager-Minivan
October 10, 1994, (810) 576 - 4837

MULTIPLE INPUT FORM – CONFIDENTIAL

The use of this form is optional. If it is used, however, the guidelines on the back of this form must be followed. Multiple input can provide supervisors with valuable, additional information to consider when completing employee appraisals and development plans. Your input regarding the employee's past year's results and behaviors is appreciated.

Employee Name Paul Sheridan Date 10-10-94

Provider Name (Optional) Ron Zaroweitz How Long Have You Worked with the Employee? 2 years

Relationship to Employee:

____ Customer ____ Supplier ✓ Team Member ____ Subordinate ____ Peer ____ Other ____

RESULTS:

Please provide a brief summary of the employee's success or difficulty in fulfilling his or her job duties related to you. Include specific examples and results.

Paul does a thorough, detailed, organized, and tireless job. He became an active promoter of advancing safety in the NS program, only slowing when the reality of the interest from management became apparent to him. He created & led NS SLT to point of making data-based recommendations to NS management.

BEHAVIORS:

Please list areas where you feel the employee excels or has opportunity for development. Keep in mind the following behaviors:

Innovation/Risk Taking Continually attempts to push forward/try something new/ be inventive.

Teamwork Very interested in team dynamics consensus-building - good leader.

Encouraging/Valuing Diversity Different backgrounds/points-of-view sought out, encouraged.

Communication/Openness/Candor Direct, honest. to the point of being blunt

Continuous Process Improvement (no basis to evaluate)

Planning/Priority Setting Organized NS SLT & ran group effectively/ efficiently. Developed plan to prioritize group objectives.

Problem Solving Creative, up to point of "hitting the wall" - then process steps.

Leadership - good · encourages group input - leads group to make progress - has vision of ultimate goal.

Customer Responsiveness (no basis to evaluate)

Technical Expertise

People Management/Development (for supervisors only)

OTHER COMMENTS OR CONCERNS:

Very strong candidate who could work on achieving "grace under fire" - temper sometimes comes through too quickly when frustrated.

Please return to Dennis Malecki (Name) by _____ (Date)

Thanks!

MULTIPLE INPUT FORM - CONFIDENTIAL

The use of this form is optional. If it is used, however, the guidelines on the back of this form must be followed. Multiple input can provide supervisors with valuable, additional information to consider when completing employee appraisals and development plans. Your input regarding the employee's past year's results and behaviors is appreciated.

Employee Name ***Paul Sheridan*** Date ***October 14, 1994***

Provider Name ***Mark Clemons*** How long have you worked with the Employee? ***2 Years***

Relationship to Employee:

Customer Supplier ***X*** Team Member Subordinate Peer Other

RESULTS:

Please provide a brief summary of the employee's success or difficulty in fulfilling his or her job duties related to you. Include specific examples and results.

Paul has been successful in his duties, especially with the NS teams that he chairs. He is also an enthusiastic team member.

BEHAVIORS:

Please list areas where you feel the employee excels or has opportunity for development. Keep in mind the following behaviors:

Innovation/Risk Taking

Teamwork
Good team player. Assumes team goals well and works aggressively to accomplish team objectives.

Encouraging/Valuing Diversity
Paul is aggressive, opinionated and persistent, traits which can be assets when moderated. However, he occasionally allows his personal views to compromise his effectiveness.
Communication/Openness/Candor
Clear and concise. Expresses views well, both orally and written.

Continuous Process Improvement

Planning/Priority Setting
Has directed various team efforts well, with a strong goal orientation (especially the NS Safety Leadership Team leading up to the NS safety research).
Problem Solving
Good analytical skills. Researches issues well. Brings facts to bear for decision making purposes.

Role Model Behavior/Leadership
Effective in chairing NS Safety Leadership, NS Complexity and NS Exterior Ornamentation teams. Leads discussions well and assists teams in developing necessary outputs.
Customer Responsiveness
Keeps commitments to teams and team members.

Technical Expertise
Displays good understanding relating to chassis items and exterior ornamentation.

People Management/Development (for supervisors only)

OTHER COMMENTS OR CONCERNS:

Please return to ***Dennis Malecki*** by ***October 19, 1994***

Name Date

THANKS!

MULTIPLE INPUT FORM – CONFIDENTIAL

The use of this form is optional. If it is used, however, the guidelines on the back of this form must be followed. Multiple input can provide supervisors with valuable, additional information to consider when completing employee appraisals and development plans. Your input regarding the employee's past year's results and behaviors is appreciated.

Employee Name Paul Sheridan **Date** 10-16-94

Provider Name (Optional) B. E. Swanson **How Long Have You Worked with the Employee?** 2+ YRS ?

Relationship to Employee:

____ Customer ____ Supplier ___+___ Team Member ____ Subordinate ____ Peer ____ Other _____

RESULTS:

Please provide a brief summary of the employee's success or difficulty in fulfilling his or her job duties related to you. Include specific examples and results.

OVERALL I THINK PAUL HAS DONE AN EXCELLENT JOB IN CHAMPIONING REDUCTION IN COMPLEXITY. FROM A CHASSIS PERSPECTIVE, HE HAS BEEN EAGER TO GET INVOLVED IN ISSUES PRESENTED TO HIM. SOMETIMES IT APPEARS HE TAKES ISSUES AS WORK OR A "PERSONAL ISSUES" RATHER THAN AN "EXPOSE THE BUSINESS" FOCUS WHICH I THINK FRUSTRATES HIM WHEN HIS VIEW IS NOT ACCEPTED OR ACTIONED ON. THIS DOES NOT APPEAR TO AFFECT HIS EFFECTIVENESS, HOWEVER, IS A SOURCE OF FRUSTRATION TO HIM.

BEHAVIORS:

Please list areas where you feel the employee excels or has opportunity for development. Keep in mind the following behaviors:

Innovation/Risk Taking

Teamwork

Encouraging/Valuing Diversity

Communication/Openness/Candor – ALWAYS VERY OPEN AND CANDID WITH ME.

Continuous Process Improvement

Planning/Priority Setting DEMONSTRATES GOOD PLANNING SKILLS.

Problem Solving

Leadership TAKE INITIATIVE TO ADDRESS ISSUES. LEADS THE CHARGE

Customer Responsiveness HAS BEEN VERY RESPONSIVE TO CHASSIS ISSUES.

Technical Expertise – ADEQUATE TO MORE THAN ADEQUATE FOR CHASSIS.

People Management/Development (for supervisors only)

OTHER COMMENTS OR CONCERNS:

PAUL HAS A TENDENCY TO GAMBLE ABOUT THINGS WHICH I THINK IS MOSTLY A "PERSONALITY" THING.

Please return to Dennis Malecki **by** _____
Name Date

Thanks! DENNIS, SORRY ABOUT THE QUALITY OF MY WRITTEN RESPONSE. I WOULD BE GLAD TO DISCUSS PAUL

GOOD TEAM LEADER. HAS DONE WELL. HIS FOR EXPANDED ITS

MULTIPLE INPUT FORM – CONFIDENTIAL

The use of this form is optional. If it is used, however, the guidelines on the back of this form must be followed. Multiple input can provide supervisors with valuable, additional information to consider when completing employee appraisals and development plans. Your input regarding the employee's past year's results and behaviors is appreciated.

Employee Name Paul Sheridan Date 10/12/94

Provider Name (Optional) Scott Sullivan How Long Have You Worked with the Employee? 15 MONTHS

Relationship to Employee:

____ Customer ____ Supplier _X_ Team Member ____ Subordinate ____ Peer ____ Other _____

RESULTS:

Please provide a brief summary of the employee's success or difficulty in fulfilling his or her job duties related to you. Include specific examples and results.

PAUL DID A GOOD JOB AS CHAIRMAN OF THE MINIVAN SAFETY LEADERSHIP TEAM DURING THE TIME I WORKED WITH THAT GROUP. HE ACTIVELY PARTICIPATES IN THE PST DISCUSSIONS, AND HE BRINGS A VALUABLE ENGINEERING PERSPECTIVE TO HIS PRODUCT PLANNING ROLE.

BEHAVIORS:

Please list areas where you feel the employee excels or has opportunity for development. Keep in mind the following behaviors:

Innovation/Risk Taking - HE IS WILLING TO SPEAK UP WHEN HE DISAGREES, WHICH IS GOOD.

Teamwork

Encouraging/Valuing Diversity

Communication/Openness/Candor - HIS ARGUMENTS ARE, AT TIMES, A BIT TOO EMOTIONAL. THIS CAN

Continuous Process Improvement WORK AGAINST HIM IN TRYING TO CONVINCE OTHERS.

Planning/Priority Setting - IN A FEW INSTANCES WITH THE SAFETY LEADERSHIP TEAM PAUL GOT

Problem Solving BOGGED DOWN IN DETAILS WHEN THE GROUP WAS READY TO MOVE

Leadership FORWARD.

Customer Responsiveness

Technical Expertise

People Management/Development (for supervisors only)

OTHER COMMENTS OR CONCERNS:

Please return to Dennis Malecki by _____
Name Date

Thanks!

MULTIPLE INPUT FORM – CONFIDENTIAL

The use of this form is optional. If it is used, however, the guidelines on the back of this form must be followed. Multiple input can provide supervisors with valuable, additional information to consider when completing employee appraisals and development plans. Your input regarding the employee's past year's results and behaviors is appreciated.

Employee Name Paul Sheridan Date 10/10/94

Provider Name (Optional) PAUL DOOLAN How Long Have You Worked with the Employee? _____

Relationship to Employee:

____ Customer ____ Supplier ✓ Team Member ____ Subordinate ____ Peer ____ Other _____

RESULTS:

Please provide a brief summary of the employee's success or difficulty in fulfilling his or her job duties related to you. Include specific examples and results.

Some specific examples of Paul's contributions include: tire & wheel plan, suspension complexity reduction matrix, powertrain plan, tire & wheel volumes, and recently exterior ornamentation items.

BEHAVIORS:

Please list areas where you feel the employee excels or has opportunity for development. Keep in mind the following behaviors:

Innovation/Risk Taking

Teamwork

Encouraging/Valuing Diversity

Communication/Openness/Candor

Continuous Process Improvement

Planning/Priority Setting

Problem Solving

Leadership

Customer Responsiveness

Technical Expertise

People Management/Development (for supervisors only)

As a fellow member on several teams with Paul, I find him to be very innovative and certainly not afraid to push the envelope. His professional yet open demeanor easily wins the respect of his colleagues. He is extremely knowledgeable, and may well be one of the best all around technical persons on staff. He is detail oriented, and works hard at his craft. His work on complexity reduction demonstrates good planning and problem solving skills. He is also a very capable communicator, both written and verbal, and appears well organized.

OTHER COMMENTS OR CONCERNS:

Paul is a valuable asset to the platform, and I rely on him to accomplish our mutual goals

Please return to Dennis Malecki by _____

Name Date

Thanks!

Critics rave about Cummins-powered Ram pickups

If a Dodge Ram outfitted with the Cummins 5.9-liter turbo diesel engine were to race a Ford or Chevy truck up a Colorado mountain road, there would be no question who would win. The Dodge Ram would sail up the mountain, while its Chevy and Ford counterparts chugged along in its dust.

In fact, in just about any endurance competition imaginable, the Dodge Ram truck would obliterate its competition.

This is not frivolous hype or propaganda generated by zealous marketing types. The example is based on testimonials by industry trade journals.

For instance, *Road Test Magazine* writes, "The Dodge-Cummins pickup outdistances its Ford and Chevy counterparts in every meaningful category."

"Dodgzilla" is a term coined by *Four Wheeler* magazine to describe the Dodge Ram pickup.

Why the acclaim? The engine powering the Dodge Ram—the Cummins diesel 5.9-liter six-cylinder turbo engine—has no equal, according to Paul Sheridan, Jeep/Truck Engineering Engine Program Manager. It's the only factory-installed turbo diesel available in a pickup.

Referred to by Sheridan as the "Ferrari of the diesel engines," the Cummins is largely responsible for the recent success of Dodge Ram trucks in the marketplace.

The Cummins engine is in nearly half of all Dodge full-size pickup trucks sold. Dodge sold 30,000 turbo diesel pickups in the 1990 model year and projects sales of 44,000 units in 1991.

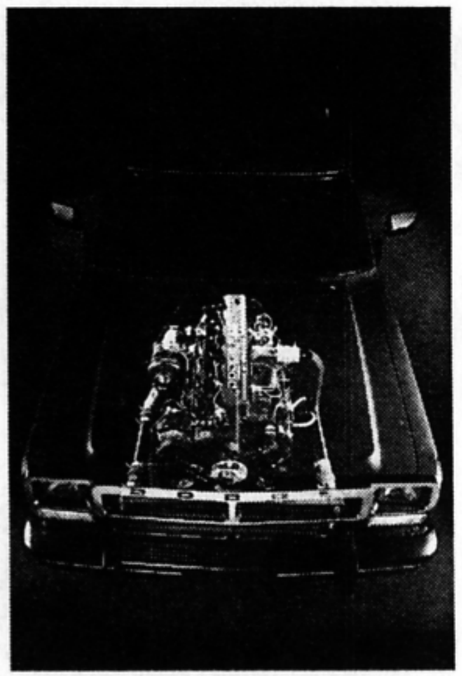

The Cummins engine is in nearly half of all Dodge full-size pickup trucks sold. Dodge sold 30,000 turbo diesel pickups in the 1990 model year and projects sales of 44,000 units in 1991.

Jerome Magid

Among the Cummins diesel team members who worked to ensure a smooth launch were, from left, Eugene Shensky, Product Change Analyst; Ken Scobel, Cummins On-Time Assembly; Walter Ralph, Vehicle Development Specialist; Troy Simonsen, Product Planning Manager; Greg Henderson, Design Aids Supervisor; and Paul Sheridan, Engine Programs Manager.

"We are approaching 50 percent of Ford's volume after only three years in the diesel business," Sheridan added. "Our problem is not demand, but supply of available engines from Cummins. We can't fill customer orders fast enough."

The 1989 model year production was sold by December 1988, and 1990 production sold out by February 1990.

"We can't determine how great the demand is, because we haven't hit the ceiling yet," Sheridan said.

A diesel engine survey found that if given the option, one out of four Ford and General Motors diesel pickup buyers would pay an extra $1,000 for a truck powered by a Cummins engine.

The engine was first used in the Dodge Ram full-size pickup trucks in 1989, but preparations to modify a Cummins diesel for the truck date back to 1985.

Eight Chrysler employees, part of the core Truck Operations group, approached the Cummins people namely because at the time the company was "the only game in town," Sheridan said. Ford was getting its diesel engines through Navistar, and General Motors manufactured its own and purchased some from Detroit Diesel.

Chrysler provided Cummins with a Dodge Ram truck and the assignment of making a Cummins diesel engine that could fit into the chassis.

Cummins completed its assignment and the engine is now available in the Ram D-250 and D-350, both two- and four-wheel drive.

"We achieved this success over the years using a skeleton crew, minimal budget and a complicated but necessary release program," Sheridan said.

In addition to offering an engine intercooler to meet strict emissions standards, the 1991-1/2 model offers a four-speed automatic overdrive transmission that will boost the truck's current top speed of 80 mph and further improve its fuel economy and performance.

December 1990
Design Engineering/Manufacturing
Cost Reduction Results

Digest

In the News

STANDARD & POOR'S placed the Big Three automakers on its CreditWatch list Jan. 9 because of a worsening economic picture.

Chrysler said, "We are, of course, disappointed... but given the difficult environment the industry is in, we can understand their concern. We know our minivans and sport utilities face increasing competition, but are confident that they remain the class of the field and able to withstand the assault."

Chrysler will have an opportunity to present its case to Standard & Poor's.

Innovation

AL BARRETT, Mark Huber, Mike Larson, Don McCutcheon and Jim Pitt represented Chrysler in accepting an award from the Society of Automotive Plastics for the company's use of plastic in body interiors. In conjunction with Entech, Rockwell and General Electric, the group developed a plastic bolster that saves $18 per vehicle and 8.3 pounds in body weight. The bolster is used in the Eagle Premier and Dodge Monaco.

People

IN THE DODGE/WJR RADIO Quest for Excellence music competition, Beth Barley took first place and won a $5,000 scholarship. She is the daughter of Lou Barley, a tool engineer from Chrysler's Mound Road Engine Plant in Detroit.

IN RECOGNITION OF

EXCELLENCE IN ACHIEVING

...to be the BEST

"Your Personal Best"

1985

Advance Product Planning Office

to be the Best Goals

PAUL V. SHERIDAN

L. A. Iacocca

E. A. Reickert

P. C. Badore

J. M. Hossack

H. E. Cook

K. S. Mack

TAB

28

MEETING REVISION NOTICE

SUBJECT: Safety Leadership Team Update

DATE: Monday, November 7, 1994

TIME: ~~11:00 - 12:00 noon~~
3:00 - 4:00 p.m.

LOCATION: T.R. Cunningham's CTC Conference Room
Executive Suite Conference Room F

CALLED BY: R.A. Winter

INVITEES:
M.W. Clemons
M.W. Crossman
T.R. Cunningham
M.T. Delahanty
W.H. Hines
N.E. Hoxsie
H.E. Kifer
K.S. Mack
D.C. Malecki
F.W. Schmidt
P.V. Sheridan
R.S. Zarowitz

Arranged by: Sue McKesson
776-2911

Intra Company Correspondence

To--Name & Department		Telephone	Date
		776-4824	October 26, 1994
	Executive Vice President - Sales & Marketing		CIMS Number
Theodor R. Cunningham	General Product Manager - Minivan		484-14-08
From--Name & Department			CIMS Number
	Chairman - Safety Leadership Team		
Paul V. Sheridan	Product Planner - Minivan Operations		482-08-02

Subject: Minivan Safety Leadership Team (SLT) - - Status Update (per your request)

STATUS

The SLT has not been meeting during the last 10 - 12 weeks. Member morale is low; they have relegated the subject to a lower priority. Please see 'Discussion' below.

BACKGROUND

The SLT was formed in March 1993, and continues to be chaired by Minivan Operations. The charter of the group was to provide the MPT with direction and priority regarding the implementation of safety features, in the context of maintaining safety leadership in the minivan segment. To accredit the SLT, membership included every relevant group, from Engineering to Competitive Analysis to Legal/Safety Office. The merits of this effort were verified via trends in the "Purchase Reasons" data for minivan owners/intenders. (This format was approved by you during a special Minivan Operations meeting in February 1993.)

The SLT workload was immediate and substantial. Early accomplishments included:

- Inputs to the Legal staff to refute the leadership claims made by Ford in their original Winstar copy.

- Coordination of standard ABS recommendation on NS-Body platform.

- Reinstatement of 5 mph rear bumper on NS-Body.

When a feature/concept was of debatable merit, or disagreement existed within or outside the SLT, both qualitative and quantitative research was employed to assist with resolution:

- Qualitative research was formulated to ascertain the overall opinions/biases of minivan customers in the category of safety. These focus groups were conducted in Chicago and San Diego to establish geographic inputs. This phase of SLT efforts was completed in November 1993.

- Quantitative research was formulated on the basis of the information provided in the November focus groups. The SLT feature questionnaire was formatted for inclusion with the advertising positioning research clinics conducted in May/June 1994. Again, geographic considerations were to be an important part of SLT recommendations, and therefore the clinics were scheduled for both the Boston and Santa Clara locations.

BACKGROUND con't

Three dominant themes emerged from the research:

- Safety is very important to the minivan segment, especially Chrysler corporate buyers.

- Safety features must be demonstrably substantial...not "gimmicks and gizmos".

- Our customers are increasingly satisfied with the safety features that protect them from frontal incidents. The execution of front seat belts, enhanced front seat position structural enhancements, and, most prominently, dual front air bags, have all contributed to this status.

Two strategies were developed in response to these themes/activities:

- There is an opportunity to enhance our position in the minivan segment by executing safety features for side related incidents , and to a slightly lesser extent rear incidents.

- Chrysler should not make overt safety leadership claims (ala Ford Windstar). Rather, we should execute substantial safety features, and allow our customers to conclude for themselves that Chrysler is the segment leader. An optimal mix of reality and image would be developed. The SLT led this discussion; now a corporate position.

Preparation for the May/June advertising positioning research involved time constraints that restricted the number/type of safety features to be researched. The SLT had documented a list of 50 - 60 items. We consolidated the list to 13 items for the Boston/Santa Clara clinics. Side-related features were prioritized. It was requested that the SLT questionnaire be limited to a 15 minute maximum. We accommodated that request.

DISCUSSION

There are three salient events that contribute to the STATUS.

The day just prior to the Boston clinic, it was requested that we remove 'side air bags' from the list. This late notice did not allow any further discussion within the SLT. 'Side air bags' had been discussed for over a year, and were thoroughly qualified/verified as a priority by the November 1993 focus groups. All represented groups to the SLT had strongly supported inclusion of 'side air bags' in the clinics. A substantial amount of last-minute work was expended to remove 'side air bags' since the question was already programmed. We are not able to make objective recommendations regarding minivan segment acceptability, cost/price sensitivity, technical approach/execution, etc. This latter deficiency continues to be problematic given intensive competitive activity/advertising on side air bags. The marketplace is generally aware of side air bags, but all related work that was proceeding on the MPT has been halted.

DISCUSSION con't

SLT membership attended both the Boston and Santa Clara research locations. To save costs, arrangements were made 3 - 4 weeks prior to the June 4 - 6 schedule in Santa Clara. On June 3 the safety research items were unilaterally removed from the Santa Clara clinic. Many SLT participants had already departed for the West coast, and therefore were not aware of this decision. If informed in a timely manner, it is highly likely that they would have chosen to save company time/expense, since their participation was now marginal or no longer required. Obviously they were "disappointed" upon arrival at the clinic. As a result we are not able to ascertain the geographic influences on the 13 safety features.

The SLT preferred to present your office with formal follow-up on the safety feature research results. This discussion would have allowed you to provide concurrence, empowerment, and specific feedback to SLT recommendations. Several of the 13 safety features submitted to the clinics were deemed to be "unprecedented" with respect to customer acceptance. Others were strongly rejected. In several cases, properties were used to demonstrate/substantiate a safety feature/concept. Only those features receiving very high scores were proposed for execution by the MPT. All appropriate areas within the MPT were involved, as were all appropriate meeting forums. These formalities involved substantial analysis/coordination/consensus prior to product plan inclusion. Engineering bulletins were subsequently written in response to the product plan updates. As of this writing, most MPT work on the SLT recommendations has been halted.

CONCLUSION

Other areas/platforms frequently look to the Minivan Platform as a precedent when embarking on a new topic. The Minivan Safety Leadership Team is a recent example. The Minivan Complexity Team is an ongoing example. There are others. However, it is not the magnitude (quantity) of our efforts that attracts attention, it is the formality (quality). Characteristically, the SLT has adhered to consensus, objectivity, and due process; financial, technical, etc. We avoid subjectivities, personal opinions, and organizational partialities. This *modis operandi* emphasizes customer preferences/requirements...our ultimate objective. SLT membership is concerned that its approach/subject is not fully endorsed, or a priority of upper management. Without this endorsement it is difficult for the SLT to deliver on the safety leadership agenda that you approved for the Chrysler minivan (i.e. NS-Body).

RECOMMENDATION

We do not believe that your office has had an adequate chance to participate in the decisions that will maintain Chrysler's momentum in safety leadership via the launch of the NS-Body. We recommend that you schedule a formal review of the work conducted to-date by the Minivan Safety Leadership Team.

cc: D. Bostwick, T. Edson, M. Levine, D. Malecki, C. Theodore, S. Torok, R. Winter, Minivan Safety Leadership Team

Perry & Haas, L.L.P.
ATTORNEYS AT LAW

2100 Frost Bank Plaza, P.O. Box 1500, Corpus Christi, Texas 78403-1500
Telephone: 512/880-7500 Facsimile: 512/887-9507
Direct Dial: 512/880-7543

July 15, 1996

Mr. Paul Sheridan
22357 Columbia Street
Dearborn, Michigan 48124-3431

Via Fax: (313) 277-5095

Re: *Gonzalez v. Chrysler*

Dear Paul:

On Friday, July 12, we had a hearing to try to release 30,000 pages of Chrysler documents, all of the depositions taken (including yours), and other materials produced in the case. The Judge basically produced it all. Here is some press coverage that relates to the same. The deposition that you gave in the case is no longer under seal and has been quoted extensively in the Dallas Morning News article. After we won the hearing, I gave them a copy of the transcript. The transcript and the videotape are now considered public record.

You may want to let Courtney know about this, as it may affect what you all want to do in terms of the next step of your lawsuit.

I assume that the above pleases you.

Very truly yours,

PERRY & HAAS, L.L.P.

Mikal C. Watts

Mikal C. Watts

MCW/jlh

Attachments

MIKAL C. WATTS
Attorney at Law

Perry & Haas is a limited liability partnership that includes professional corporations

CAUSE NO. 37,316

JOHN AND TAMMY MATTHEWS, INDIVIDUALLY AND AS NEXT FRIENDS FOR STEVI WESTON, A MINOR	§	IN THE DISTRICT COURT OF
VS.	§	ANDERSON COUNTY, TEXAS
CHARLES ORTIZ SMITH, ELKHART INDEPENDENT SCHOOL DISTRICT, CHRYSLER CORPORATION, AND ROGER CONN CHRYSLER-DODGE-PLYMOUTH-JEEP-EAGLE, INC.	§	THIRD JUDICIAL DISTRICT

ORDER
RE: EXHIBITS TO PAUL SHERIDAN DEPOSITION

On July 12, 1996 certain documents consisting of Exhibits to the Deposition of Paul Sheridan were submitted for in camera inspection. After examining the documents submitted it is ordered that:

(a) The protections claimed for Exhibits: 8, 10, 12, 22 and 23 are denied;

(b) The protections claimed for Exhibits: 11, 14, 15, 16, 17, 18, 19, 20, 21 and 50 are sustained.

(c) The Exhibits which are protected pursuant to this order shall remain sealed and filed with the papers of this cause.

(d) The Exhibits submitted which are not protected pursuant to this order are ordered to be placed in a seperate envelope and sealed by the District Clerk for 14 days from this date.

If there is no further order before that date the Clerk is then directed to unseal those records and make them available for inspection during normal business hours

Signed this 22 day of July, 1996.

O. Edelman
Presiding Judge

and
11:20 a.m.
JUL 22 1996
District Clerk
By

TAB

29

Advertising
Classifieds
Personals
Job listings
Model Homes
Place an ad

Essentials
Editorials
Horoscope
Lottery
Weather
Death Notices
CyberSurvey
Search Engine
Back Issues
Site highlights

Sections
Accent
Autos
Business
Casino Guide
Comics
Cyberia
Discovery
Food
Golf Guide
Homefinder
Homestyle
Mail from the net
Metro
Metro Center
MetroLife
Money
Movie Finder
Nation/World
Obituaries
Outlook
On Detroit
Rearview Mirror
Screens
Showtime
Sports
Sports: College
Sports: Preps
Sports: Lions
Sports: Pistons
Sports: Wings
Sports: Tigers
TV Listings
Voices

Contacts
By e-mail
Post letters to The News

Person-to-person
Staff

GM can't gag critic, court says

Supreme Court rules against automaker for whistleblower

By Larry Bivins / Detroit News Washington Bureau

WASHINGTON -- The Supreme Court cleared a path for corporate whistleblowers Tuesday by ruling against General Motors Corp.'s attempt to prevent a former employee from testifying in product liability cases.

In a unanimous decision, the justices held that a Michigan court order does not preclude former GM engineer Ronald Elwell from testifying against the automaker in other states where he has been subpoenaed.

"Michigan has no authority to shield a witness from another jurisdiction's subpoena power in a case involving persons and causes outside Michigan's governance," Justice Ruth Bader Ginsburg wrote in the court's opinion.

The ruling has enormous financial implications for the nation's largest automaker and other companies that want to bar the testimony of expert witnesses, usually former employees, in liability lawsuits that could lead to jury awards of hundreds of millions of dollars.

"There was a potential to put a gag on all these people," Clarence Ditlow, director of the Center for Auto Safety in Washington, said of the case known as Baker vs. GM. "GM was hoping to leverage this case across the country."

GM issued no formal statement. Spokesman Kyle Johnson said the company "will be guided by the Supreme Court's ruling."

That ruling stemmed from a lawsuit filed in Missouri by the sons of Beverly Garner, who died in a fiery 1990 collision involving her Chevrolet Blazer.

A trial court awarded the plaintiffs $11.3 million. An appeals court overturned the decision, saying Elwell should not have been allowed to testify because of the Michigan injunction.

Elwell is a much-sought-after witness in lawsuits involving motorists who were killed in fiery crashes blamed on faulty GM fuel tank and fuel pump designs.

Supporters of the court ruling said the decision sends a signal that whistleblowers such as Elwell have protection.

"It sends a message to GM and to other corporations that they will not be able to pay witnesses for silence and get away with it," said J. Kent Emison, attorney for the Bakers.

Jeffrey White, a lawyer with the Association of Trial Lawyers in America, said the ruling was significant for product liability cases as well as environmental, employment discrimination and patent cases.

He said companies now would be reluctant to coerce gag-order settlements with employees.

addresses

By phone
Departments and editors

Circulation
Home delivery

Search

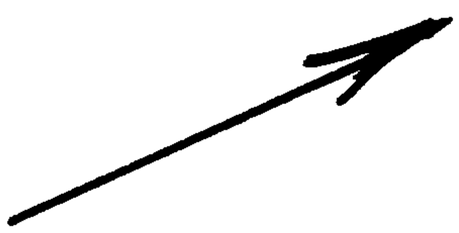

settlements with employees.

"Today the justices have told GM it can no longer gag its whistleblowers or smother their revelations, no matter how damaging they are for the company," said Public Citizen President Joan Claybrook.

GM's Johnson noted that the Supreme Court sent the case back to be retried. He said the company may pursue other tactics to prevent Elwell from testifying.

At the same time, Johnson tried to minimize the impact of Elwell as a witness, saying "there are cases where Mr. Elwell has testified and we have won the case."

One Detroit whistleblower who was buoyed by Tuesday's judgment is Paul Sheridan, a fired Chrysler Corp. employee who has spoken out about problems with the automaker's rear liftgate minivan latches.

His testimony about the latch designs played a role in a $265-million jury award against Chrysler in South Carolina, the largest against an automaker.

"In the long run, eliminating the muzzle order option will ultimately reduce product liability litigation by ensuring that safety is prioritized," Sheridan said.

His situation was mentioned in the Supreme Court case.

Copyright 1998, The Detroit News

By James Vicini

WASHINGTON (Reuters) - The Supreme Court Tuesday dealt a setback to General Motors Corp., unanimously ruling that courts in one state may not prevent courts in other states from hearing relevant testimony.

In a closely watched business case, the high court held that a ruling issued in one state may not be used to prevent relevant testimony in a separate lawsuit in another state.

Overturning a ruling that threw out an $11.3 million damage award against GM, the justices specifically said a former GM employee should be allowed to testify in a product liability case involving a fatal crash.

The justices held that a Michigan state court order does not bar the former employee from testifying in a federal trial in another state.

GM obtained a Michigan court order barring the former employee, engineer Ronald Elwell, from testifying as an expert witness in lawsuits against the company.

The order was part of a settlement of litigation between GM and Elwell, who sued the company in 1991. Elwell earlier had testified that the GM pickup truck fuel system was inferior to competing products.

In 1993 Elwell testified as a witness in a lawsuit brought in federal court in Missouri against GM by the children of Beverly Garner, a front-seat passenger in a 1985 Chevrolet Blazer who was killed in a 1990 crash.

The suit alleged that a fire after the collision had been caused by a faulty fuel pump.

Justice Ruth Bader Ginsburg said in the high court opinion that the Constitution requires courts in one state to give "full faith and credit" to court actions in other states. But, she said, the Michigan ruling does not bar Elwell's testimony.

``Michigan's judgment ... cannot reach beyond the Elwell-GM controversy to control proceedings against GM brought in other states by other parties ... asserting claims the merit of which Michigan has not considered," she said.

``Most essentially, Michigan lacks authority to control courts elsewhere by precluding them ... from determining for themselves what witnesses are competent to testify and what evidence is relevant and admissible in their search for the truth," Ginsburg said from the bench.

``Michigan, in other words, has no authority to shield a witness from a sister state's subpoena power in a case involving persons and causes outside Michigan's governance," she said.

Ginsburg added that a Michigan court decree ``cannot command obedience elsewhere on a matter the Michigan court lacks authority to resolve."

A jury awarded $11.3 million in damages to Garner's family, but a U.S. appeals court overturned the award on the grounds that the trial judge had been wrong in allowing Elwell to testify.

The Supreme Court overturned the appeals court decision.

GM had asserted in the case that the fuel pump was not faulty and was not the cause of the fire. It had also asserted that Garner was killed by collision impact injuries alone.

GM's lawyers said that if Garner's family wanted Elwell's testimony, they should have gone to Michigan and asked the court there to lift its order.

The ruling was a defeat for Whitewater independent counsel Kenneth Starr, who was listed in the briefs as GM's lead attorney. Starr has been criticized for continuing to work for private clients during the long Whitewater investigation.
^REUTERS@

12:43 01-13-98

Advertising
Classifieds
Personals
Job listings
Place an ad

Essentials
Editorials
Horoscope
Lottery
Weather
Death Notices
Search
Engine
Back Issues
Site
highlights

Sections
Accent
Autos
Business
Casino Guide
Comics
Cyberia
Discovery
Food
Golf Guide
Homestyle
Macomb
Mail from the
net
Metro
Metro Center
MetroLife
Money
Movie Finder
Nation/World
Obituaries
Outlook
On Detroit
Rearview
Mirror
Screens
Showtime
Sports
Sports:
College
Sports: Preps
Sports: Lions
Sports:
Pistons
Sports: Wings
Sports: Tigers
TV Listings
Voices

Contacts
By e-mail
Post letters

Justices review scope of state court's control

Case pivots around whether GM can stop whistleblowers from testifying against firm.

By Bradley A. Stertz / The Detroit News Washington Bureau Chief

WASHINGTON -- "So Michigan can rule the world?"

With that pointed question, Justice Ruth Bader Ginsburg and the rest of the U.S. Supreme Court tackled the high-stakes issue of whether companies like General Motors Corp. can run to their local courts to muzzle whistleblowers.

The case centers on a Wayne County state court injunction limiting testimony that Ron Elwell, a former GM engineer, can give against the automaker. Elwell has been a highly sought-after witness in lawsuits involving motorists who died in fiery crashes purportedly linked to faulty GM fuel tank and fuel pump designs.

The Supreme Court is reviewing an $11.3-million jury verdict against GM that was reversed by a judge who said Elwell should not have been allowed to testify in the Missouri case in which a woman died.

"Michigan is going to decide what evidence is going to come in all over the country?" Ginsburg asked in one of several sharp questions the panel asked GM's attorney, Paul Cappuccio.

The case -- called Baker vs. GM for the Missouri family suing the automaker -- is loaded with enough important implications to attract legal heavyweights such as Harvard constitutional law expert Laurence Tribe on the side of the Bakers and Whitewater special prosecutor Kenneth Starr on GM's team.

It also attracted Paul Sheridan who was fired by Chrysler Corp. and has since spoken out about problems with Chrysler's rear-gate minivan latches. His testimony played a role in a $262.5-million jury decision against Chrysler in South Carolina, the largest judgment any automaker has faced.

Sheridan paid his way from Dearborn to attend the Supreme Court arguments, only to spend the entire hour shivering outside in line.

Still, his interest in the case involving whistleblowers like himself was unabated. "The importance of this cannot be underestimated," Sheridan said.

The ruling that will come from the high court, perhaps by the end of this year, could affect the enforcement of such issues as child custody rulings and noncompete clauses in employment contracts if people move to different states. But the biggest impact will be felt in the arena of product liability and the ability of companies to wall off potential whistleblowers.

"It's a road map for keeping information out of the hands of the

to The News

Person-to-person
Staff addresses

By phone
Departments and editors

Circulation
Home delivery

court and the public with far-reaching implications for product safety in America," said Clarence Ditlow, director of the Center for Auto Safety in Washington. "I don't know any whistleblower in the country who can stand up to the kind of pressure" that would come down if the court decides in favor of GM.

Copyright 1997, The Detroit News

Quote :

Our job on the Safety Leadership Team was to provide recommendations to upper management that maximized the safety of past, current and future Chrysler minivan customers and passengers. Muzzle orders or secret agreements issued from behind closed doors under the guise of 'trade secrets' were never a part of our recommendations. By severely limiting the legally-premised options, the Supreme Court has sent the signal that the approach taken by the minivan safety team is more consonant with the original genius of the First Amendment of the Constitution. In the long run, eliminating the muzzle order option will ultimately reduce product liability litigation by ensuring that safety is prioritized and executed on a product development basis, as opposed to a legal basis. This in turn will maximize the competence of the product and the actual goodwill of the automaker, making the plaintiff attorney's job virtually impossible.

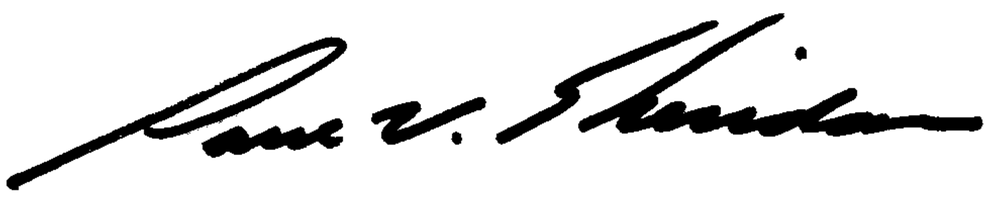

Paul V. Sheridan
Former Chairman of Two Years (1993/1994)
Chrysler Minivan Safety Leadership Team
13 January 1998

TAB

30

Federal Express Corporation
Customer Support
Domestic Trace
3875 Airways Boulevard
Module H, 4th Floor
Memphis, TN 38116

U.S. Mail: PS Box 727
Memphis, TN 38194-4643

Telephone 901-369-3600

Federal Express

May 12,1997

PAUL SHERIDAN
(313) 277-5095

Dear PAUL SHERIDAN:

This is in response to your request for proof of delivery for package tracking number 8967460810. You will find the delivery information below.

SHIPMENT INFORMATION:

Tracking No: 8967460810

Ship Date: March 21, 1996

Shipper: PAUL SHERIDAN
SHERIDAN,PAUL V
22357 COLUMBIA ST
DEARBORN, MI 48124
US

Recipient: MIKE FULLER
THE WHITE HOUSE
1600 PENNSYLVANIA AVEUE
WASHINGTON, DC 20502
US

DELIVERY INFORMATION:

Signed For By: R.BUENAFLOR

Delivered to: 1600 PENN AVE NW

Delivery Date: March 22, 1996

Delivery Time: 09:12 AM

Your business is greatly appreciated and we look forward to the opportunity of serving your future express shipping needs.

Federal Express Corporation
Worldwide Customer Service
1-800-GO-FEDEX
Reference No: 0501033017

TAB

31

Blue Cross
Blue Shield
of Michigan

March 29, 1995

BCBS of Michigan
Chrysler COBRA Unit, B463
600 Lafayette East
Detroit, Mi 48226
(810) 354-8420

Mr. Paul V. Sheridan
22357 Columbia
Dearborn, Mi 48124-3431

Account Number: 198421

Dear Mr. Sheridan:

This is to inform you that we are in receipt of your COBRA Enrollment Form.

After reviewing your enrollment form, we find that you and any dependents are ineligible for COBRA. This is due to the determination by your former employer, Chrysler Corporation, that for purposes of COBRA, your dismissal was as a result of gross misconduct.

Accordingly, you will receive no further correspondence from us on this matter.

Sincerely,

Michael Mattei
Administrator
Chrysler Membership Services

CHRYSLER SALARIED EMPLOYEES' SAVINGS PLAN

April 09, 1997

Soc. Sec. No. 131-42-3183

PAUL V SHERIDAN
22357 COLUMBIA
DEARBORN MI 48124-3431

700760
01925-01

Dear PAUL V SHERIDAN:

We have recently received notice that you have terminated your employment with Chrysler Corporation. You have the following options:

- **I.** If the vested value of your account is greater than $3,500.00, you can leave your assets in the Plan until the earlier of:

  a) March 1st of the calendar year in which you attain age 71 1/2, or
  b) you request a total distribution.

  You may also request partial withdrawals from your account in accordance with the provisions of the Plan.

- **II.** If your vested account balance is $3,500.00 or less, your account will automatically be paid out on the last business day of the third month following the month in which you terminated your employment. You will receive a separate notification regarding the distribution of your account if you do not request a total distribution.

  You may request a total distribution or partial withdrawal from your account prior to the automatic distribution. You may elect to receive your total distribution or partial withdrawal in cash only, in stock only, or a combination of both.

If you have an outstanding loan balance, you may continue making loan repayments by sending your check or money order and the Check Deposit Form directly to the Merrill Lynch Customer Service Center each month.

If you want to speak with a Customer Service Representative regarding your distribution options or loan repayments, or if you want to request a total distribution or partial withdrawal from your account, please call the Merrill Lynch Customer Service Center toll-free at 1-800-483-7283 (SAVE) any business day between 8:00 am and 7:00 pm Eastern Time.

Merrill Lynch Group Employee Services

Merrill Lynch

Criminal Gross Negligence

"Gross negligence" is culpable or criminal when accompanied by acts of commission or omission of a wanton or willful nature, showing a reckless or indifferent disregard of the rights of others, under circumstances reasonably calculated to produce injury, or which make it not improbable that injury will be occasioned, and the offender knows or is charged with knowledge of the probable result of his acts; "culpable" meaning deserving of blame or censure.

Bell v. Commonwealth, 170 Va. 597, 195 S.E. 675, 681.

END OF DOCUMENT

ENCLOSURE TWO

Dear Friends:

As you probably know, Jackie Glassman has recently been appointed Chief Counsel of the National Highway Traffic Safety Administration. We cordially invite you to join us for a reception in Jackie's honor:

Thursday, March 14, 2002
5:30 pm – 7:30 pm

Fulbright Center
Hogan & Hartson L.L.P.
555 13th Street, N.W.
13th Floor – West Tower
Washington, DC

R.S.V.P. to Angela Minor at arminor@hhlaw.com.

HOGAN & HARTSON LLP

ENCLOSURE THREE

Please see:

http://www.youtube.com/user/pvsheridan#p/u/19/25roI1nhOwI

ENCLOSURE FOUR

FedEx Express
Customer Support Trace
3875 Airways Boulevard
Module H, 4th Floor
Memphis, TN 38116

U.S. Mail: PO Box 727
Memphis, TN 38194-4643

Telephone: 901-369-3600

June 4,2010

Dear Customer:

The following is the proof-of-delivery for tracking number **869667283713**.

Delivery Information:

Status:	Delivered	**Delivery location:**	1200 N.J. AVE SE W41 306 20590
Signed for by:	T.MAPP	**Delivery date:**	Jun 4, 2010 13:15
Service type:	Standard Box		

Shipping Information:

Tracking number:	869667283713	**Ship date:**	Jun 3, 2010
		Weight:	2.0 lbs/0.9 kg

Recipient:
DAVID STRICKLAND
NHTSA-WEST BLDG
1200 NEW JERSEY SE
20590 US

Shipper:
PAUL SHERIDAN
SHERIDAN, PAUL V
22357 COLUMBIA ST
481243431 US

Reference KLINE

Thank you for choosing FedEx Express.

FedEx Worldwide Customer Service
1.800.GoFedEx 1.800.463.3339

To: Mr. Clarence Ditlow, Director *
Center for Auto Safety
Suite 330
1825 Connecticut Ave, NW
Washington, DC 20009-5708
(202) 328-7700

Date: 1 June 2010 VIA EMAIL AND FEDEX 1283181-00003186

From: Mr. Paul V. Sheridan
DDM Consultants
22357 Columbia Street
Dearborn, MI 48124-3431
313-277-5095 / pvs6@Cornell.edu

Subject 1: Jeep Grand Cherokee Defect Petition 09-005 (DP-09-005) File Update

Subject 2: Has Chrysler Group LLC Declared the Bankruptcy Order Void?

Courtesy Copy List

Ms. Angel M. DeFilippo
Grieco Oates & DeFilippo, LLC
414 Eagle Rock Avenue
West Orange, NJ 07052
973-243-2099

Mr. David L. Strickland
NHTSA Headquarters/West Building
1200 New Jersey Avenue, SE
Washington, DC 20590
888-327-4236

Senator Frank Lautenberg
324 Hart Senate Office Building
District of Columbia 20510-3003
202-224-3224

Ms. Silvia Gambardella
Special Projects Producer- WTVD
411 Liberty Street
Durham, NC 27701
919-687-2219

Mr. Courtney E. Morgan, Jr.
Morgan & Meyers, PLLC / Suite 320
3200 Greenfield Road
Dearborn, MI 48120
313-961-0130

Honorable Arthur J. Gonzalez, Chief Judge
U.S. Bankruptcy Court for the
Southern District of New York
One Bowling Green
New York, NY 10004-1408
(212) 668-2870

Senator Carl Levin
269 Russell Senate Office Building
Washington, D.C. 20510-2202
202-224-6221

Mr. Brian S. Malone
Publisher/Editor
Times of Trenton
500 Perry Street
Trenton, N.J. 08605
609-989-5665

* *Available with hyperlinks here:* http://links.veronicachapman.com/Ditlow-Baker-1.pdf

DDM Consultants
22357 Columbia Street
Dearborn, MI 48124-3431
313-277-5095
pvsheridan@comcast.net

1 June 2010

Mr. Clarence Ditlow, Director
Center for Auto Safety - Suite 330
1825 Connecticut Ave, NW
Washington, DC 20009-5708
(202) 328-7700

Subject 1: Jeep Grand Cherokee Defect Petition 09-005 (DP-09-005) File Update
Subject 2: Has Chrysler Group LLC Declared the Bankruptcy Order Void?

Dear Mr. Ditlow:

Review

Previously I had submitted DaimlerChrysler Safety Recall No. A10–Fuel Tank Blocker Bracket [1] as a file update to the subject (Attachment 1). What remains significant about this document is that it represents the first time that three key words were used connectedly and simultaneously with respect to the Jeep Grand Cherokee:

"safety"
"skid plate"
"repaired"

Although the underlying portent is well-understood internally to Chrysler and its dealers, Safety Recall A10 represented the first admission that Grand Cherokee fuel tank safety/crashworthiness issues could be "repaired" by existence or installation of a skid plate. Alternatively, I have not located MOPAR documentation or Chrysler new vehicle sales order guides that promote these three key words simultaneously. MOPAR materials use phraseology such as "recreation" when selling the fuel tank skid plate to the aftermarket. The new vehicle sales brochures/documents for option package "XEE" use similar descriptions. [2]

Again, prior to my discovery/submission of Safety Recall A10 to the lawsuit of Kline v. Chrysler, Lomans, et al., these three key words were never simultaneously offered to the public; either from Chrysler, from Chrysler dealerships, or from NHTSA (Attachment 1). [3]

---

[1] Dated February 2002, I was unable to locate Safety Recall A10 at the NHTSA website, and it was only recently that you located its cover letter of January 4, 2002 from Matthew Reynolds of the DaimlerChrysler Vehicle Compliance Office.

[2] Although refusing to be interviewed, Chrysler re-emphasized this public posturing/vernacular in their statement submitted to an ABC News report which described the death of Mrs. Susan Kline; a case we reviewed pictorially in Attachment F of DP-09-005.

[3] As you will see below, Chrysler's promotional use of the phrase 'fuel tank skid plate' is misleading since it implies a purpose restricted to mere recreation. In truth, the essential elements of fuel system crashworthiness are intrinsic to its purpose/design. Internally, for decades, and at the engineering level, it has been referred to as *"a protective impact deflection structure."*

Subject 1: Jeep Grand Cherokee Defect Petition 09-005 (DP-09-005) File Update

I recently re-acquired a document that was part of my Chrysler FMVSS-301 files (Attachment 2). This "CONFIDENTIAL" August 24, 1978 memo by Mr. Leonard Baker, former Safety Manager of Chrysler Engineering,[4] is entitled: Fuel System Design–Chrysler Passenger Car and Trucks. The subsection "Truck – Fuel Tank Location" states:

> *" Chrysler is investigating fuel tank relocation ahead of the rear wheels for vans and multipurpose vehicles, but present plans for pickups through 1983 and for MPV's and vans through 1985 have the fuel tank located behind the rear wheels. In vehicles both with and without bumpers there is a concern with vertical height differences that create a mismatch with passenger car bumpers. Where fuel tank location behind the rear axle is all that is feasible, a protective impact deflection structure may have to be provided whether or not a bumper is provided. An investigation whether to relocate the fuel tank or to provide impact deflecting structures is presently underway. "* (Attachment 3)

In stark contrast to an "on the surface" wording that was legally deployed in Safety Recall A10, this "Baker memo" of the former Chrysler Corporation (Old Carco) confirms detailed internal knowledge of the following fundamental fuel system defect/crashworthiness issues:

1. The fundamental lack of safety when fuel tanks are NOT located "*ahead of the rear wheels*" (such as in the Ford Pinto or the 1993-2004 Jeep Grand Cherokee).
2. The fundamental lack of safety when fuel tanks are located below the rear bumper, and are therefore vulnerable to the underride accident scenario due to *"a concern with vertical height differences that create a mismatch with passenger car bumpers"* (such as in the1993-2004 Jeep Grand Cherokee).
3. The fundamental lack of safety when fuel tanks are unshielded; that is, when these have NOT been provided with *"a protective impact deflection structure"* (i.e. a fuel tank skid plate, which would have "repaired" the 1996 Jeep Grand Cherokee driven by Mrs. Kline). [5]

All three of these fuel system defect/crashworthiness issues were intrinsic to the accident sequence which occurred on February 24, 2007; leading to the horrific death of New Jersey resident Mrs. Susan Kline. All three fuel system defect/crashworthiness issues were corrected in 2005 with the WK version of the Jeep Grand Cherokee; an engineering design which was heavily influenced by Daimler which has not had any fire related severe burn or death victims. [6]

---

[4] Mr. Baker later moved to an organization promoted as the Product Analysis Group. In-truth Product Analysis is part of the Chrysler Legal department. In this later role, Baker reported to staff such as Mr. Lewis Goldfarb (Lead attorney for safety defect litigation) and Mr. William O'Brien (Chrysler Counsel); both of whom were involved in the confiscation of my Chrysler office safety files (Attachment 2). Attachment 3 was written to Mr. Robert M. Sinclair, who later became Executive VP of Chrysler Engineering, reporting to President Hal Sperlich and Chairman Lee Iacocca.

[5] Please see footnote 3, page one. It should be recognized that discussion of *"a protective impact deflection structure"* was occurring/extensive during a period when plastic fuel tanks were not yet in use at Chrysler.

[6] Option "XEE" is not available on the 2005-2010 WK Jeep Grand Cherokee since these versions are equipped with *"a protective impact deflection structure"* (i.e. a fuel tank skid plate) as standard. This is also true for the 2011 WL version which shares major development/part commonality with the Mercedes-Benz ML Class SUV (which has never included the three fuel system design defects described by Baker).

Subject 2: Has Chrysler Group LLC Declared the Bankruptcy Order Void?

I am sharing this "Confidential" Baker memo with no moral or ethical risk. However, public disclosure of related or similar documents may pose a legal risk.

On March 30, 2009 President Obama announced the determination by his 'Auto Task Force' that a taxpayer-funded bailout would require that Chrysler LLC (Old Carco) file for bankruptcy. The latter was granted by Judge Arthur Gonzalez of the U.S. Bankruptcy Court for the Southern District of New York on June 1, 2009. Since that ruling, billions of taxpayer dollars have been funneled to Chrysler Group LLC (New Carco), including a near-billion-dollar grant to Chrysler dealers. In bankruptcy court filings Chrysler declared that it will:

"Only pay incentives to those dealers that they believe have value to the acquiring company."

Respecting the President's knowledge of the bankruptcy laws, Chrysler continually emphasized distinctions between entities that possessed value versus those that did not. Old Carco, allegedly bankrupt circa June 1, 2009, was publicly and unequivocally declared as having no value. Indeed, minutes after the President's announcement, plaintiffs nationwide hurriedly received a facsimile entitled, "Notice of Suggestion of Bankruptcy" alleging this 'no value' status (Attachment 4).

However, in the case of Kline v. Chrysler, Lomans, et al., Chrysler Group LLC has ostensibly declared the bankruptcy status of Old Carco as void. In response to discovery (served on April 22, 2010 for production on May 7, 2010) Chrysler Group LLC has unabashedly reversed its earlier legal position regarding the 'no value' status of Old Carco by repeatedly resurrecting the following pre-bankruptcy rhetoric against plaintiffs:

> *"Assuming an appropriate protective order is entered, Chrysler Group LLC will produce the documents by May 28, 2010. Almost all the (Old Carco) documents you are seeking contain confidential commercial information. As such, Chrysler Group LLC will not produce these (Old Carco) documents without a protective order in place. I will forward a proposed protective order to you with the discovery responses."* (Attachment 5)

In order to secure the billion-dollar taxpayer-funded bailout, Chrysler Group LLC was compelled to liquidate the assets of Old Carco and declare it insolvent (i.e. bankrupt). However, in the closed-door realm of safety defect litigation, Chrysler Group LLC is now proclaiming that this publicly promoted claim of liquidation/insolvency was merely a ruse; that in-reality Old Carco retains substantial value, and therefore the Baker memo and related or similar discovery documents which relate to an *"investigation presently underway"* are commercially proprietary, confidential, and valuable.

Respectfully yours,

Paul V. Sheridan

Enclosures/Attachments

Attachment 1

DAIMLERCHRYSLER

February 2002

Dealer Service Instructions for:

Safety Recall No. A10 -- Fuel Tank Blocker Bracket

Effective immediately, all repairs on involved vehicles are to be performed according to this recall notification. The labor operations for the interim service procedure that was published in the A10 electronic mail (DMAIL) message of January 4, 2002 will be cancelled on March 15, 2002. Those vehicles that have already been repaired by having a skid plate installed, do NOT require any additional service.

Models

2002 (WJ) Jeep® Grand Cherokee

NOTE: This recall applies only to the above vehicles that are equipped with a fuel tank brush guard (WITHOUT Sales Code – XEE) built through December 13, 2001 ***(MDH 121317)****.*

IMPORTANT: Some of the involved vehicles may be in dealer new vehicle inventory. **Federal law requires you to stop sale and complete this recall service on these vehicles before retail delivery.** Dealers should also consider this requirement to apply to used vehicle inventory and should perform this recall on vehicles in for service. Involved vehicles can be determined by using the DIAL VIP System.

Subject

About 71,000 of the above vehicles may not comply with the requirements of Federal Motor Vehicle Safety Standard (FMVSS) 301 – Fuel System Integrity. Under certain accident conditions, the fuel tank may deform and damage an internal control valve. This could allow fuel leakage to occur if the vehicle rolls over. Fuel leakage in the presence of an ignition source can result in a fire.

Repair

A fuel tank blocker bracket must be installed on all involved vehicles.

© Copyright 2002, DaimlerChrysler Corporation, All Rights Reserved

Parts Information

Part Number	Description
CBJ0A100	**Fuel Tank Blocker Bracket**

Each dealer to whom vehicles in the recall were invoiced will receive enough Blocker Bracket Packages to service about **10%** of those vehicles. Each package contains a blocker bracket and a spacer.

Service Procedure

1. Raise the vehicle on an appropriate hoist.
2. Support the fuel tank with an OTC Fuel Tank Jack or equivalent.
3. Remove the four (4) fuel tank-to-rear bumper fascia clips (Figure 1).
4. Loosen, but do not remove, the bolts for the two (2) rear brush guard-to-frame support brackets (Figure 2).

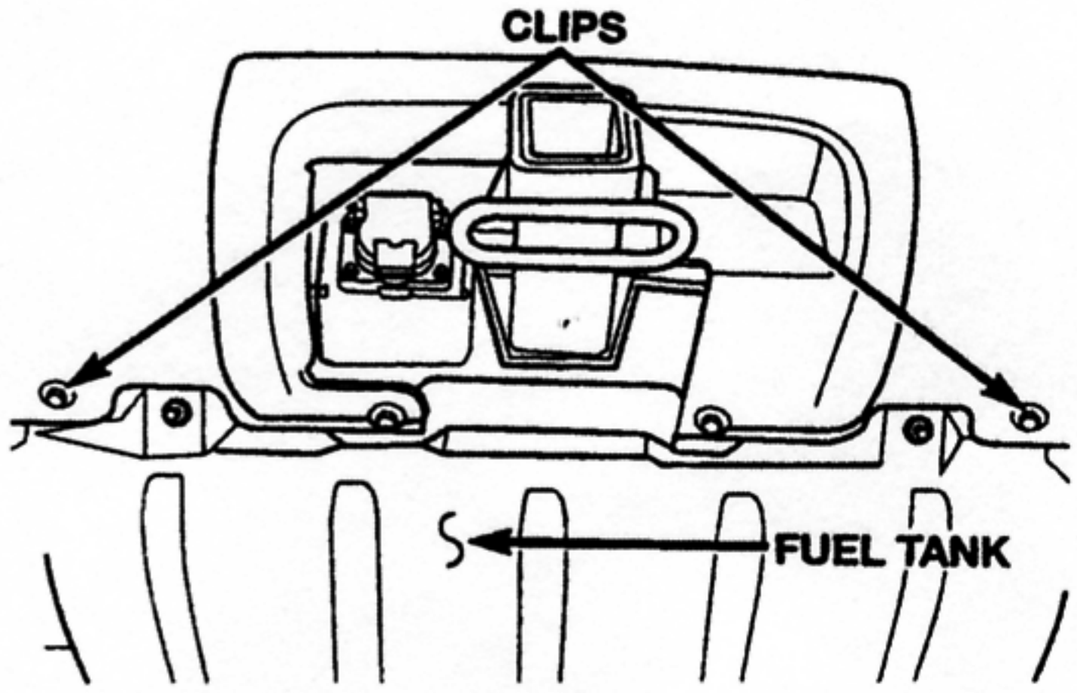

Figure 1

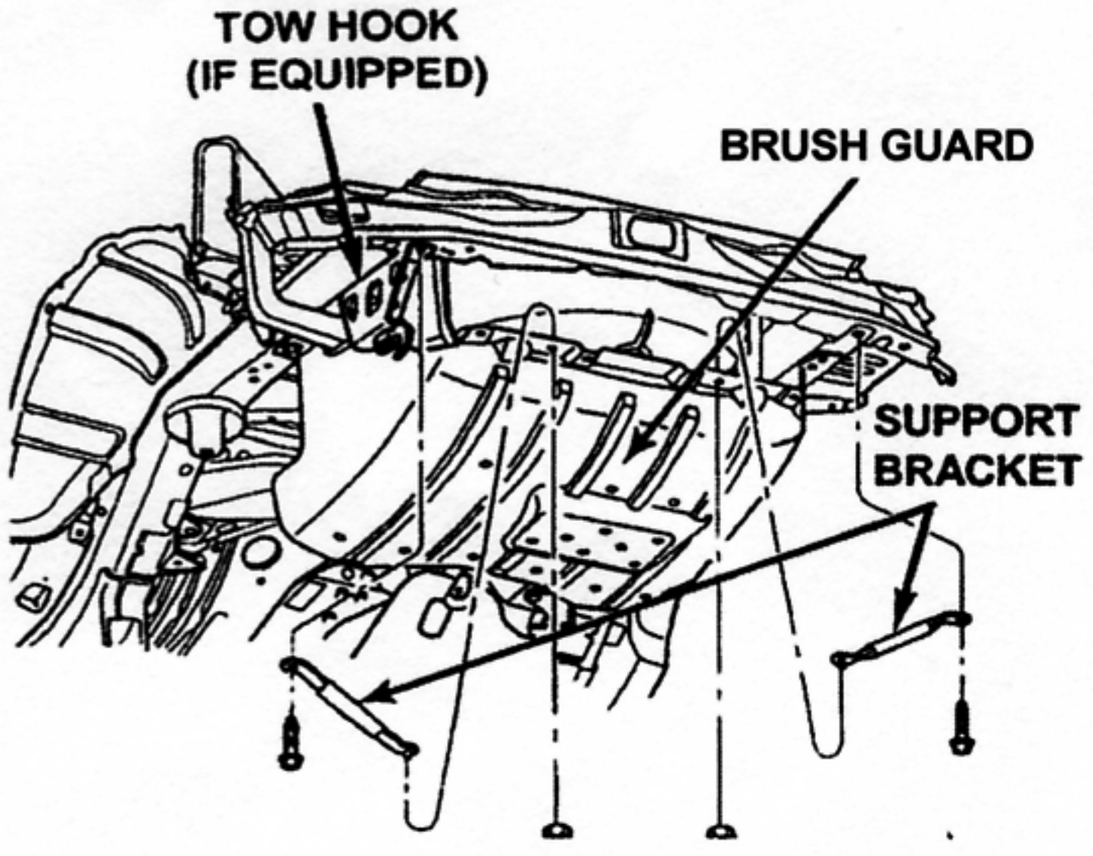

Figure 2

Service Procedure (Continued)

5. Loosen, but do not remove, the bolts for the front brush guard-to-frame support bracket (Figure 3).

6. Disconnect the electrical harness clip from the left side of the brush guard.

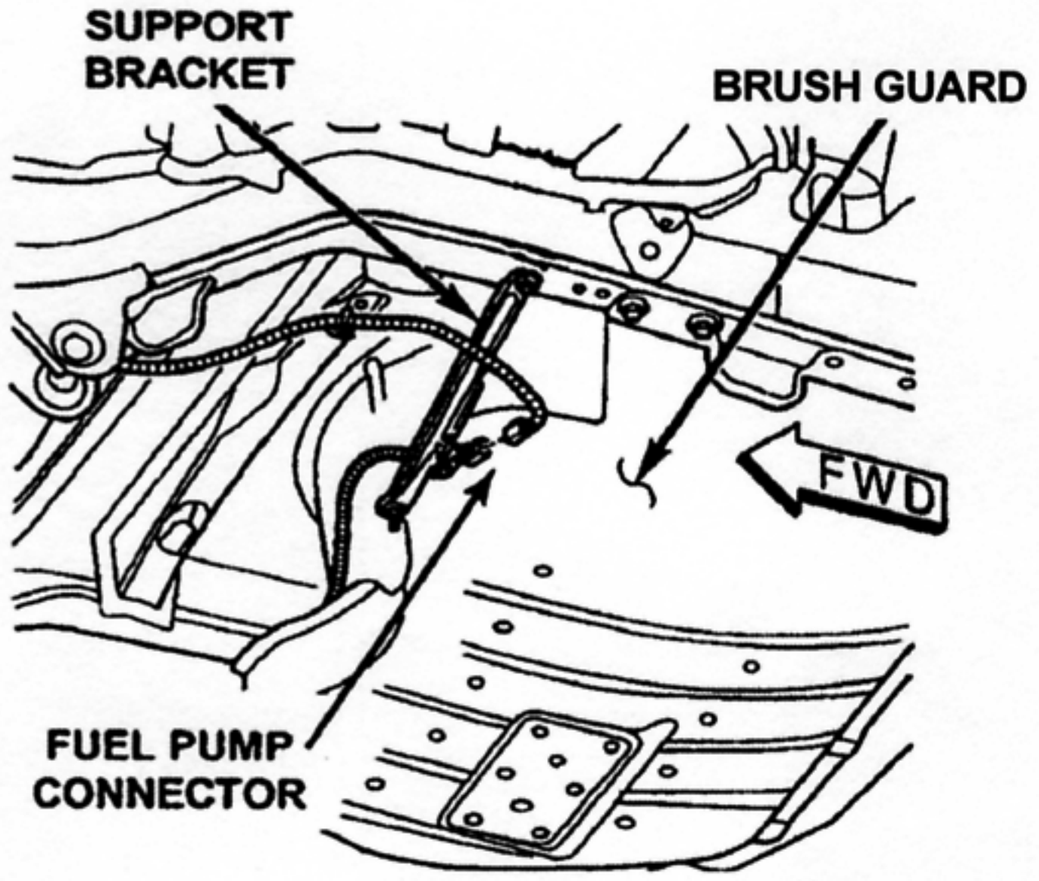

Figure 3

7. Remove the three (3) forward-most LEFT SIDE brush guard/trailer hitch (if equipped) mounting bolts (Figure 4). **Do NOT remove the rear left brush guard/trailer hitch mounting bolt.**

8. Loosen, but do not remove, the remaining four (4) brush guard bolts (one left side and three right side).

9. **<u>For vehicles equipped with a trailer hitch</u>,** loosen but do not remove, the two (2) rear-most trailer hitch bolts.

10. Using a large pry bar, reposition the fuel tank/brush guard assembly as far to the right side of the vehicle (passenger side) as possible.

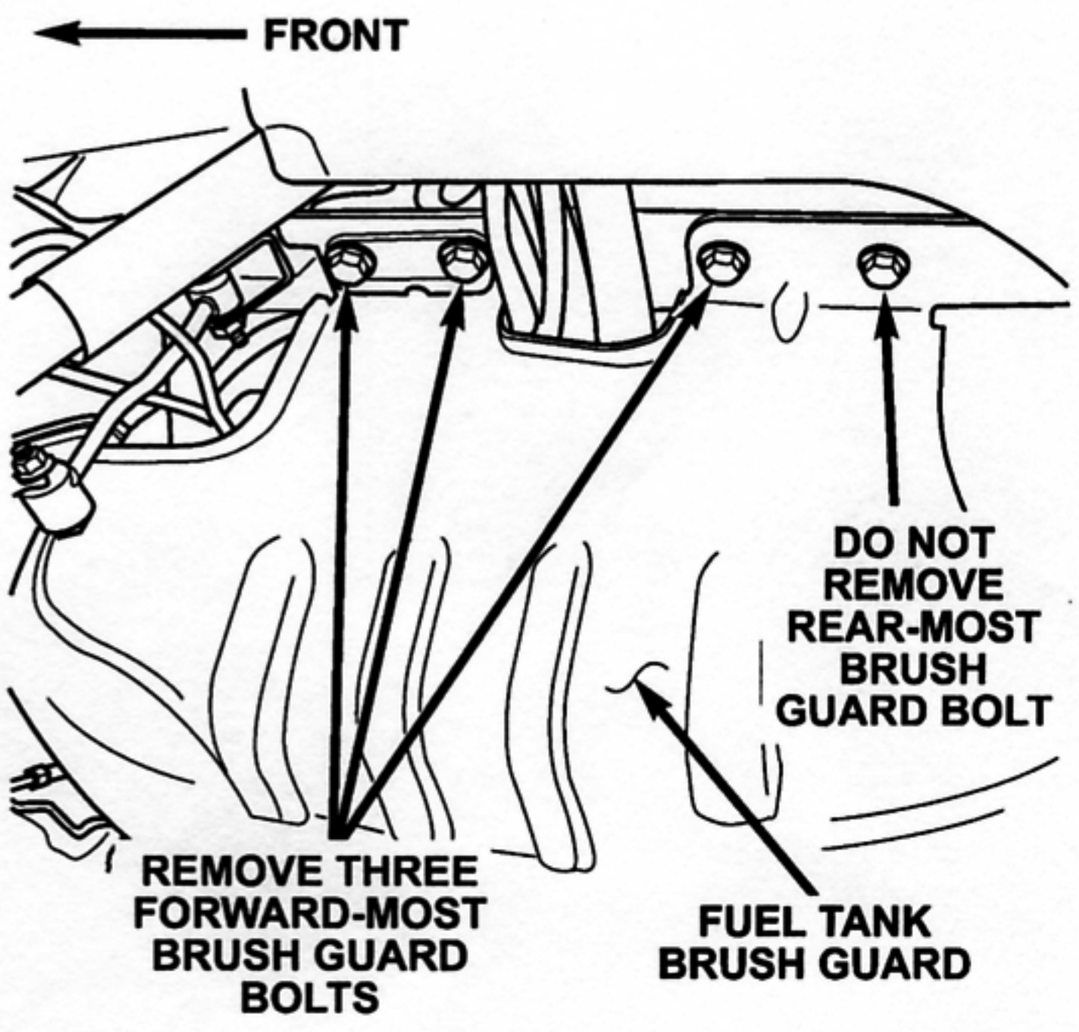

Figure 4

Service Procedure (Continued)

11. With an assistant holding the tank assembly in the right-most position, and using a 12 inch extension, tighten the three right and the rear-most left, brush guard bolts to 65 ft-lbs (88 N·m).

12. **For vehicles equipped with a trailer hitch,** tighten the two (2) rear-most trailer hitch bolts to 65 ft-lbs (88 N·m).

13. Install the fuel tank blocker bracket adjacent to the left side of the fuel tank brush guard (Figure 5).

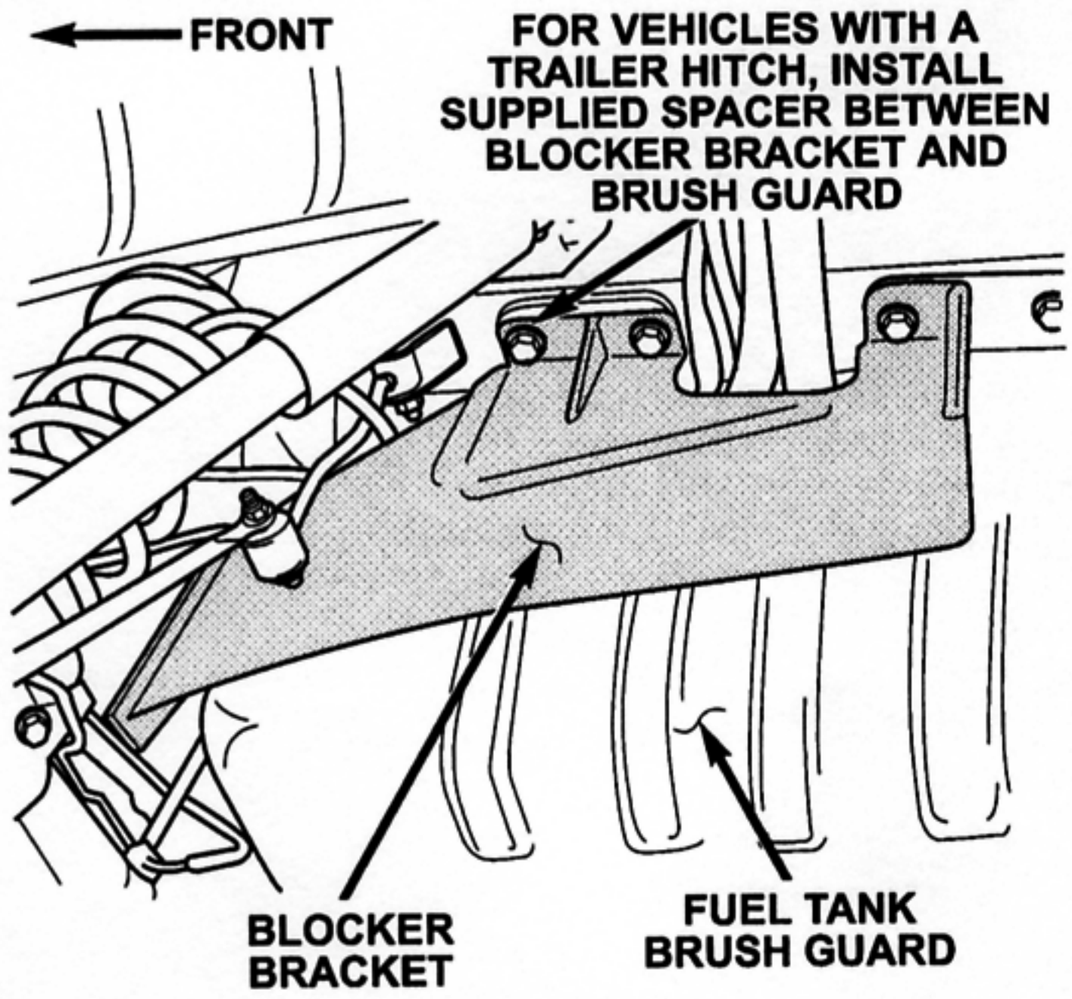

Figure 5

IMPORTANT: For vehicles equipped with a trailer hitch, install the supplied spacer between the blocker bracket and the brush guard at the forward-most bolt hole location.

14. Position the blocker bracket as far to the right as possible (next to the brush guard) and then install the fuel tank brush guard/trailer hitch mounting bolts (Figure 5). Using a 12 inch extension, tighten the bolts to 65 ft-lbs (88 N·m).

IMPORTANT: Tighten the forward-most blocker bracket bolt first.

15. Secure the electrical harness to the blocker bracket with the harness clip. If the clip was damaged during removal, use a new clip (PN 04688451).

16. Tighten the front brush guard-to-frame support bracket bolts (Figure 3).

17. Tighten the bolts for the two (2) rear brush guard-to frame support brackets (Figure 2).

18. Install the four (4) rear fascia-to-fuel tank push pins (Figure 1).

19. Remove the fuel tank support.

20. Lower the vehicle.

Completion Reporting and Reimbursement

Claims for vehicles that have been serviced must be submitted on the DIAL System. Claims submitted will be used by DaimlerChrysler to record recall service completions and provide dealer payments.

Use the following labor operation number and time allowance:

	Labor Operation Number	Time Allowance
Install Fuel Tank Blocker Bracket	14-A1-01-84	0.3 hours

Add the cost of the recall parts package plus applicable dealer allowance to your claim.

NOTE: See the Warranty Administration Manual, Recall Claim Processing Section, for complete recall claim processing instructions.

Parts Return

Not applicable.

Dealer Notification and Vehicle List

All dealers will receive a copy of this dealer recall notification letter by first class mail. Two additional copies will be sent through the DCMMS, and the MDS2 will be updated to include this recall in the near future. **Each dealer to whom involved vehicles were invoiced will receive a list of their involved vehicles.** The vehicle list is arranged in Vehicle Identification Number (VIN) sequence. Owners known to DaimlerChrysler are also listed. The lists are for dealer reference in arranging for service of involved vehicles.

DIAL System Functions 53 and VIP

All involved vehicles have been entered to DIAL System Functions 53 and VIP for dealer inquiry as needed.

Function 53 provides involved dealers with an updated VIN list of their incomplete vehicles. The customer name, address and phone number are listed if known. Completed vehicles are removed from Function 53 within several days of repair claim submission. To use this system, type "53" at the "ENTER FUNCTION" prompt, then type "ORDA10".

Owner Notification and Service Scheduling

All involved vehicle owners known to DaimlerChrysler are being notified of the service requirement by first class mail. They are requested to schedule appointments for this service with their dealers. A copy of the owner letter is attached.

Enclosed with each owner letter is an Owner Notification Form. The involved vehicle and recall are identified on the form for owner or dealer reference as needed.

Vehicle Not Available

If a vehicle is not available for service, let us know by filling out the pre-addressed Owner Notification Form or describe the reason on a postcard and mail to:

DaimlerChrysler Corporation
CIMS 482-00-85
800 Chrysler Drive East
Auburn Hills, Michigan 48326-2757

Additional Information

If you have any questions or need assistance in completing this action, please contact your Zone Service Office.

Customer Services Field Operations
DaimlerChrysler Corporation

Attachment 2

LAW OFFICES

CHAMBERS STEINER

A Professional Corporation

1490 FIRST NATIONAL BUILDING
DETROIT, MICHIGAN 48226-3592

Telephone (313) 961-0130
Fax (313) 961-8178

KALAMAZOO OFFICE
7040 STADIUM DRIVE
KALAMAZOO, MICHIGAN 49009
Telephone (616) 375-4300
Fax (616) 375-4077

ROSEVILLE OFFICE
25235 GRATIOT AVE.
ROSEVILLE, MICHIGAN 48066
(810) 773-3455

JOHN F. CHAMBERS
SANFORD L. STEINER
MICHAEL S. MAZUR
ALEXANDER T. ORNSTEIN
DARRELL M. AMLIN
COURTNEY E. MORGAN
JEFFREY T. MEYERS
ANGELA J. NICITA
LOUIS G. COREY
JOHN I. KITTEL
RICHARD J. CAROLAN
MICHELLE J. HARRISON
PATRICIA A. MURRAY
CHRISTOPHER S. HARTMAN
FRANKLIN J. CHAMBERS
MARTIN R. STURM
KEVIN P. BURCH
DOUGLAS A. MERROW
LISA A. KLAEREN
FRANK B. MELCHIORE
DANIEL C. BROWN

July 14, 1995

Thomas G. Kienbaum, Esq.
500 Woodward Ave., Suite 4000
Detroit, Michigan 48226-3406

Re: Chrysler vs. Sheridan

Dear Mr. Kienbaum:

I am in receipt of your most recent correspondence regarding the magistrate's recommendation and our providing of information to you regarding office materials. I do not know how you could have reasonably concluded from the correspondence that was forwarded to you that we are of the opinion that there is no basis to conclude that evidence may have been tampered with in this case. Indeed, the anxiety exhibited by the fact that you immediately faxed your reply to me suggests that in reality you hold the opposite opinion. Due to the necessity of my attendance at federal court in Wichita, Kansas this week, I did not believe that I was going to be able to comply with the July 14, 1995 deadline. Now, it appears that we are in a position to comply.

The information provided hereunder is based upon our limited and restricted ability to review materials which were allegedly seized from Mr. Sheridan's work space. That review is neither complete, nor did it have as its purpose the ferreting out of all details of evidence tampering which may exist. Lack of inclusion of any specific item in this list shall not be taken as an admission of the authenticity of such a document or other tangible item.

The document submitted by the plaintiff entitled, "Confidential Inventory of Material from Paul V. Sheridan's Cubicle at the Chrysler Technology Center", dated March 16, 1995, has numerous general inconsistencies and inaccuracies based on defendant's knowledge and cursory examination of the actual inventory:

1. This "inventory" fails to list and does not contain the following files:

- Liftgate Latch - General
- Liftgate Latch - Competitive
- Safety Leadership Team - Meeting Minutes
- Safety Leadership Team - Preliminary
- Liftgate Latch - Safety Office
- H. G. Cook Study
- FMVSS 206 - General
- Seat Back Strength - General
- Seat Back Strength - FMVSS 207 Specifications
- Offset Impact - General
- Rear Crash Survivability - General
- FMVSS - 301
- Side Crashworthiness Issues
- FMVSS - 214
- Bumper Issues - General
- NS-Body Bumper
- Taillamp Studies - Zarowitz
- Amber Taillamp - NS-Body
- Rear Seat Headrest - General and Zarowitz
- Back-up Light - General

2. The "inventory" lists files but inaccurately portrays their original/current contents:

- Box #1 - File "NS Liftgate System". This file contained subfiles such as "Customer Injury", "Saginaw", et al. Also contains photographs that were originally in the "Liftgate Latch - General" file which is missing per #1 above. (see page 4 of inventory).

- Box #1 - File "NHTSA News" contains only half its original contents (see page 4 of inventory).
- Box #1 - File on "Muth Technologies" not listed; subfile "RSZ" not listed (see page 4).

- Entry on page 8 of inventory indicates that a file contained "correspondence for Dr. Detroit Motorsports". No correspondence was ever sent to Mr. Sheridan's Chrysler office for Dr. Detroit Motorsports, nor was any on file at that location.

3. The "inventory" identifies files and file locations by box number but the location identified was found to be inaccurate.

4. The "inventory" fails to explain/list file materials that were found in the actual inventory by defendant:

- Documents relating to FMVSS-208 dated December 21 were found in Box #1 in file "NS-Restraints". This file is not listed on inventory. (see page 4)

5. This "inventory" fails to accurately explain/list documents allegedly found in the cubicle, as described during the deposition of plaintiff's investigators.

6. The "inventory" fails to list files that were found in the actual inventory.

7. The "inventory fails to list/identify location of specific video tapes:

- Environmentally Safe Oil Changes
- Formula SAE
- IIHS Bumper Tests
- Etc.

8. The "inventory" fails to accurately list contents of computer disks and computer hard drive.

This response is not complete. Further examinations of inventory is still pending. Preliminary examinations cover documents listed through page 18, but not Box #7. Document listings from page 18 through 39 have not yet been examined.

Sincerely,

Courtney E. Morgan, Jr.

CEM/mn
cc: George Googasian, Esq.
(Via Facsimile)

Attachment 3

"C O N F I D E N T I A L

Inter Company Correspondence

File Code: | Date: August 24, 1978

From—Name & Department	Division	Plant/Office	CIMS Number
R. M. Sinclair, Director International Product Development	Product Plan. & Design Office	Chrysler Center	416-20-15

To—Name & Department	Division	Plant/Office	CIMS Number
L. L. Baker, Manager Automotive Safety	Engineering Office	Chrysler Center	418-12-34

Subject: Fuel System Design - Chrysler Passenger Cars And Trucks.

Pursuant to the discussions between Messrs. Vining, Jeffe, Sperlich and yourself with Mr. Mochida on August 22, the fuel system design for domestic passenger cars and trucks is summarized for Mr. Mochida's information.

Not only are the impact performance requirements of MVSS-301 pertinent to the design approach but the significant increase in the last few years in the numbers of product liability cases involving fuel system fires and the increase in the size of the awards by sympathetic juries has to be recognized. In the Ford Pinto case the NHTSA Office of Defects Investigation selected arbitrary performance criteria of minimal or no fuel leakage when the test car is impacted in the rear by a full size car at 35 mph as a basis for questioning the safety of a recall modification of the Pinto.

- Passenger Car

  Fuel Tank Location

  The front wheel drive configuration in Chrysler's Omni and Horizon allowed the fuel tank to be located beneath the rear seat. This location provides the protection of all of the structure behind the rear wheels—as well as the rear wheels themselves—to protect the tank from being damaged in a collision. This same location will be used in the new 1981 K-Body cars which will also have a front wheel drive.

  The rear wheel drive H-Body scheduled for introduction in 1983 will have the fuel tank located over the rear axle and beneath the floor pan.

  The question of whether M, R or J-Body cars should be converted to tank over axle prior to their phase-out is a matter under intensive study at this time.

  Filler Neck And Cap

  As the fuel tank is moved to a more forward location, the fuel fill is moved to the side of the car. The fuel cap will be recessed below the body surface and a fuel fill door provided. The fuel filler neck is designed to break away from the car body with the fuel filler cap still in place.

  In this design the filler cap and fill neck or fill tube remain with the tank to avoid separation and possible fuel leakage. This side fill is scheduled for J and M-Bodies in 1980 and the Y-car in 1981.

The fuel fill is less likely to be damaged in a sideswipe when located on the right side of the car. As new models are introduced, the fuel fill will be moved to the right side of the vehicle. This may also offer greater protection to drivers who run out of gasoline on the highway, since they will fill the tank on the side away from the traffic.

Structure

In 1979 through 1983, the M, R, and J model cars which have the fuel tank under the floor pan behind the rear wheels, structural reinforcement of the longitudinals on each side of the tank, shielding of any unfriendly surfaces adjacent to the tank, and the design of straps and hangers to limit undesired tank movement will be employed.

. Truck

Fuel Tank Location

The same principles regarding fuel tank location apply to truck design. It is important that these larger fuel tanks are not only shielded from damage in a collision but do not break away from the truck and thereby spread fuel onto the roadway. The approach used by Mitsubishi on the SP-27 of locating the fuel tank ahead of the rear wheels appears to provide good protection for the tank.

The front wheel drive T-115 to be introduced in 1982 will have the fuel tank ahead of the rear wheels and under the rear seat. However, in rear wheel drive trucks there is no clearance over the axle for fuel tank installation and in many cases there is insufficient space ahead of the axle for fuel tanks of the desired capacity.

Chrysler is investigating fuel tank relocation ahead of the rear wheels for vans and multi-purpose vehicles, but present plans for pickups through 1983 and for MPV's and vans through 1985 have the fuel tank located behind the rear wheels. In vehicles both with and without bumpers there is a concern with vertical height differences that create a mismatch with passenger car bumpers. Where fuel tank location behind the rear axle is all that is feasible, a protective impact deflection structure may have to be provided whether or not a bumper is provided. An investigation whether to relocate the fuel tank or to provide impact deflecting structures is presently underway.

Fill Neck And Cap

All trucks and vans have side fill. The sweptline pickup truck (DW 1-3) and multi-purpose vehicles (AD-1 & AW-1) will have a recessed fill cap and fuel filler door beginning in 1981.

L. L. Baker

Attachment 4

HANLON BOGLIOLI & HANLON PC

ATTORNEYS AT LAW

ROBERT M. HANLON*
BERNARD F. BOGLIOLI*
BONNIE H. HANLON*
ROBERT M. HANLON, JR.^
MARY O'KEEFE MASSEY*
ROBERT M. COOK¤

WILLIAM F. HANLON (1901-1972)

OF COUNSEL
ALBERT W. CORNACHIO III+

P.O. BOX 6147
EDISON, NEW JERSEY 08818
(732) 346-9555
FAX (732) 346-1501

HAND DELIVERY
523 RARITAN CENTER PARKWAY
EDISON, NEW JERSEY 08837

800 WESTCHESTER AVENUE, S-608
RYE BROOK, NY 10573
(914) 220-5322 / FAX (914) 696-0450

WEST LONG BRANCH, NJ
(732) 229-8020 / FAX (732) 870-0772

RICHARD P. GROSSMAN, JR.*
RICHARD J. MIRRA*
CHRISTINE GIORDANO HANLON^

* Admitted NJ Only
^ Admitted NJ & NY
¤ Admitted NJ & PA
+ Admitted NY Only

REPLY TO: EDISON

May 1, 2009

Clerk
Morris County Superior Court
Morris County Court House
Washington and Court Streets
PO Box 910
Morristown, New Jersey 07963-0910

RE: Kline v. Chrysler LLC, et al
Docket No. MRS-L-3575-08
Our File No. 2805

Dear Sir/Madam:

Enclosed are an original and one copy of a Notice of Suggestion of Bankruptcy staying all litigation against Chrysler LLC.

Kindly file same and return a stamped filed copy to this office in the enclosed self-addressed stamped envelope.

Thank you for your attention in this regard.

Very truly yours,

ROBERT M. COOK

RMC/laf
Enclosures
cc: Angel M. De Filippo, Esq.
Grieco, Oates & De Filippo, LLC

Margaret M. Mitchell, Esq.
Weston, Stierli, McFadden & Capotorto

MAY - 4 2009

cc: Michael J. Rossignol, Esq.
Law Office of Michael J. Rossignol

James T. Gill, Esq.
Leary, Bride, Tinker & Moran

HANLON BOGLIOLI & HANLON PC
P.O. Box 6147
Edison, New Jersey 08818 (Mailing Address)
523 Raritan Center Parkway
Edison, New Jersey 08837
(732) 346-9555
Attorneys for Defendant, Chrysler LLC
improperly plead as DaimlerChrysler Corporation a/k/a Chrysler Corporation

THOMAS KLINE, as Administrator Ad Prosequendum of the Heirs at Law of SUSAN MORRIS KLINE (Deceased), as Administrator of the Estate of SUSAN MORRIS KLINE, and THOMAS KLINE, Individually Plaintiffs, vs. VICTORIA MORGAN-ALCALA, CARLOS ALCALA, NATALIE RAWLS, DAIMLERCHRYSLER CORPORATION, a/k/a CHRYSLER CORPORATION, LOMAN AUTO GROUP, JOHN DOES, A through Z, (Names being fictitious), ABC CORPORATIONS, 1 through 100, (Names being fictitious), Defendants.	SUPERIOR COURT OF NEW JERSEY LAW DIVISION: MORRIS COUNTY DOCKET NO. MRS-L-3575-08 Civil Action **NOTICE OF SUGGESTION OF BANKRUPTCY**

PLEASE TAKE NOTICE THAT on April 30, 2009 (the "Petition Date"), Chrysler LLC ("Chrysler") and certain domestic direct and indirect subsidiaries (the "Debtors"), filed a voluntary petition for relief in the United States Bankruptcy Court for the Southern District of New York (the "Bankruptcy Court") under chapter 11 of title 11 of the United States Code (the "Bankruptcy Code"), which is being jointly administered and which is pending before the Honorable Arthur J. Gonzalez as Case No. 09-50002 (AJG).

CORPORATION & A LIMITED LIABILITY COMPANY
ATTORNEYS AT LAW

PLEASE TAKE FURTHER NOTICE THAT, in accordance with the automatic stay imposed by operation of section 362 of the Bankruptcy Code, from and after the Petition Date no cause of action arising prior to, or relating to the period prior to, the Petition Date, including this action, may be commenced or prosecuted against the Debtors including Chrysler LLC, improperly plead as DaimlerChrysler Corporation a/k/a Chrysler Corporation, in this civil action, and no related judgment may be entered or enforced against the Debtors outside of the Bankruptcy Court without the Bankruptcy Court first issuing an order lifting or modifying the automatic stay for such specific purpose.

Dated: May 1, 2009

HANLON BOGLIOLI & HANLON, PC
Attorneys for Defendant Chrysler LLC, improperly plead as DaimlerChrysler Corporation a/k/a Chrysler Corporation

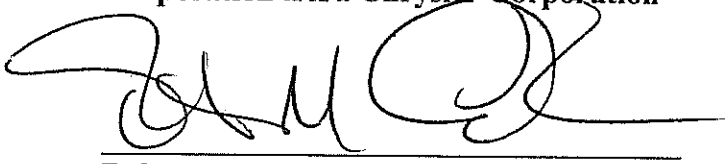

Robert M. Cook, Esq.

ATTORNEYS AT LAW
CORPORATION A LIMITED LIABILITY COMPANY

Attachment 5

Founded in 1852
by Sidney Davy Miller

MILLER CANFIELD

MICHIGAN: Ann Arbor
Detroit • Grand Rapids
Kalamazoo • Lansing
Saginaw • Troy
FLORIDA: Naples
ILLINOIS: Chicago
NEW YORK: New York
OHIO: Cincinnati
CANADA: Toronto • Windsor
CHINA: Shanghai
MEXICO: Monterrey
POLAND: Gdynia
Warsaw • Wroclaw

M. SHEILA JEFFREY
TEL (734) 668-7797
FAX (734) 747-7147
E-MAIL jeffrey@millercanfield.com

Miller, Canfield, Paddock and Stone, P.L.C.
101 North Main Street, Seventh Floor
Ann Arbor, Michigan 48104
TEL (734) 663-2445
FAX (734) 747-7147
www.millercanfield.com

May 5, 2010

VIA FACSIMILE (973) 243-2095 AND FEDERAL EXPRESS
Angel M. DeFilippo, Esq.
Grieco, Oates & DeFilippo, LLC
414 Eagle Rock Avenue, Suite 200
West Orange, New Jersey 07052

Re: Kline (Thomas, et al.) v. Chrysler Corporation, et al.

Dear Ms. DeFilippo:

My firm is discovery counsel for Chrysler Group LLC, which is the custodian of records for Old Carco LLC (f/k/a Chrysler LLC). I am in receipt of the subpoena you served on Chrysler Group LLC. I note that the Notice of Deposition is dated March 10, 2010 and the Order Issuing Subpoena is dated April 2, 2010. However, Chrysler Group LLC was not served with the subpoena until April 28, 2010.

The subpoena directs Chrysler Group LLC either to provide a witness for a records deposition on May 7, 2010 or produce the requested documents prior to May 7, 2010. Because of the belated service of the subpoena, and the voluminous documents sought therein, Chrysler Group LLC is unable either to produce a witness or the documents on May 7, 2010. Chrysler Group LLC will provide responses and objections to the discovery requests appended to the subpoena by May 7, however.

Assuming an appropriate protective order is entered, Chrysler Group LLC will produce the documents by May 28, 2010. Almost all the documents you are seeking contain confidential commercial information. As such, Chrysler Group LLC will not produce these documents without a protective order in place. I will forward a proposed protective order to you with the discovery responses.

Please do not hesitate to contact me if you have any questions.

Sincerely yours,

By: _____
M. Sheila Jeffrey
Attorney at Law

MSJ/wsb
cc: Courtney E. Morgan, Jr., Esq. – Via Facsimile (313) 961-8178 and Federal Express
17,944,035.1\142778-00081

Founded in 1852
by Sidney Davy Miller

MILLER CANFIELD

M. SHEILA JEFFREY
TEL (734) 668-7797
FAX (734) 747-7147
E-MAIL jeffrey@millercanfield.com

Miller, Canfield, Paddock and Stone, P.L.C.
101 North Main Street, Seventh Floor
Ann Arbor, Michigan 48104
TEL (734) 663-2445
FAX (734) 747-7147
www.millercanfield.com

MICHIGAN: Ann Arbor
Detroit • Grand Rapids
Kalamazoo • Lansing
Saginaw • Troy
FLORIDA: Naples
ILLINOIS: Chicago
NEW YORK: New York
OHIO: Cincinnati
CANADA: Toronto • Windsor
CHINA: Shanghai
MEXICO: Monterrey
POLAND: Gdynia
Warsaw • Wrocław

May 5, 2010

VIA FACSIMILE (973) 243-2095 AND FEDERAL EXPRESS
Angel M. DeFilippo, Esq.
Grieco, Oates & DeFilippo, LLC
414 Eagle Rock Avenue, Suite 200
West Orange, New Jersey 07052

Re: Kline (Thomas, et al.) v. Chrysler Corporation, et al.

Dear Ms. DeFilippo:

My firm is discovery counsel for Chrysler Group LLC, which is the custodian of records for Old Carco LLC (f/k/a Chrysler LLC). I am in receipt of the subpoena you served on Chrysler Group LLC. I note that the Notice of Deposition is dated March 10, 2010 and the Order Issuing Subpoena is dated April 2, 2010. However, Chrysler Group LLC was not served with the subpoena until April 28, 2010.

The subpoena directs Chrysler Group LLC either to provide a witness for a records deposition on May 7, 2010 or produce the requested documents prior to May 7, 2010. Because of the belated service of the subpoena, and the voluminous documents sought therein, Chrysler Group LLC is unable either to produce a witness or the documents on May 7, 2010. Chrysler Group LLC will provide responses and objections to the discovery requests appended to the subpoena by May 7, however.

Assuming an appropriate protective order is entered, Chrysler Group LLC will produce the documents by May 28, 2010. Almost all the documents you are seeking contain confidential commercial information. As such, Chrysler Group LLC will not produce these documents without a protective order in place. I will forward a proposed protective order to you with the discovery responses.

Please do not hesitate to contact me if you have any questions.

Sincerely yours,

By: M. Sheila Jeffrey
M. Sheila Jeffrey
Attorney at Law

MSJ/wsb
cc: Courtney E. Morgan, Jr., Esq. – Via Facsimile (313) 961-8178 and Federal Express
17,944,035.1\142778-00081

Founded in 1852
by Sidney Davy Miller

MILLER CANFIELD

MICHIGAN: Ann Arbor
Detroit • Grand Rapids
Kalamazoo • Lansing
Saginaw • Troy
FLORIDA: Naples
ILLINOIS: Chicago
NEW YORK: New York
OHIO: Cincinnati
CANADA: Toronto • Windsor
CHINA: Shanghai
MEXICO: Monterrey
POLAND: Gdynia
Warsaw • Wroclaw

M. SHEILA JEFFREY
TEL (734) 668-7797
FAX (734) 747-7147
E-MAIL Jeffrey@millercanfield.com

Miller, Canfield, Paddock and Stone, P.L.C.
101 North Main Street, Seventh Floor
Ann Arbor, Michigan 48104
TEL (734) 663-2445
FAX (734) 747-7147
www.millercanfield.com

RECEIVED
MAY 06 2010
MORGAN & MEYERS, PLC

May 5, 2010

VIA FACSIMILE (973) 243-2095 AND FEDERAL EXPRESS
Angel M. DeFilippo, Esq.
Gricco, Oates & DeFilippo, LLC
414 Eagle Rock Avenue, Suite 200
West Orange, New Jersey 07052

Re: Kline (Thomas, et al.) v. Chrysler Corporation, et al.

Dear Ms. DeFilippo:

My firm is discovery counsel for Chrysler Group LLC, which is the custodian of records for Old Carco LLC (f/k/a Chrysler LLC). I am in receipt of the subpoena you served on Chrysler Group LLC. I note that the Notice of Deposition is dated March 10, 2010 and the Order Issuing Subpoena is dated April 2, 2010. However, Chrysler Group LLC was not served with the subpoena until April 28, 2010.

The subpoena directs Chrysler Group LLC either to provide a witness for a records deposition on May 7, 2010 or produce the requested documents prior to May 7, 2010. Because of the belated service of the subpoena, and the voluminous documents sought therein, Chrysler Group LLC is unable either to produce a witness or the documents on May 7, 2010. Chrysler Group LLC will provide responses and objections to the discovery requests appended to the subpoena by May 7, however.

Assuming an appropriate protective order is entered, Chrysler Group LLC will produce the documents by May 28, 2010. Almost all the documents you are seeking contain confidential commercial information. As such, Chrysler Group LLC will not produce these documents without a protective order in place. I will forward a proposed protective order to you with the discovery responses.

Please do not hesitate to contact me if you have any questions.

Sincerely yours,

By: M. Sheila Jeffrey
M. Sheila Jeffrey
Attorney at Law

MSJ/wsb
cc: Courtney E. Morgan, Jr., Esq. – Via Facsimile (313) 961-8178 and Federal Express
17,944,035.1\142778-00081

Original - Return 1st copy - Witness 2nd copy - File 3rd co

STATE OF MICHIGAN
JUDICIAL DISTRICT
SIXTH JUDICIAL CIRCUIT
COUNTY PROBATE

SUBPOENA
Order to Appear and/or Produce

OAKLAND COUNTY 10-109074-CZ
JUDGE RAE LEE CHABOT
KLINE,THOMAS. v MORGANALCALA

Police Report No. (if applicable)

Court Address
1200 N. Telegraph Road, Dept. 404, Pontiac, MI 48341

Court telephone no.
248-858-1000

Plaintiff(s) Petitioner(s)		Defendant(s) Respondent(s)
☐ People of the State of Michigan ☒ IN RE THOMAS KLINE	V	VICTORIA MORGAN-ALCALA, et al
☒ Civil ☐ Criminal		Charge

☐ Probate In the matter of

In the Name of the People of the State of Michigan. TO:

NEW CARCO ACQUISITION LLC, a/k/a
NEW SCHRYSLER
30600 Telegraph, Suite 2345
Bingham Farms, MI 48025

If you require special accommodations to use the court because of disabilities, please contact the court immediately to make arrangements.

YOU ARE ORDERED:

☐ 1. to appear personally at the time and place stated below; You may be required to appear from time to time and day to day until excused.

☐ The court address above ☒ Other: 30600 Telegraph Road, Suite 2925, Bingham Farms, MI 48025

Day	Date	Time
Friday	May 7	9:00 a.m.

☐ 2. Testify at trial.

☒ 3. Produce/permit inspection or copying of the following items: See attached

☐ 4. Testify as to your assets, and bring with you the items listed in line 3 above.

☐ 5. Testify at deposition.

☐ 6. MCL 600.6104(2), 600.6116, or 600.6119 prohibition against transferring or disposing of property attached.

☐ 7. Other: **The requested items can be copied and mailed to Grieco, Oates & DeFilippo, LLC to meet the subpoena requirements.**

☐ 8.

Person requesting subpoena		Telephone no.
Courtney E. Morgan, Jr.		313-961-0130
Address		
3200 Greenfield, Suite 260		
City	State	Zip
Dearborn	MI	48120

NOTE: If requesting a debtor's examination under MCL 600.6110, or an injunction under item 6, this subpoena must be issued by a judge. For a debtor examination, the affidavit of debtor examination on the other side of this form must also be completed. Debtor's assets can also be discovered through MCR 2.305 without the need for an affidavit of debtor examination or issuance of this subpoena by a judge.

FAILURE TO OBEY THE COMMANDS OF THE SUBPOENA OR APPEAR AT THE STATED TIME AND PLACE MAY SUBJECT YOU TO PENALTY FOR CONTEMPT OF COURT.

April 22, 2010
Date

Judge/Clerk/Attorney Courtney E. Morgan, Jr. (P29137)

Court use only
☐ Served ☐ Not Served

MC 11 (6/99) SUBPOENA, Order to Appear and/or Produce

MCL 600.1455, 600.1701, 600.6110, 600.6119;

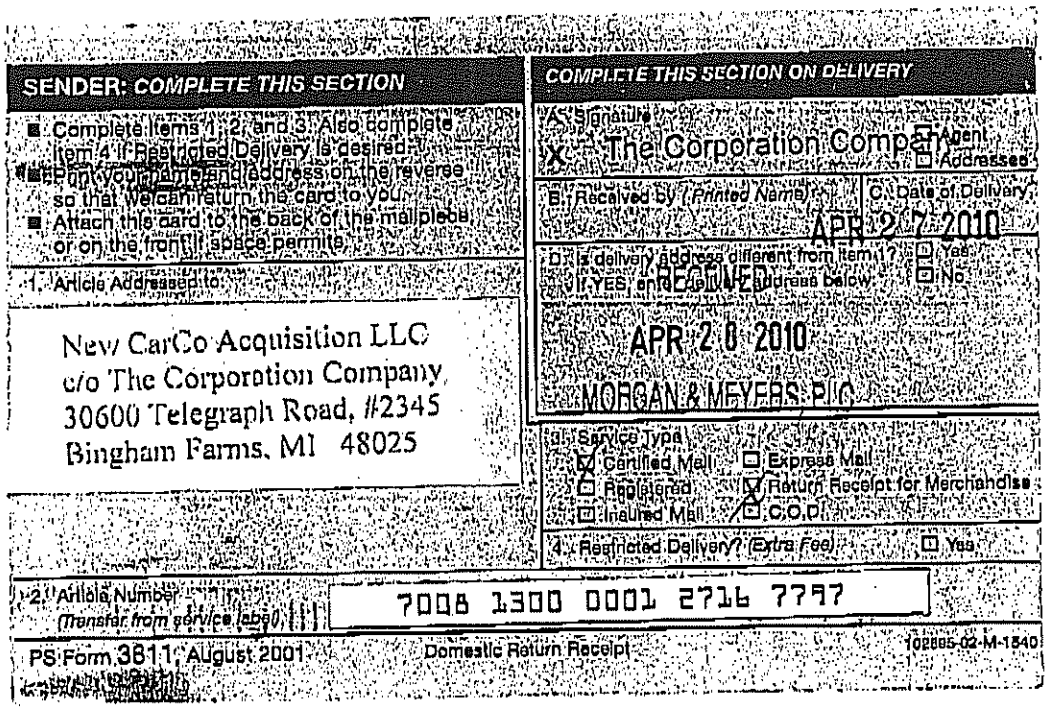

SENDER: COMPLETE THIS SECTION

- Complete items 1, 2, and 3. Also complete item 4 if Restricted Delivery is desired.
- Print your name and address on the reverse so that we can return the card to you.
- Attach this card to the back of the mailpiece, or on the front if space permits.

1. Article Addressed to:

New CarCo Acquisition LLC
c/o The Corporation Company
30600 Telegraph Road, #2345
Bingham Farms, MI 48025

COMPLETE THIS SECTION ON DELIVERY

A. Signature
X The Corporation Company ☐ Agent ☐ Addressee

B. Received by (Printed Name) | C. Date of Delivery
APR 27 2010

D. Is delivery address different from item 1? ☐ Yes
If YES, enter delivery address below: ☐ No

RECEIVED
APR 26 2010
MORGAN & MEYERS, PLC

3. Service Type
☑ Certified Mail ☐ Express Mail
☐ Registered ☑ Return Receipt for Merchandise
☐ Insured Mail ☐ C.O.D.

4. Restricted Delivery? (Extra Fee) ☐ Yes

2. Article Number (Transfer from service label) 7008 1300 0001 2716 7797

PS Form 3811, August 2001 Domestic Return Receipt 102595-02-M-1540

End of Document

ATTACHMENT K

EXPERT WITNESS REPORT - 2 January 2012 REVISION

Kline v. Loman Auto Group, Victoria Morgan-Alcala, et al.

Page Range 6

Pages 607 - 612

22357 Columbia Street
Dearborn, MI 48124
313-277-5095
pvsheridan@comcast.net

28 September 2010 BY EMAIL AND FEDEX GROUND

Ms. Angel M. DeFilippo, Esq.
Grieco Oates & DeFilippo, LLC
414 Eagle Rock Avenue
West Orange, NJ 07052
973-243-2099

Subject: **Document Reliance/Review Report :**
Expert Witness Report-Preliminary, November 30, 2009

Reference: **Estate of Susan Morris Kline v. Chrysler LLC, Loman Auto Group, et al.**

Dear Ms. DeFilippo:

Per you request I am attaching a 'Document Reliance/Review Report' which summarizes those documents that I relied upon, reviewed or was familiar-with prior to submitting my 'Expert Witness Report - Preliminary,' dated November 30, 2009.

Specifically, I am also responding to the follow-up email sent to me by Ms. Karen Feldman on Friday, September 17, 2010 at 12:47 pm, which forwarded the following request wording from defense counsel:

"Identify all documents reviewed or otherwise relied upon in preparing your November 30, 2009 report."

Please do not hesitate to contact me at any time.

Respectfully yours,

Paul V. Sheridan

Attachment

cc: Karen R. Feldman
Neil Hannemann
Courtney E. Morgan, Esq.
Donald R. Phillips, PE

Paul V. Sheridan Expert Witness Report – Preliminary
Estate of Susan Morris Kline v. Chrysler, Loman Auto Group, et al.

Document Reliance/Review Report (Five Pages)

1993 through1996 Jeep Grand Cherokee service manuals.

1999 through 2004 Jeep Grand Cherokee service manuals.

2005 through 2009 Jeep Grand Cherokee service manuals.

1998 through 2009 Dodge Durango service manuals.

1991 through 2008 Ford Explorer service manuals.

1992 through 2008 Ford Crown Victoria, Mercury Grand Marquis and Lincoln Town Car service manuals.

1991 through 1999 Subaru Legacy service manuals.

1998 through 2004 Mercedes-Benz M-Class SUV service manuals.

Various editions of MOPAR Expressions magazine.

MOPAR Accessories dealership catalogs for the ZJ version of the Jeep Grand Cherokee.

Court filings, court orders, court transcripts, and legal correspondence, etc. relating to the litigation of Kline v Chrysler LLC, Loman Auto Group, et al., that occurred/existed through November 30, 2010.

Police traffic accident report of February 24, 2007 (Susan V. Morris-Kline, et al.).

Chrysler Truck Dealer Visit Program, 1986 Phase 1 Summary report.

Court filings, court orders, court transcripts, and legal correspondence, etc. relating to the litigation of Chrysler v. Sheridan

Court filings, court orders, court transcripts, and legal correspondence, etc. relating to the litigation of Sheridan v. Chrysler.

Gala invitation sent by Mr. Lewis H. Goldfarb (formerly Chrysler and DaimlerChrysler lead product liability attorney) from his employer, defense firm Fulbright Center Hogan & Hartson L.L.P., regarding (former Chrysler and DaimlerChrysler product liability attorney) Ms. Jackie Glassman appointment as 'Chief Counsel of the National Highway Traffic Safety Administration'

Court filings, court orders, court transcripts, and legal correspondence, etc. relating to the litigation of Gillespie v. DaimlerChrysler, et al.

Court filings, court orders, court transcripts, and legal correspondence, etc. relating to the litigation of Mohr v. DaimlerChrysler, et al., including but not limited to Court of Appeals in Tennessee at Jackson ruling of October 14, 2008, # W2006-01382-COA-R3-CV.

Court filings, court orders, court transcripts, and legal correspondence, etc. and various news media reports relating to the calendar-year 2009 bankruptcy filings and government bailout of Chrysler LLC.

All Safety Leadership Team (SLT) documents and file materials created during the time period January 27, 1993 through November 3/November 7, 1994.

File documents contained in the Chrysler office of Paul V. Sheridan on December 16, 1994 (e.g. Baker to Sinclair memo of August 24, 1978, Chrysler 'Fuel Supply System Design Guidelines.' FMVSS-301 file, 'Rear Crash Survivability – General,' etc.).

NHTSA Federal Motor Vehicle Safety Standard 301 (FMVSS-301) "Fuel System Integrity" documents and reports.

Fire & Materials Communication "Human Survivability in Motor Vehicle Fires" by Digges, Gann, Grayson, et al., dated December 7, 2007.

Photographs taken on April 1 and 2, 2009 at the vehicle inspection of same dates of the 1996 Jeep Grand Cherokee formerly driven by Susan Morris-Kline.

Chrysler Personnel Office 'Employee Performance Appraisal' for Paul V. Sheridan of 1991.

Attachments A through G to my report entitled 'Expert Witness Report – Preliminary,' dated November 30, 2009.

Jeep-Truck Engineering (JTE) organizations charts dated from approximately September 1987 through December 1990.

1996 Dodge Caravan dealership/sales brochure.

Various Jeep-Truck Engineering (JTE) 'Engineering Program Review Summary' reports.

SAE International paper, "A Research Program of Crash Induced Fire Safety" by Digges, Stephenson and Bedewi, #2004-01-0475.

DaimlerChrysler "Safety Recall No. A10 – Fuel Tank Blocker Bracket."

Correspondence between Chrysler counsel and Muth Technologies.

Deposition transcript of Francois J. Castaing of May 19, 1999.

Deposition transcript of Francois J. Castaing of March 14, 1996.

Deposition transcript of Gregory J. Ridella of November 11, 1996.

Deposition transcript of Robert Eaton of January 24, 2001.

Deposition transcript of Judson B. Estes of May 26, 2005.

Deposition transcript of Judson B. Estes of May 27, 2005.

Deposition transcript of Robert D. Banta of July 31, 2007.

Deposition transcript of Stephen D. Lazarus of May 26, 2005.

Sworn affidavit of John M. Fonger of March 22, 1995.

Correspondence of November 22, 2002 from Madeleine Johnson, Esq. to Mr. Dennis Ross, Esq.

Correspondence of December 28, 1994 from Gregory J. Ridella, Esq. to Michael L. Pitt, Esq.

Correspondence of January 5, 1995 from Joseph J. Trotta to Paul V. Sheridan.

Correspondence of March 29, 1995 from Michael Mattei, Blue Cross-Blue Shield, to Paul V. Sheridan.

Automotive News article dated November 12, 2001 entitled, “Lutz’s Supplier Side.”

Chrysler Corporation presentation by Tom Sidlik, Executive Vice President – Procurement & Supply, dated 1999 (approximate) regarding the ‘Chrysler Extended Enterprise™.’

Presentation Discussion Materials Regarding Project Blitz’ authored by Goldman-Sachs International on October 4, 1995.

Presentation ‘Project Blitz: Discussion Materials for Meeting with Dr. Eckhard Cordes’ authored by Goldman-Sachs International on August 9, 1997.

Court filings, court orders, court transcripts, and numerous news reports, etc. relating to the litigation of Kerkorian v DaimlerChrysler.

Correspondence of July 20, 1995 from Dale E. Dawkins to Ronald R. Boltz and Francois L. Castaing, and openly copied to Thomas G. Denomme and Lewis H. Goldfarb.

Correspondence of June 14, 1999 from Jamie F. Jameson to ‘All Sales and Marketing Operations Personnel’ relating to subject ‘June 8 - Global Sales and Marketing Meeting.’

Meeting minutes of the Laminated Side Glass Task Force dated June 30, 1998.

Meeting minutes of the Laminated Side Glass Task Force dated July 16, 1998.

Reference Manual for 'Potential Failure Mode and Effects Analysis (FMEA),' originally issued 1993, revised 1995, authored by engineering representatives from Chrysler Corporation, Ford Motor Company, and General Motors.

Ford Motor Company Service Parts Division Service Procedure #01-21-14.

Various aftermarket promotional sales and technical materials relating to availability of Jeep fuel tank skid plates.

Florida Traffic Crash Report Long Form #76967425, dated 10/11/2007.

Florida Highway Patrol Traffic Homicide 'Field Notes' by Corporal David Krantz, #FHP707-64-031, dated 10/11/2007.

Ford Motor Company Service Instruction for 'Optional Upgrade Kit,' #SK3W73-19G376-AA.

Ford Motor Company correspondence of September 2005 from Frank M. Ligon, Director of Ford Service Engineering Operations, to couch, taxi and transportation services companies.

Correspondence of June 14, 1991 from D. M. Patrick, Manager of Technical Cost Planning, to Ronald R. Boltz, Francois J. Castaing, Robert A. Lutz, et al, relating to competitive vehicle teardown studies.

2002 study entitled, 'The Daimler Chrysler Merger,' by the Tuck School of Business at Dartmouth College Professor Sydney Finkelstein, # 1-0071.

1999 publication by Mitchell International entitled, 'Body Builder's Frame Guide.'

Chrysler dealer screenshot of DealerConnect for "XEE" option code content and applications listing.

Correspondence of April 24, 2009 from Chuck Eddy, NADA Representative to the Chrysler National Dealer Council, Jim Arrigo, Co-Chair, Chrysler National Dealer Council, Hayden Elder, Co-Chair, Chrysler National Dealer Council, Andrew Koblenz and James Moors, National Automobile Dealers Association, to "All Chrysler Dealers."

2008 edition of National Automobile Dealers Association 'Code of Ethics.'

2008 edition of National Automobile Dealers Association 'Ethics Guide.'

National Highway Traffic Safety Administration (NHTSA) 'Trip Report' of May 10, 1995, interview of Paul V. Sheridan.

Correspondence from Coleman R. Sachs, Esq., NHTSA Staff Attorney, to Paul V. Sheridan, dated December 10, 1996.

Various correspondence from Chrysler outside suppliers regarding 'Federal Motor Vehicle Safety Standards – Compliance Submissions.'

Correspondence from Mikal C. Watts, Esq. to Thomas Kienbaum, Esq., dated March 24, 2000.

Various website pages of the Loman Auto Group circa May 2009.

Court order issued by the State Court of Gwinnett County, State of Georgia, in the litigation of Dize v DaimlerChrysler, dated December 3, 2001.

Chrysler Corporation Engineering Standard 'PS-7000: Outside Designed and Developed Items (ODD Box Items) Abstract,' originally issued on October 25, 1979, revised June 26, 1995.

1984, 1985, 1986, 1987, 1990 and 1991 editions of the Dodge 'Engineering Book of Knowledge' (EBOK).

Chrysler Corporation Honda Study Team report entitled, 'Honda Study – Phase III,' dated February 1, 1988.

Chrysler Corporation report entitled, 'Introduction to ABC/ABM and Review Status of ABC at Chrysler – Corporate Training Class,' dated November 1992.

Chrysler Corporation report entitled, 'Corporate Business Group Charter,' dated February 28, 1985.

Chrysler Technical Architecture Questionnaire #SP7DFD-0600 entitled, 'CAIR Mirror Server for Legal Discovery,' dated September 13, 1999.

Customer Assistance Inquiry Request (CAIR) definitions page authored by Peter Edghill, dated October 9, 2000.

DaimlerChrysler Quality Management System Procedure document # NCROP-001, revision #4, dated November 24, 1997.

DaimlerChrysler Quality Management System Procedure document # NCROP-004, revision #4, dated November 24, 1997.

Paul V. Sheridan
September 28, 2010

ATTACHMENT L *

EXPERT WITNESS REPORT - 2 January 2012 REVISION

Kline v. Loman Auto Group, Victoria Morgan-Alcala, et al.

Page Range 0

* Please see Video file folder “Attachment L”

ATTACHMENT M

EXPERT WITNESS REPORT - 2 January 2012 REVISION

Kline v. Loman Auto Group, Victoria Morgan-Alcala, et al.

Page Range 7

Pages 615 - 621

Inter Company Correspondence

Telephone

Date 12/14/87

To — Name & Department

CIMS Number

Jeep & Truck Engineering

From — Name & Department

CIMS Number

F. J. Castaing

Subject: Organization Charts

Attached is a complete set of organization charts for Jeep & Truck Engineering.

F. J. Castaing

Δπ EXHIBIT 1
Deponent Castaing
Date 6-14-11 Rptr. Jad
WWW.DEPOBOOK.COM

JEEP AND TRUCK ENGINEERING
DECEMBER 14, 1987

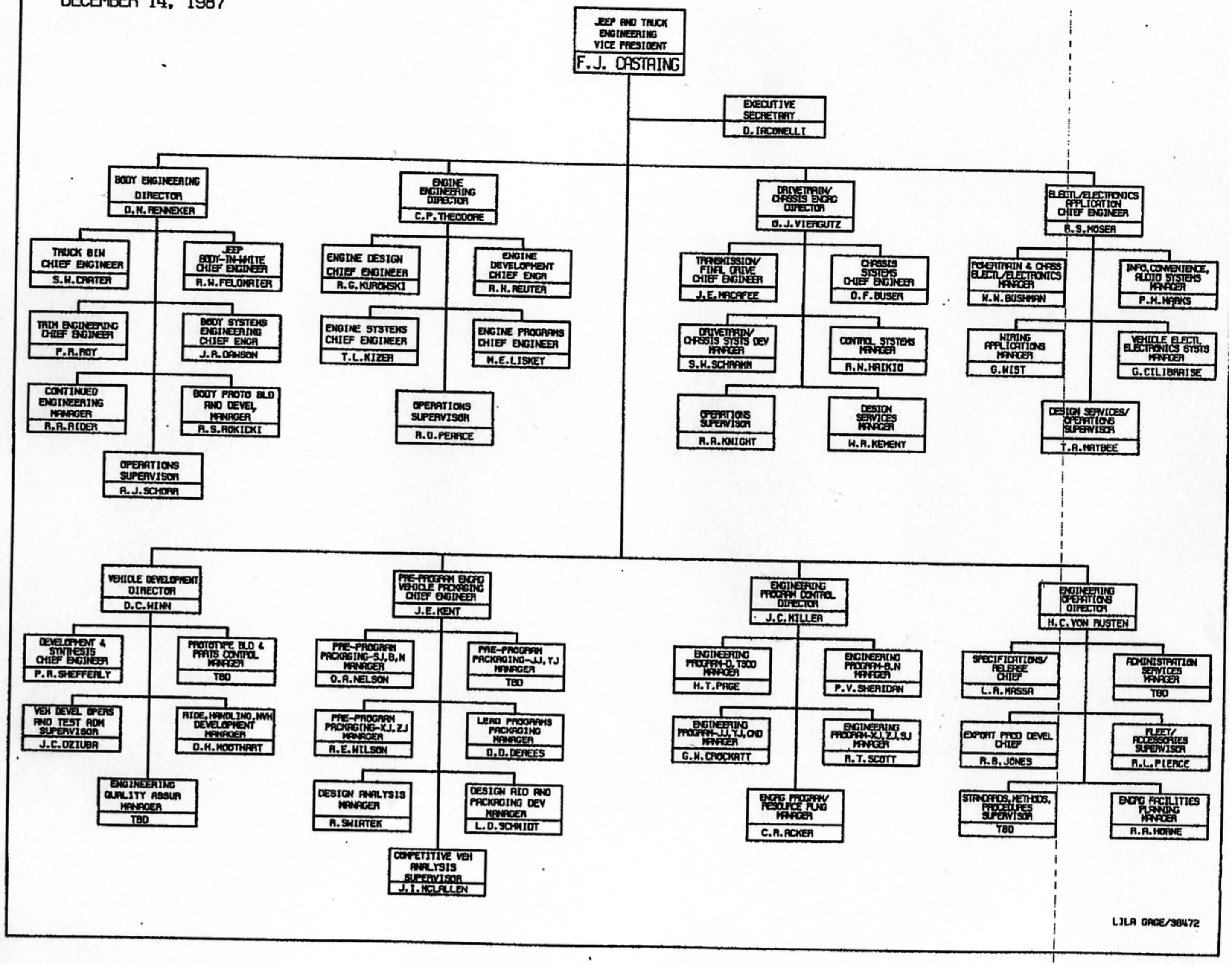

ENGINEERING PROGRAM CONTROL
DECEMBER 14, 1987

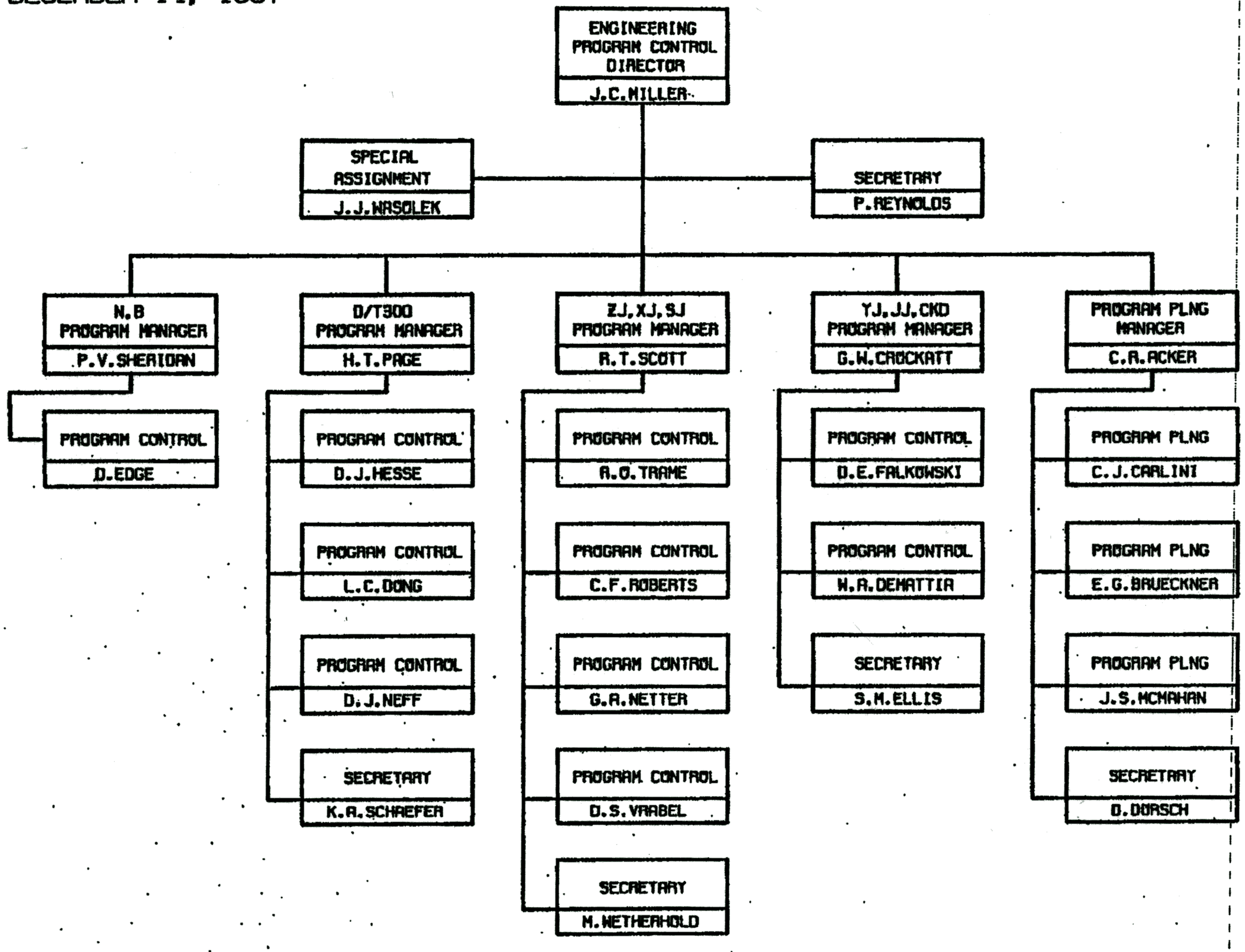

LILR GAGE/38472

DRIVETRAIN/CHASSIS ENGINEERING
DECEMBER 14, 1987

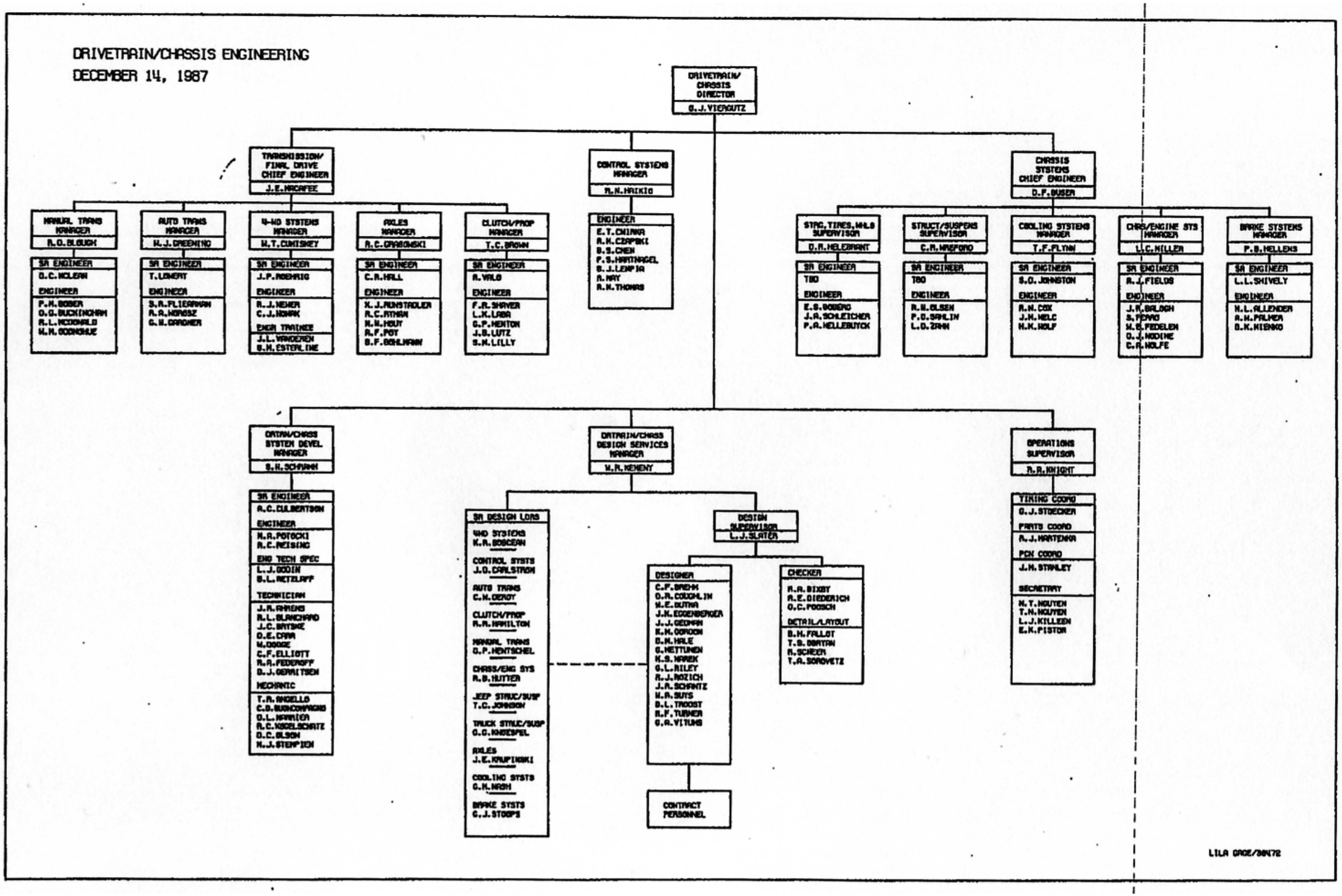

LILA GAGE/38472

BODY ENGINEERING
DECEMBER 14, 1987

- BODY/ELECTRICAL DIRECTOR — D.N.RENNEKER
  - SECRETARY — D.L.HODGES
  - TRIM ENGINEERING CHIEF ENGINEER — P.R.ROT
    - INSTRUMENT PANEL MANAGER — T.R.CENCER
      - SR ENGR JEEP — M.G.FORKER
      - ENGR N-TRUCK — D.BAILEY
      - ENGR B & D — T.ROSE
      - DESIGN SUPV — J.J.SERGE
        - DESIGNER — A.R.KIRBY; W.R.BELKOWSKI
    - SEAT/RESTRAINT SUPERVISOR — L.W.BELL
      - DES/DEV SPEC-SEATS — R.W.RUSSELL
      - DES/DEV SPEC-RESTR — D.R.DORROW
      - DESIGN SUPV — D.W.GLOVAK
      - DESIGN SUPV — L.R.KING
        - DESIGNER — L.R.COX; F.D.RIDER
    - JEEP AND LEAD TRIM MANAGER — D.C.SAUVE
      - ENGINEER — M.E.KALUSZKA
      - DES DEV SPEC-LEAD — H.D.BOWERS
      - DESIGN SUPV — R.J.MACERI
        - DESIGNER — D.E.EGGERT; M.T.CARLOS; P.E.CLOUTIER; S.B.PERRY
    - TRUCK TRIM/CARGO SUPERVISOR — D.JONES
      - ENGINEER N — W.KNIGHT
      - ENGINEER B,D — R.SEBASTIAN
      - DESIGN SUPV — P.VOGHT
  - CONTINUED ENGRG MANAGER — R.A.RIDER
    - SECRETARY — G.A.FUJA
    - INTL CONTD ENGRG SUPERVISOR — D.E.HIGLEY
      - ENGINEER — G.R.OLSZEWSKI; TBD
      - JEEP CONTD ENGRG SUPERVISOR — G.J.TARIAN
        - SR DESIGNER — R.J.BRUMAN; F.R.DRUGARD; J.R.SPARGOS
    - DESIGN SERVICES SUPERVISOR — R.P.AUDETTE
      - DETAILING DAYS SUPERVISOR — L.J.OSENKOWSKI; CHECKER — P.J.STARK
      - DETAILING NITES SUPERVISOR — E.J.RAMIREZ; CHECKER — F.MCCONKEY
      - DESIGN SECTION SUPERVISOR — R.S.LAWRENCE
  - OPERATIONS SUPERVISOR — R.J.SCHORR
    - PRD/PROD,PLN,ROM — J.A.GILBERT; PROG COST,RES PLN — P.A.ENDRASIK; PROT PRTS COOR — H.J.WEGRECKI; PROD CHG COORD — P.STOOPS; DATA INPUT SPEC — S.M.SCHULTE
  - DODGE TRUCK BIW CHIEF ENGINEER — S.W.CRATER
    - OPERATIONS — W.WILKIALIS
    - PU CAB,DR,SEALING SUPERVISOR — R.P.EMRICH
      - SR ENGR-DR SYSTS — G.T.BUDZYN
      - ENGR-DR SYSTEM — M.J.DOLAN
      - SR ENGR-CAB LESS DR — S.A.BAGHDADI
        - ENGR-ROOF/CAB BK — L.J.CONRAD
        - ENGR-BODY SEALG — A.MOSAKOWSKI
    - FESM,BOX,BMPR,ORN SUPERVISOR — H.G.PRUETT
      - SR ENGR-FESM/BOX — F.W.HANSEN
      - ENGR-ENG COMPT — J.M.SUSKO; ENGR-HOOD/FEND — M.D.ABNEY; ENGR-CARGO BOX — E.J.WELD
      - SR ENGR-ORNAM — F.A.PARKINSON
        - ENGR-SIDE MLDGS — S.C.STABLE
        - ENGINEER-BMPRS — TBD
    - DETAIL & CHECK SUPERVISOR — J.T.PUSKAR
      - RELEASING SPEC — J.M.BECKNER
      - DESIGN SENIOR — J.T.SNOW
      - DODGE CONTD ENGRG SUPERVISOR — R.N.KILLENBERGER
        - SR ENGR-B-BODY — C.F.ROBERTS
        - ENGR-D BODY — C.A.BRINKERT
      - TRUCK BODY IN WHITE DESIGN SENIOR — TBD
  - JEEP BODY-IN-WHITE CHIEF ENGINEER — R.W.FELDMAIER
    - SECRETARY — S.M.CROMUS
    - BIW/EXTERIOR ORN MANAGER — D.W.WATSON
      - DESIGN SUPV — J.C.CLELAND; ENGINEER — TBD; SUPERVISOR — TBD; DESIGNER — R.F.GIORIO; B.J.HENDERSON; J.D.KILLEEN
    - CLOSURE PANELS MANAGER — F.A.GONDA
      - DESIGN SUPV — J.A.WOJTAK; TBD; ENGINEER — TBD; SUPERVISOR — TBD; DESIGNER — D.L.GARBER; D.W.GRACE; J.L.WILDMAN; D.F.HURD
    - UNDERBODY/BUMPERS SUPERVISOR — D.A.SPYTMAN
      - DESIGN SUPV — W.C.DOMBROWSKI; SR ENGINEER — TBD; TBD; DESIGNER — T.M.BARDLEY; H.J.COVEY; H.M.EHRISMAN
    - SEAL/GLAS/WELD/COR SUPERVISOR — R.A.PAYNE
      - DESIGN SUPV — P.R.CRETE; ENGINEER — D.C.SPARKER; ENGRG SPEC — C.E.BIALORUCKI; DESIGNER — C.D.BAKER; P.J.JANUS; D.L.DRAPER
  - BODY SYSTEMS ENGINEERING CHIEF ENGINEER — J.R.DAWSON
    - BODY HARDWARE MANAGER — TBD
      - SR ENGINEER — E.L.WATSON; ENGINEER — D.R.BRATOLD; S.D.LOGAN
      - DESIGN SUPV — P.P.KUJAWA; DESIGNER — H.R.HERSH
    - ELECTRO/MECHANICAL SYSTS MANAGER — Z.K.BARANOWSKI
      - ENGINEER — C.E.DIETRICH; A.E.JACKSON; M.MACGREGOR; TECHNICIAN — J.R.BROTHERS
    - BODY LIGHTING AND GRILLES MANAGER — L.L.WU
      - SR ENGINEER — J.L.PURPURA; ENGINEER — G.W.BUDD; L.R.GYENESE; TECHNICIAN — W.H.HOFFMAN
    - CLIMATE CONTROL MANAGER — L.K.MCDONALD
      - SR ENGINEER — J.S.RAHAIM; SPECIALIST — A.KARGILIS; ENGINEER — K.J.LABOE; TECHNICIAN — J.DRZECH; V.M.ZIEMBA
      - DESIGN SUPV — J.L.TOTH; DESIGNER — J.R.NETT; L.G.MONTFORD; C.J.GAGE
  - BODY PROTOTYPE BUILD & DEVEL MANAGER — R.S.ROKICKI
    - BODY DEVELOPMT PRODUCT SPEC — R.M.SCHOEN
    - BODY DEVELOPMT ENGINEER — TBD
    - LIVONIA PROTOTYPE BUILD FACILITY SUPERVISOR — D.GILCHRIST
      - SUPERVISOR — P.WISNOWSKI; METAL MOD MAKER — M.J.BIVINS; G.C.BURLESON; P.G.AUDETTE; J.D.GEBOSKI; J.B.TORNO
    - PROTO/FIXTURE PROCESSING SPEC — J.R.RADOMSKI

LILA GAGE/38472

VEHICLE DEVELOPMENT
DECEMBER 14, 1987

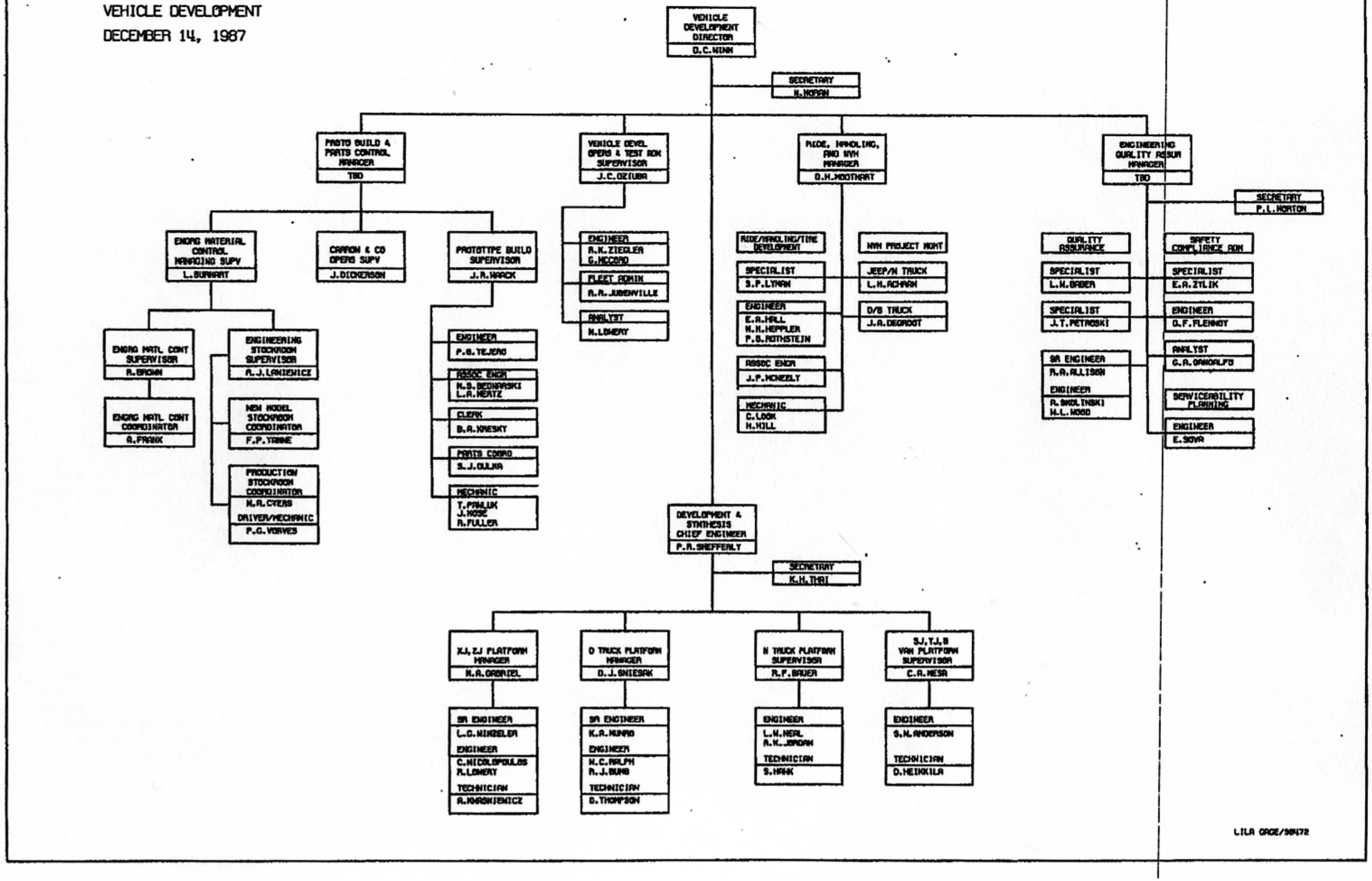

LILA CAGE/90472

PRE-PROGRAM ENGINEERING & VEHICLE PACKAGING
DECEMBER 14, 1987

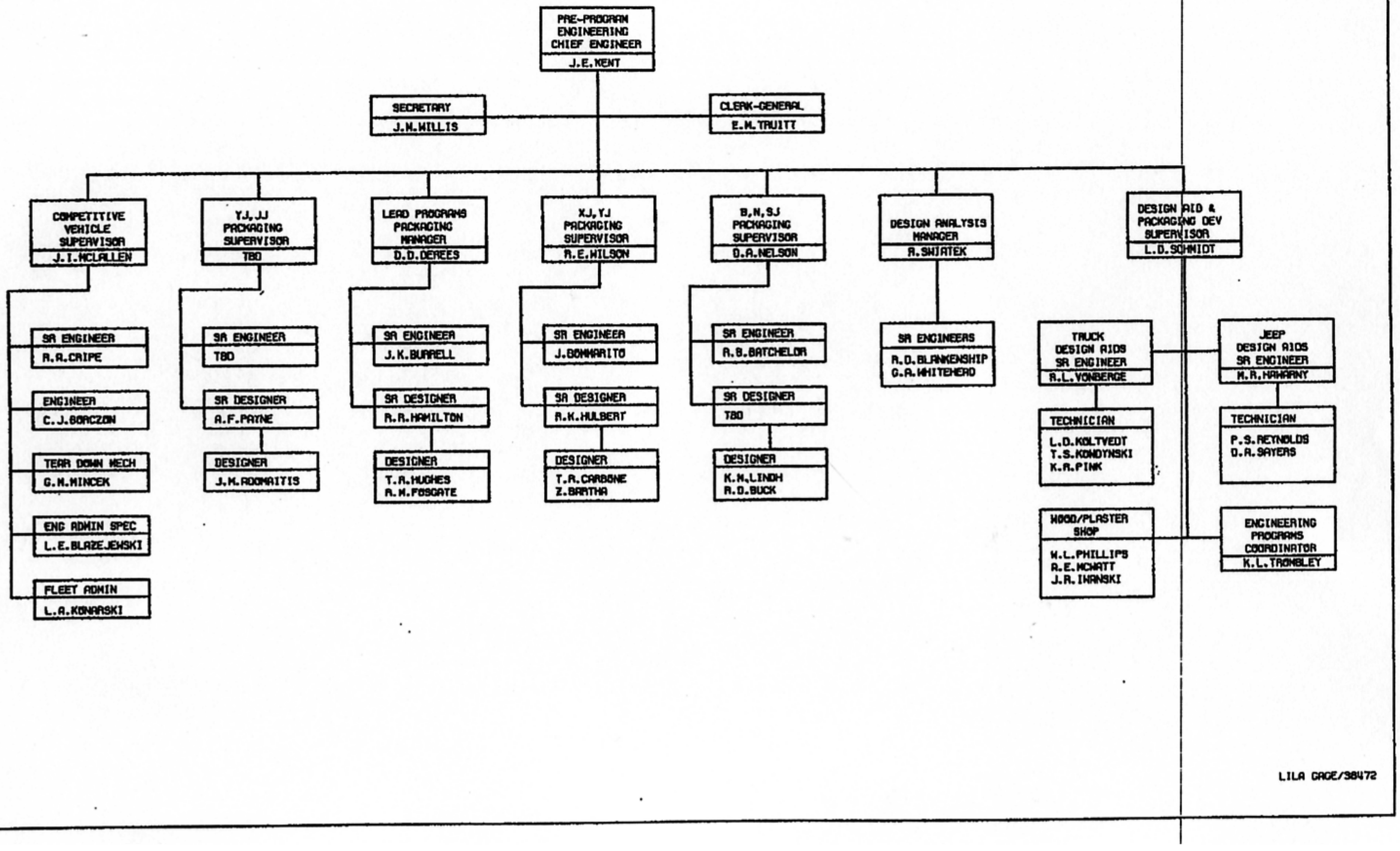

LILA CAGE/38472

ELECTRICAL/ELECTRONICS

DECEMBER 14, 1987

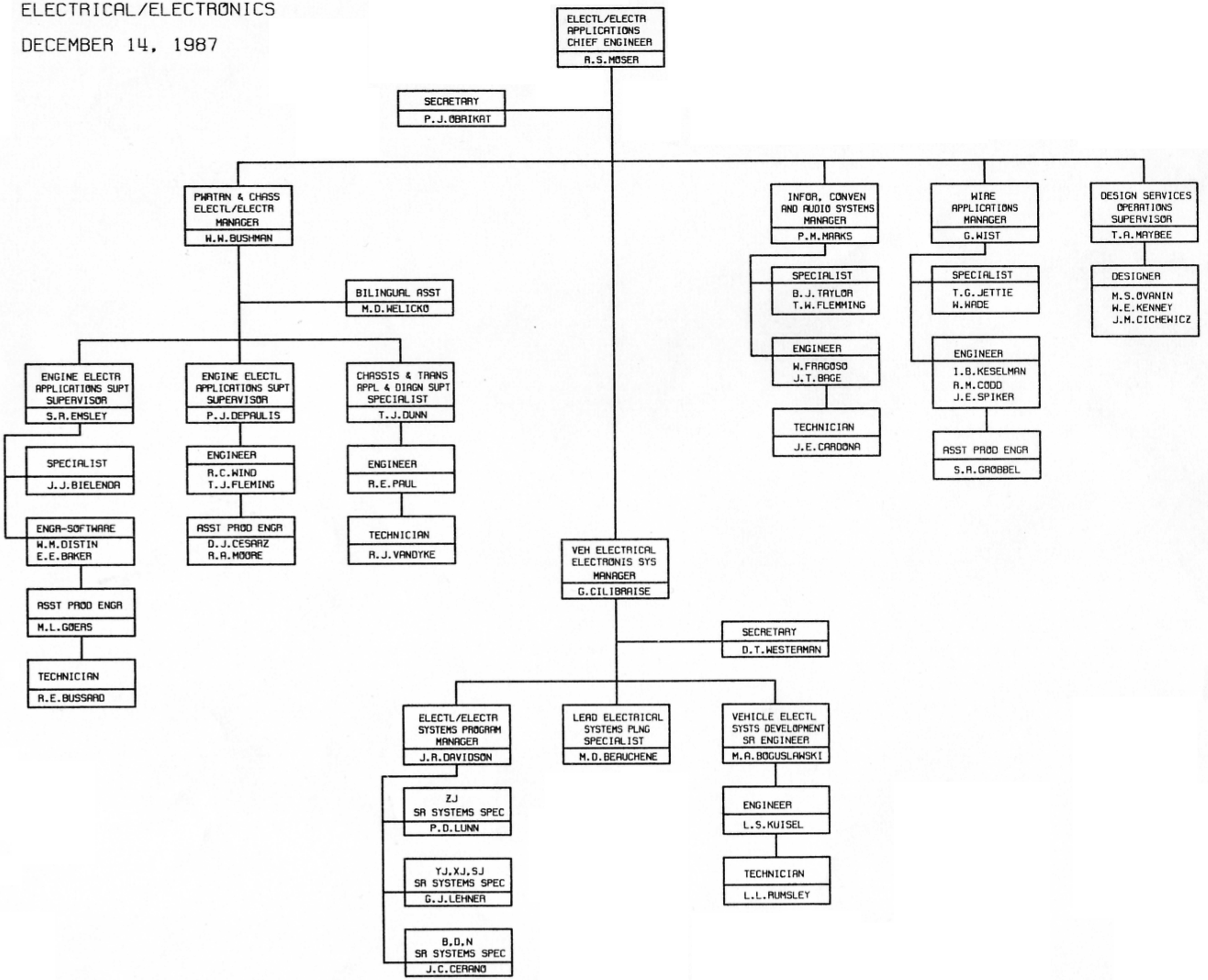

LILA GAGE/

ENGINE ENGINEERING

DECEMBER 14, 1987

- **ENGINE ENGINEERING DIRECTOR** — C.P.THEODORE
  - **SECRETARY** — D.J.WERNER
  - **ENGINE PROGRAMS CHIEF ENGINEER** — M.E.LISKEY
    - **PERF/FUEL EMIS** — R.D.VALO; J.M.SOWLE
    - **JEEP ENGINES PROGRAM MGMT** — R.G.LEIENDECKER
    - **DODGE ENGINE PROGRAM MGMT** — D.D.PERRINE
    - **EMISSIONS ENGRG MANAGER** — D.P.PELLERITO
      - **HEAVY DUTY** — L.W.FRITZ; G.B.MCCLAIN
      - **JEEP ENGINES** — C.S.SENKO
      - **IN-USE COMPLIANCE** — G.ENGLE
      - **DODGE ENGINE** — R.G.MADDOX
      - **CERT VEH MGMT SR TECHNICIAN** — J.G.COUCK
        - **ANALYST** — D.F.SCHAFF; W.A.RIEHL; B.LAZARUS
        - **PROJECT TECHN** — J.F.JOHNS
    - **VEHICLE ENGRG MANAGER** — R.L.KACZMAREK
      - **BUILD & DEVEL EMIS VEH SUP** — J.D.MATKOVICH
        - **SR MECHANIC** — J.P.FORTENER; H.G.BUSH; J.M.NAUTOKAS
        - **MECHANIC** — M.J.DEMART; D.M.CRAMPTON; M.A.HIGDON; L.D.JEDINAK; M.A.MCDONALD; M.A.SAYU; D.M.KOZAR; J.CRUDO; H.B.PITTS; J.D.SCHELL
      - **JEEP VEHICLE ENGINEER** — W.E.SAMMONS
      - **TRUCK VEHICLE ENGINEER** — F.H.DUPRAT
      - **PARTS FOLLOWUP** — J.A.DESMOND
    - **EMISSIONS TEST AND PLANNING MANAGER** — N.E.BAERMAN
      - **INSTRU EXH EMISSION SUPT** — A.A.MORRIS
        - **SR INST TECHN** — E.J.SCHLAPS; D.B.WILGUS
        - **INSTRU TECHN** — T.J.FAUL; W.W.CROWELL; R.D.MICHELL; T.K.PORTER
        - **MILEAGE ACCUM** — I.A.DURLIAN
        - **TEST ANALY/SCHED** — T.H.TOZER; T.A.BUDZINSKI
      - **EMISS TEST LAB SR TECHNICIAN** — R.H.BLIGHT; S.B.JEZUIT; J.T.DEANGELO
        - **TECHNICIAN** — G.A.BRODD; G.M.TRUDEAU; G.A.MILLER; D.E.KAARS; W.L.DAVIS; T.E.OPATICH; M.F.BYCZEK; R.J.VERHELLE; A.J.LARAT; D.M.ALDER; J.M.BIRES; S.W.DAVIS
  - **ENGINE SYSTEMS CHIEF ENGINEER** — T.L.KIZER
    - **ADV ENG SYST MANAGER** — D.D.ANDERSON
      - **PRIN ENGINEER** — J.M.FASI
      - **SR ENGINEER** — K.M.BARCHEL; G.W.WISZOWATY
      - **ENGINEER** — M.M.KOBETIS; M.R.KEVNICK
      - **ASSOC ENGINEER** — W.P.EICHBRECHT
    - **FUEL & EMISSION SYSTEMS DESIGN MANAGER** — S.R.BAUECKNER
      - **SR ENGINEER** — D.B.MARU
      - **LAB SUPERVISOR** — B.V.SANDERS
        - **TECHNICIAN** — B.L.MATHEWS; W.R.MCNEIL; G.F.NORMAN; T.L.SHELTON; M.D.NANNEY
      - **SR ENGINEER** — M.A.KASPER
      - **SR ENGINEER** — W.D.GORSUCH
      - **PRIN ENGINEER** — T.S.CHEEMA
        - **SR ENGINEER** — M.A.MCAFEE
        - **ENGINEER** — J.SAPAS
    - **JEEP & EMISSION SYSTEMS DEVEL MANAGER** — S.W.KENDALL
      - **SR ENGINEER** — A.J.MUIR; P.G.CUNIBERTI
      - **ENGINEER** — V.B.PATEL; J.V.SMITH
      - **ASSOC ENGR** — P.D.BREZINSKI; J.L.DOMBENKO
    - **TRUCK EMISSION SYSTEMS DEVEL MANAGER** — J.A.SANTIAGO
      - **ENGINEER** — A.C.ERWIN; S.D.LAZARUS; S.M.GLAZA; D.E.DOBAT; S.W.MCNEIL; TBD
      - **ASSOC ENGR** — P.J.GREGOR; D.E.WINKLER
  - **ENGINE DEVELOPMENT CHIEF ENGINEER** — R.H.REUTER
    - **ENGINE BUILD SUPERVISOR** — U.A.DONDRIO
      - **TECHNICIAN SPEC SR ENGINEER** — E.P.MAXWELL
        - **TECHNICIAN** — W.E.BLACK; F.W.JUERGENS; M.V.KRAMER; P.J.KUJAT; E.J.SEFTCHICK
      - **MACHINE SHOP** — S.A.SCHUSTER; A.A.KITZE; H.W.GENTNER
    - **POWERPLANT DEVELOPMENT MANAGER** — A.G.PIZZIMENTI
      - **DYNO DEVELOPMT ENGINEER** — S.L.VONFOERSTER
        - **DYNO DEVELOPMT ENGINEER** — A.L.DEBATES
          - **ENGR TECH SPEC** — A.A.MUDGE
            - **TECHNICIAN** — E.P.BERENDT; A.J.CERNIK
        - **DYNO DEVELOPMT ENGINEER** — S.J.GORGAS
          - **TECHNICIAN** — G.P.BRINKS; B.P.DOUGHER
      - **DYNO DEVELOPMT ENGINEER** — D.M.WEISS
        - **TECHNICIAN** — W.J.ROBERTZ; R.E.BASSETT
        - **DYNO DEVELOPMT ENGINEER** — M.K.WEHRLY
        - **DYNO DURABILITY ENGINEER** — J.D.SCOTT
          - **TECHNICIAN** — G.BATOR; J.D.MALEWICZ; D.W.MITCHELL
    - **FACILITIES ENGINEER** — C.S.ZIEMBA
      - **COMPUTER SPEC** — S.C.NELSON
      - **INSTRUMENTATION SUPERVISOR** — J.L.BAMBLETT
        - **INSTRU TECH** — N.ROMSTAD; D.D.THORNHILL
        - **AFTERNOON SHIFT DYNO SR TECHN** — A.M.YOUNG
          - **TECHNICIAN** — J.J.SELKMAN; D.C.BJARNESEN; S.MARTIN
    - **INSPECTION SUPERVISOR** — R.D.WAITE
      - **TECHNICIAN** — M.D.FRANCIS; M.J.HENDERSON; D.E.GRACZYK
      - **MIDNIGHT SHIFT DYNO SR TECHN** — R.J.FOX
        - **TECHNICIAN** — M.D.PODOLAN; T.C.BRANDON; D.S.PRICE
  - **ENGINE OPERATIONS** — A.D.PEARCE
    - **PROT PARTS COOR** — A.C.GOULD
      - **PROG TNG COOR** — E.J.PRINCO
      - **ENGRG CLERK** — B.K.RUMSLEY; N.L.WINGO; B.J.COOPER; D.I.MAXWELL; M.M.WILKINS
      - **BILINGUAL ASST** — C.M.FOLEY; M.S.REVAK
  - **BASE ENGINE DESIGN CHIEF ENGINEER** — R.G.KUROWSKI
    - **ENG ADPTATION MANAGER** — D.E.GARDNER
      - **PRIN ENGINEER** — C.H.BROWN; A.F.BARGENDE
        - **PROD ENGINEER** — A.N.NASSAR; M.A.JANOWSKI; W.C.SCHNEIDER; A.J.BUGLIONE; W.R.KRIEGER; B.P.MATTARELLA
    - **BASE ENG DESIGN MANAGER** — R.J.GREEN
      - **ENGRG SPEC** — J.J.FITZSIMONS; F.G.BUNTING
        - **PROD ENGINEER** — R.V.MCDONALD; R.G.WHEELER; J.K.MYDLARZ; J.WATERWORTH; J.C.LISABETH
    - **DESIGN SERVICES SUPERVISOR** — B.J.BEAUCHAMP
      - **SR DESIGNER** — TBD
        - **DESIGNER** — D.RUBEN; J.P.POKRYFKY; E.E.HANSEN; C.A.BEACH; G.B.THOMPSON
      - **SR DESIGNER** — C.A.KREMM
        - **DESIGNER** — M.D.TESAURO; G.A.HARRIS; R.K.BELANGER; L.F.PRICE; J.A.SOUSSE
      - **PRIN ENGINEER** — J.L.SOBOTA
        - **ECR PCN COORD** — C.S.KLEISMIT
        - **CAD COORD** — M.E.MUFNAGEL

LILA GAGE/38472

ATTACHMENT N *

EXPERT WITNESS REPORT - 2 January 2012 REVISION

Kline v. Loman Auto Group, Victoria Morgan-Alcala, et al.

Page Range 0

* Please see:

http://www.youtube.com/watch?v=zTdm_wj4AlY&feature=relmfu

or see Video file folder “Attachment N.”

ATTACHMENT O

EXPERT WITNESS REPORT - 2 January 2012 REVISION

Kline v. Loman Auto Group, Victoria Morgan-Alcala, et al.

Page Range 9

Pages 624 - 632

SUZUKI
XL-7
SUZUKI

MACSIMIZER

140526

MACSIMIZER
MAC TOOLS

XL-7
SUZUKI

ATTACHMENT P *

EXPERT WITNESS REPORT - 2 January 2012 REVISION

Kline v. Loman Auto Group, Victoria Morgan-Alcala, et al.

Page Range 0

Please see:

http://www.youtube.com/watch?v=Qs6S9p73VUo&feature=

or see Video file folder “Attachment P.”

ATTACHMENT Q

EXPERT WITNESS REPORT - 2 January 2012 REVISION

Kline v. Loman Auto Group, Victoria Morgan-Alcala, et al.

Page Range 1

Page 635

DDM
22357 Columbia Street
Dearborn, MI 48124-3431
313-277-5095
pvsheridan@comast.net

7 October 2010

Ms. Angel M. De Filippo, Esq.
Grieco, Oates & DeFilippo, LLC
Suite 200
414 Eagle Rock Avenue
West Orange, NY 07052
973-243-2099

Reference: ESTATE OF SUSAN MORRIS-KLINE, and THOMAS KLINE

Dear Ms. DeFilippo:

As promised I am enclosing sample pages of the Chrysler 'Engineering Book of Knowledge' (EBOK). These focus on the issue of fuel system design. Note that in the 1984 edition, published three years prior to the approval of the ZJ program, the following statement is included as part of a list of engineering features:

"All Dodges have fuel system features that provide protection against leakage during side, rear and angular front impacts. These features include sturdy fuel tank retention with longitudinal and lateral reinforcements, strong fuel tanks, reinforcements in the rear body structural members and a rollover valve at the top of the tank to prevent fuel leakage during a 180 degree rollover."

Note that in the 1987 edition, published in 1986 just prior to approval of the ZJ program, the statement above is essentially repeated, however it is embellished to include location (but again, this statement remains part of a list of engineering features):

"All Dodge models have fuel system features that provide protection against leakage during side, rear and angular front impacts, including: sturdy fuel tank construction, fuel tank retention with longitudinal and lateral reinforcements, a special valve on the top of the tank to prevent fuel leakage during rollover, reinforcements to the body structural members and, on all models except the rear-wheel drive Diplomat, the fuel tank is located forward of the rear suspension and between the body rails for extra protection."

With publication of the 1991 edition of EBOK (during the height of ZJ program development at Jeep-Truck Engineering, aka JTE), the issues of fuel system design/fuel tank location are no longer listed as engineering features; these are now listed as ***"Safety Features."*** Note that the revised location issue is specifically emphasized as being an engineering design response to *"the event the car is subjected to rear impacts."*

Respectfully,

Paul V. Sheridan

Enclosures

Cc: Courtney E. Morgan, Esq.

ATTACHMENT R *

EXPERT WITNESS REPORT - 2 January 2012 REVISION

Kline v. Loman Auto Group, Victoria Morgan-Alcala, et al.

Page Range 68

Pages 637 - 704

* Please also see Video file folder “Attachment R”

Jeep Grand Cherokee (ZJ)
Real-World / Underride Crash Test (and Report) - 16 May 2011

In April 2011 my expertise was solicited by Mr. Clarence Ditlow, Director for the Washington D.C. based Center for Auto Safety (CAS), regarding a planned real world crash test of a 1996 ZJ-Body Jeep Grand Cherokee fuel system. My role as representative for CAS also included confirmation of test vehicle (Jeep Grand Cherokee) condition as competent, representative and authentic for the stated test purpose(s).

The context of this crash test was the ongoing CAS petition, which is requesting a safety defect recall, which was originally submitted to the National Highway Traffic Safety Administration (NHTSA) under Defect Petition DP-09005 (Attachment G), which has been upgraded by NHTSA to Preliminary Evaluation PE-10031. The latter occurred subsequent to my meeting with NHTSA Administrator David L. Strickland in May 2010, and my submission to CAS of June 2010 (Attachment I).

The crash test occurred at the Karco Engineering, LLC facility in Adelanto, California, on Monday 16 May 2011 at approximately 11:30 am.

The crash test "bullet vehicle" was a Ford Taurus four-door sedan. As prior employee at Ford Motor Company, assigned to the Taurus program, I am very familiar with this vehicle configuration, and its ubiquitous real-world highway presence. The speed of the Taurus upon impact was 40mph.

Selected photos of my pre-test participation and post-test vehicle condition are sub-attached. Also sub-attached is the complete and official Karco Engineering test report of 6 June 2011.

As can be rendered from the sub-attachments, the ZJ-Body Jeep Grand Cherokee contains a fuel system that cannot protect passengers, and others, in a foreseeable real world rear crash scenario. This 16 May 2011 crash test demonstrated the well-known underride crash mode, wherein bumper mismatch facilitates direct impact to the unprotected fuel tank (please note my photos). The attached crash test video provides visual confirmation of this simple geometry:

http://www.youtube.com/watch?v=j0b6c-22_FM

The total time, from crash test impact to complete fuel tank emptying of all stoddard fluid (non-flammable liquid commonly used to simulate gasoline by automotive manufacturers and crash test facilities) was approximately/merely 90 seconds. It was at this time that I advised Mr. Ditlow that the customary post-crash rollover sequence required by FMVSS-301 protocol was pointless, therefore none was performed.

The ZJ Jeep Grand Cherokee fuel system failure in this test was utterly catastrophic from a safety point of view.

Memo: Note that Data Sheet 1of the sub-attached Karco Engineering test report describes the post-test condition of all ZJ-Body Jeep Grand Cherokee doors as "Jammed Shut."

P31079-01

EOS

TEST REPORT FOR:

The Center for Auto Safety

40 mph Vehicle to Vehicle 30% Offset Rear Impact

40 mph Vehicle to Vehicle 30% Offset Rear Impact

1996 Jeep Grand Cherokee Limited

1988 Ford Taurus

PREPARED FOR:

The Center for Auto Safety

1825 Connecticut Ave, NW

Washington, DC 20009

TEST REPORT NUMBER:

TR-P31070-01-A

TEST DATE:

May 16, 2011

REPORT DATE:

June 13, 2011

KARCO Engineering, LLC.
Automotive Research Center
9270 Holly Road
Adelanto CA 92301
Tel: (760) 246-1672
Fax: (760) 246-8112

KARCO Engineering compiled this publication for information gathering only. The findings and conclusions expressed in this publication are those of the authors and not necessarily those of any other organization. KARCO Engineering provides test services only and is not involved in consulting, product design or the manufacturing of any automotive products. KARCO does not warrant, supervise or monitor compliance of products or services except as specifically agreed to in writing. By their very nature, testing, analysis and other KARCO services are limited in scope and subject to expected measurement variability. No activity by KARCO Engineering can release a manufacturer from product or any other liability. The results, findings and conclusions expressed in this publication relate only to the items tested for the specific situation simulated in the test.

Prepared By:

Mr. Kelsey A. Chiu, Engineering Department Supervisor
KARCO Engineering, LLC.

Reviewed By: 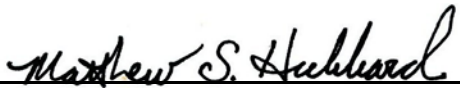

Mr. Mathew S. Hubbard, Quality Assurance Manager
KARCO Engineering, LLC.

Approved By:

Mr. Michael L. Dunlap, Director of Operations
KARCO Engineering, LLC.

Approval Date: June 13, 2011

TABLE OF CONTENTS

Section		Page No.
1	Purpose and Summary of the Test	1
2	Data Sheets	3

Data Sheet No.		Page No.
1	Crash Test Summary	4
2	Bullet Vehicle Parameter Data	5
3	Bullet Vehicle Accelerometer Data	8
4	Bullet Vehicle Accident Investigation Data	9
5	Target Vehicle Parameter Data	10
6	Target Vehicle Accelerometer Data	13
7	Target Vehicle Accident Investigation Data	14
8	Target Vehicle Profile Measurements	15
9	Target Vehicle Structural Measurements	16
10	Target Vehicle Intrusion Measurements	17

Appendix		Page No.
A	Photographs	A
B	Instrumentation Data Traces	B
C	Instrumentation Data Channel Assignments	C

SECTION 1
PURPOSE AND SUMMARY OF TEST

PURPOSE

This 40 mph (64.4 km/h) 30% offset rear impact test was conducted to examine the fuel system integrity of the subject target vehicle, a 1996 Jeep Grand Cherokee Limited 5-door MPV, when impacted by a target vehicle, a 1988 Ford Taurus 4-door sedan, under conditions similar to those of FMVSS 301.

The impact test was conducted in accordance with instructions received by KARCO Engineering, LLC from The Center for Auto Safety. This test was funded by the Center for Auto Safety.

SUMMARY

A 1996 Jeep Grand Cherokee Limited 5-door MPV (target vehicle) was impacted by a 1988 Ford Taurus 4-door sedan (bullet vehicle) at a velocity of 65.53 km/h. The target vehicle was sitting stationary with the transmission in neutral and the parking brake disengaged. It was oriented parallel to the bullet vehicle facing the same direction, with a target offset of 574 mm.

The test was performed at KARCO Engineering, LLC. on May 16, 2011. Pre- and post-test photographs of the vehicle and dummies can be found in Appendix A of this report. Two (2) real-time camera and three (3) high-speed cameras were used to document the vehicle to vehicle impact event.

One Part 572E 50th percentile male anthropomorphic test device (ATD) was placed in both the driver and left front seating positions of the target vehicle. Both ATD's were uninstrumented. One surrogate occupant was placed in both the driver and left front seating positions of the bullet vehicle.

The 6 channels of data were recorded on an on-board data acquisition system. Appendix B contains the dummy response data traces.

The maximum static crush of the target vehicle was 580 mm located at DPD 3 to the left of the vehicle centerline. Both the driver and passenger side doors remained closed during the impact event and were jammed shut after the impact.

The maximum static crush of the bullet vehicle was 370 mm located at DPD 4 to the right of the vehicle centerline[1]. Both the driver and passenger side doors remained closed during the impact event and were operable after the impact.

The target vehicle had immediate Stoddard solvent leakage as a result of the impact with the bullet vehicle. Solvent leaked out from two (2) locations on the fuel tank, both of them were cracks formed on what was the bottom of the fuel tank. All of the Stoddard solvent leaked from the fuel tank from these two (2) locations after the impact, with only trace amounts remaining in the tank.

The hoses routed to the fuel filler remained attached to the fuel tank and the filler neck, and were not severed. The fuel tank did end up with cracks in the plastic around the hose connections, but no Stoddard solvent leaked from that area.

An FMVSS 301 rollover was not performed on the target vehicle as all of the Stoddard solvent had already leaked from the fuel tank.

[1] -Post-Test measurements were taken without the bumper fascia due to damage to the fascia as a result of the impact.

SECTION 2

DATA SHEETS

Bullet Vehicle: 1988 Ford Taurus 4-Door Sedan Project No.: P31070-01

Target Vehicle: 1996 Jeep Grand Cherokee Limited 5-Door MPV Test Date: 05/16/11

CONVERSION FACTORS

Quantity	Typical Application	Std Units	Metric Unit	Multiply By
Mass	Vehicle Weight	lb	kg	0.4536
Linear Velocity	Impact Velocity	miles/hr	km/hr	1.609344
Length or Distance	Measurements	in	mm	25.4
Volume	Fuel Systems	gal	liter	3.785
Volume	Small Fluids	oz	mL	29.573
Pressure	Tire Pressures	lbf/in^2	kPa	7.0
Volume	Liquid	gal	liter	3.785
Temperature	General Use	^oF	^oC	=(tf -32)/1.8
Force	Dynamic Forces	lbf	N	4.448
Moment	Torque	lbf•ft	N•m	1.355

DATA SHEET NO. 1

CRASH TEST SUMMARY

Bullet Vehicle: 1988 Ford Taurus 4-Door Sedan Project No.: P31070-01

Target Vehicle: 1996 Jeep Grand Cherokee Limited 5-Door MPV Test Date: 05/16/11

PRIMARY IMPACT DATA

Parameter	Units	Value
Bullet Vehicle Velocity at Impact	km/h	65.53
Bullet Vehicle Test Weight	kg	1529.0
Bullet Vehicle Maximum Static Crush	mm	370
Target Vehicle Test Weight	kg	1899.0
Target Vehicle Maximum Static Crush	mm	580
Impact Point (From Centerline)	mm	560

BULLET VEHICLE DOOR OPENING AND SEAT TRACK DATA

Description	Driver	Passenger
Front Door Opening	Remained closed and operational	Remained closed and operational
Rear Door Opening	Remained closed and operational	Remained closed and operational
Seat Track Shift	Unknown	Unknown
Seat Back Failure	No	No

TARGET VEHICLE DOOR OPENING AND SEAT TRACK DATA

Description	Driver	Passenger
Front Door Opening	Jammed shut	Jammed shut
Rear Door Opening	Jammed shut	Jammed shut
Seat Track Shift	Unknown	Unknown
Seat Back Failure	Yes	Yes

VIDEO COVERAGE

Description	Number
High Speed Video Cameras	3
Real Time Video Cameras	2
Total	5

INSTRUMENTATION SUMMARY

Description	Number
Driver ATD Sensors	
Passenger ATD Sensors	
Bullet Vehicle Structure Accelerometers	3
Target Vehicle Structure Accelerometers	3
Total	6

DATA SHEET NO. 2

BULLET VEHICLE PARAMETER DATA

Bullet Vehicle: 1988 Ford Taurus 4-Door Sedan Project No.: P31070-01

Target Vehicle: 1996 Jeep Grand Cherokee Limited 5-Door MPV Test Date: 05/16/11

BULLET VEHICLE INFORMATION AND OPTIONS

Make	Ford
Year	1988
Model	Taurus
Body Style	4-Door Sedan
VIN	1FABP52U8JG196592
Body Color	Tan
Delivery Date	5/6/2011
Odometer Reading (mi)	48,952
Odometer Reading (km)	78,781
Dealer	
Transmission	3-Speed Automatic
Final Drive	Front
Type / No. of Cylinders	V6
Engine Displacement (L)	3.0

Engine Placement	Transverse
Power Brakes	Yes
Front Disc Brakes	Yes
Rear Disc Brakes	No
Anti-Lock Brakes	No
Driver Front Airbag	No
Pass. Front Airbag	No
Power Windows	Yes
Power Steering	Yes
Tilt Wheel	Yes
Power Door Locks	Yes
Air Conditioning	Yes
Power Seat	Yes
AM/FM/Cassette	Yes

DATA FROM CERTIFICATION LABEL

Manufactured By	Ford Motor Co.
Date of Manufacture	Feb-88

GVWR (kg)	2093.0
GAWR Front (kg)	1176.0
GAWR Rear (kg)	968.0

VEHICLE SEATING AND CAPACITY WEIGHT INFORMATION

Measured Parameter	Front	Rear	Third	Total
Type of Seats	Bucket	Bench		
Number of Occupants	2	3		5
Capacity Weight (VCW) (kg)				408.0
Cargo Weight (RCLW) (kg)				67.8

DATA SHEET NO. 2 … (CONTINUED)

BULLET VEHICLE PARAMETER DATA

Bullet Vehicle: 1988 Ford Taurus 4-Door Sedan Project No.: P31070-01

Target Vehicle: 1996 Jeep Grand Cherokee Limited 5-Door MPV Test Date: 05/16/11

BULLET VEHICLE WEIGHTS

	Units	As Delivered Weights (UVW)			As Tested Weights (ATW)		
		Front Axle	Rear Axle	Total	Front Axle	Rear Axle	Total
Left	kg	503.5	203.5		514.5	273.0	
Right	kg	401.5	268.0		461.0	280.5	
Ratio	%	65.7%	34.3%	100.0%	63.8%	36.2%	100.0%
Total	kg	905.0	471.5	1376.5	975.5	553.5	1529.0

BULLET VEHICLE TARGET TEST WEIGHT CALCULATION

Measured Parameter	Units	Value	
Total Delivered Weight (UVW)	kg	1376.5	A
Weight of Surrogate Occupants	kg	170.0	B
Rated Cargo/Luggage Weight (RCLW)	kg	67.8	C
Calculated Vehicle Target Weight (TVTW)	kg	1614.3	A+B+C

BULLET VEHICLE ATTITUDES

Condition	Units	LF	RF	LR	RR
As Delivered	mm	696	693	654	647
As Tested	mm	667	665	615	608
Post-Test	mm	649	695	628	609

Description	Units	Value
Vehicle Components Removed	kg	0.0
Ballast Added	kg	36.0

BULLET VEHICLE COMPONENTS REMOVED:

None

DATA SHEET NO. 2 … (CONTINUED)

BULLET VEHICLE PARAMETER DATA

Bullet Vehicle: 1988 Ford Taurus 4-Door Sedan Project No.: P31070-01

Target Vehicle: 1996 Jeep Grand Cherokee Limited 5-Door MPV Test Date: 05/16/11

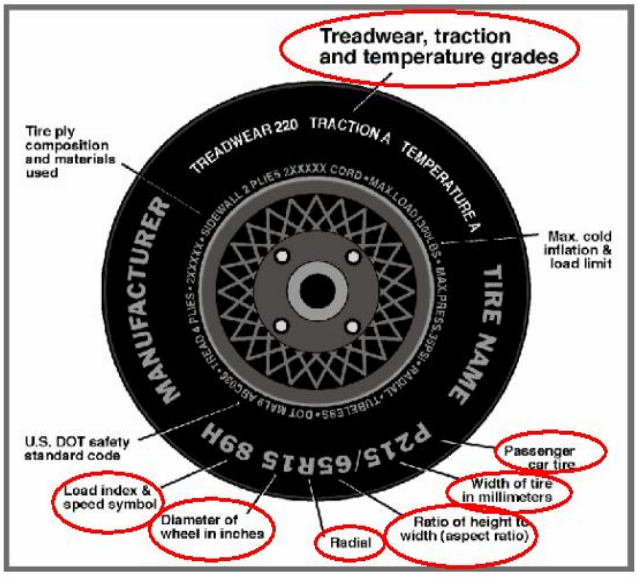

BULLET VEHICLE TIRE INFORMATION

Measured Parameter	Front	Rear
Max. Tire Pressure (kPa)	245	245
Cold Pressure (kPa)	240	240
Recommended Tire Size	P205/70R14	P205/70R14
Tire Size on Vehicle	P195/70R14	P195/70R14
Tire Manufacturer	Futura	Futura
Tire Model	775	775
Treadwear	380	380
Traction	A	A
Temperature Grades	B	B
Tire Plies Sidewall	2 Polyester	2 Polyester
Tire Plies Body	2 Steel, 1 Polyester	2 Steel, 1 Polyester
Load Index / Speed Symbol	90S	90S
Tire Material	Polyester, Steel	Polyester, Steel
DOT Safety Code Left	U9RW XC8 0304 B12L	U9RW XC8 3003 B12L
DOT Safety Code Right	U9RW XC8 0404 A12L	U9RW XC8 0304 B12R

DATA SHEET NO. 3

BULLET VEHICLE ACCELEROMETER DATA

Bullet Vehicle: 1988 Ford Taurus 4-Door Sedan Project No.: P31070-01

Target Vehicle: 1996 Jeep Grand Cherokee Limited 5-Door MPV Test Date: 05/16/11

BULLET VEHICLE ACCELEROMETER PRE-TEST LOCATIONS

No.	Description	Location		
		X	Y	Z
1	Vehicle Center of Gravity	2187	0	272

Reference Points: X – Rear Surface of Vehicle (+ forward)

Y – Vehicle Centerline (+ to left)

Z – Ground Plane (+ up)

DATA SHEET NO. 4

BULLET VEHICLE ACCIDENT INVESTIGATION DATA

Bullet Vehicle: 1988 Ford Taurus 4-Door Sedan Project No.: P31070-01

Target Vehicle: 1996 Jeep Grand Cherokee Limited 5-Door MPV Test Date: 05/16/11

VEHICLE INFORMATION

VIN: 1FABP52U8JG196592 Wheelbase (mm): Unknown

Vehicle Size Category: 4-Door Sedan Test Weight (kg): 1529.0

ACCELEROMETER DATA

Accelerometer Locations: Vehicle Center Tunnel

Cal. Procedure/Interval: Drop Test / 6 months

Integration Algorithm: NHTSA Standard Linearity: Good

Impact Velocity (km/h): 65.53

Velocity Change (km/h): 43.1

Time of Separation (msec): n/a

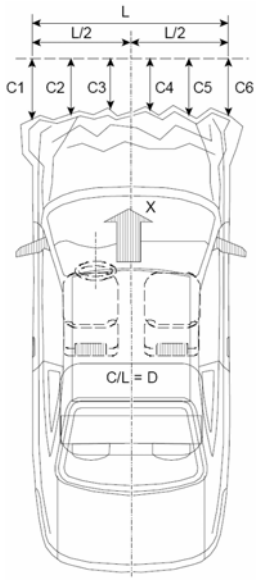

CRUSH PROFILE

Collision Deformation Classification: 01FZEW2

Midpoint of Damage: Vehicle Centerline

Damage Region Length (mm): 1507

Impact Mode: Offset Frontal

No.	Measurement Description	Units	Pre-Test	Post-Test[2]	Difference
C1	Crush Zone 1 at Left Side	mm	160	180	-20
C2	Crush Zone 2 at Left Side	mm	60	110	-50
C3	Crush Zone 3 at Left Side	mm	20	383	-363
C4	Crush Zone 4 at Right Side	mm	20	390	-370
C5	Crush Zone 5 at Right Side	mm	60	283	-223
C6	Crush Zone 6 at Right Side	mm	160	271	-111
L	C1 to C6	mm	1507		

[2] – Post-Test measurements were taken without the bumper fascia due to damage to the fascia as a result of the impact.

DATA SHEET NO. 5

TARGET VEHICLE PARAMETER DATA

Bullet Vehicle: 1988 Ford Taurus 4-Door Sedan Project No.: P31070-01

Target Vehicle: 1996 Jeep Grand Cherokee Limited 5-Door MPV Test Date: 05/16/11

TARGET VEHICLE INFORMATION AND OPTIONS

Make	Jeep
Year	1996
Model	Grand Cherokee Limited
Body Style	5-Door MPV
VIN	1J4GZ78S7TC184529
Body Color	White
Delivery Date	5/6/2011
Odometer Reading (mi)	172,686
Odometer Reading (km)	277,911
Dealer	
Transmission	4-Speed Automatic
Final Drive	4x4
Type / No. of Cylinders	Inline-6
Engine Displacement (L)	4.0

Engine Placement	Longitudinal
Power Brakes	Yes
Front Disc Brakes	Yes
Rear Disc Brakes	Yes
Anti-Lock Brakes	Yes
Driver Front Airbag	Yes
Pass. Front Airbag	Yes
Power Windows	Yes
Power Steering	Yes
Tilt Wheel	Yes
Power Door Locks	Yes
Air Conditioning	Yes
Power Seat	Yes
AM/FM/Cassette	Yes

DATA FROM CERTIFICATION LABEL

Manufactured By	Chrysler Corporation
Date of Manufacture	Oct-95

GVWR (kg)	2405.0
GAWR Front (kg)	1248.0
GAWR Rear (kg)	1339.0

VEHICLE SEATING AND CAPACITY WEIGHT INFORMATION

Measured Parameter	Front	Rear	Third	Total
Type of Seats	Bucket	Bench		
Number of Occupants	2	3		5
Capacity Weight (VCW) (kg)				Unavailable
Cargo Weight (RCLW) (kg)				Unavailable

DATA SHEET NO. 5 … (CONTINUED)

TARGET VEHICLE PARAMETER DATA

Bullet Vehicle: 1988 Ford Taurus 4-Door Sedan Project No.: P31070-01

Target Vehicle: 1996 Jeep Grand Cherokee Limited 5-Door MPV Test Date: 05/16/11

TARGET VEHICLE WEIGHTS

	Units	As Delivered Weights (UVW)			As Tested Weights (ATW)		
		Front Axle	Rear Axle	Total	Front Axle	Rear Axle	Total
Left	kg	505.5	378.5		544.0	420.0	
Right	kg	502.0	359.5		533.0	402.0	
Ratio	%	57.7%	42.3%	100.0%	56.7%	43.3%	100.0%
Total	kg	1007.5	738.0	1745.5	1077.0	822.0	1899.0

TARGET VEHICLE TARGET TEST WEIGHT CALCULATION

Measured Parameter	Units	Value	
Total Delivered Weight (UVW)	kg	1745.5	A
Weight of 2 P572E ATD's	kg	152.0	B
Rated Cargo/Luggage Weight (RCLW)	kg	136.0	C
Calculated Vehicle Target Weight (TVTW)	kg	2033.5	A+B+C

TARGET VEHICLE ATTITUDES

Condition	Units	LF	RF	LR	RR
As Delivered	mm	810	810	825	824
As Tested	mm	792	799	814	802
Post-Test	mm	806	781	690	728

Description	Units	Value
Vehicle Components Removed	kg	52.5
Ballast Added	kg	38.0

TARGET VEHICLE COMPONENTS REMOVED:

Rear Door Panels (5.0 kg), Front Door Panels (7.0 kg), Rear Door Side Windows (12.0 kg) Outboard Mirrors (3.0 kg), Rear Door Speakers (2.0 kg), Spare Tire (21.5 kg), Front Door Speakers (2.0 kg)

DATA SHEET NO. 5 … (CONTINUED)

TARGET VEHICLE PARAMETER DATA

Bullet Vehicle: 1988 Ford Taurus 4-Door Sedan Project No.: P31070-01

Target Vehicle: 1996 Jeep Grand Cherokee Limited 5-Door MPV Test Date: 05/16/11

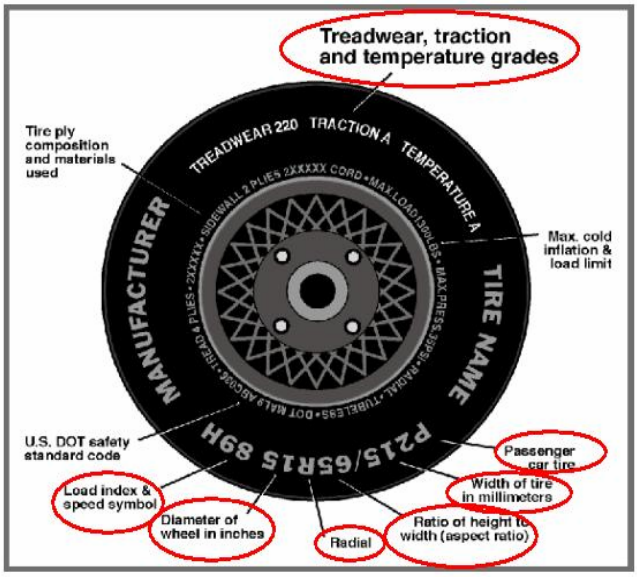

TARGET VEHICLE TIRE INFORMATION

Measured Parameter	Front	Rear
Max. Tire Pressure (kPa)	300	300
Cold Pressure (kPa)	248	248
Recommended Tire Size	P225/70R16	P225/70R16
Tire Size on Vehicle	P245/70R16	P245/70R16
Tire Manufacturer	Kumho	Kumho
Tire Model	Solus KR21	Solus KR21
Treadwear	680	680
Traction	A	A
Temperature Grades	B	B
Tire Plies Sidewall	2 Polyester	2 Polyester
Tire Plies Body	2 Polyester, 2 Steel, 1Nylon	2 Polyester, 2 Steel, 1Nylon
Load Index / Speed Symbol	101T	101T
Tire Material	Polyester, Steel, Nylon	Polyester, Steel, Nylon
DOT Safety Code Left	C0VH YP6V 2507	C0VH YP6V 2507
DOT Safety Code Right	C0VH YP6V 2507	C0VH YP6V 2507

DATA SHEET NO. 6

TARGET VEHICLE ACCELEROMETER DATA

Bullet Vehicle: 1988 Ford Taurus 4-Door Sedan Project No.: P31070-01

Target Vehicle: 1996 Jeep Grand Cherokee Limited 5-Door MPV Test Date: 05/16/11

TARGET VEHICLE ACCELEROMETER PRE-TEST LOCATIONS

No.	Description	Location		
		X	Y	Z
1	Vehicle Center of Gravity	1745	0	498

Reference Points: X – Rear Surface of Vehicle (+ forward)

Y – Vehicle Centerline (+ to left

Z – Ground Plane (+ up)

DATA SHEET NO. 7

TARGET VEHICLE ACCIDENT INVESTIGATION DATA

Bullet Vehicle: 1988 Ford Taurus 4-Door Sedan Project No.: P31070-01

Target Vehicle: 1996 Jeep Grand Cherokee Limited 5-Door MPV Test Date: 05/16/11

VEHICLE INFORMATION

VIN: 1J4GZ78S7TC184529 Wheelbase (mm): 2690

Vehicle Size Category: 5-Door MPV Test Weight (kg): 1899.0

ACCELEROMETER DATA

Accelerometer Locations: Vehicle Center Tunnel

Cal. Procedure/Interval: Drop Test / 6 months

Integration Algorithm: NHTSA Standard Linearity: Good

Impact Velocity (km/h): 65.53

Velocity Change (km/h): 34.9

Time of Separation (msec): n/a

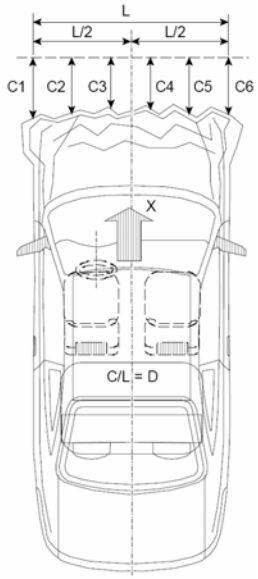

CRUSH PROFILE

Collision Deformation Classification: 07BYEW4

Midpoint of Damage: Vehicle Centerline

Damage Region Length (mm): 1465

Impact Mode: Offset Frontal

No.	Measurement Description	Units	Pre-Test	Post-Test	Difference
C1	Crush Zone 1 at Left Side	mm	65	85	-20
C2	Crush Zone 2 at Left Side	mm	0	303	-303
C3	Crush Zone 3 at Left Side	mm	20	600	-580
C4	Crush Zone 4 at Right Side	mm	20	543	-523
C5	Crush Zone 5 at Right Side	mm	0	507	-507
C6	Crush Zone 6 at Right Side	mm	65	520	-455
L	C1 to C6	mm	1465		

DATA SHEET NO. 8

TARGET VEHICLE PROFILE MEASUREMENTS

Bullet Vehicle: 1988 Ford Taurus 4-Door Sedan Project No.: P31070-01

Target Vehicle: 1996 Jeep Grand Cherokee Limited 5-Door MPV Test Date: 05/16/11

TARGET VEHICLE PROFILE MEASUREMENTS

No.	Measurement Description	Pre-Test	Post-Test	Difference
1	Total Length of Vehicle at Centerline	4500	3970	-530
2	Rear Surface of Vehicle to Front of Engine			
3	RSOV to Firewall			
4	FSOV to Upper Leading Edge of Right Door	1383	1405	22
5	FSOV to Upper Leading Edge of Left Door	1385	1391	6
6	FSOV to Lower Leading Edge of Right Door	1430	1428	-2
7	FSOV to Lower Leading Edge of Left Door	1435	1422	-13
8	FSOV to Upper Trailing Edge of Right Door	2446	2469	23
9	FSOV to Upper Trailing Edge of Left Door	2448	2456	8
	FSOV to Leading Edge of Left Door	1385	1391	6
	FSOV to Leading Edge of Right Door	1383	1405	22
	FSOV to Trailing Edge of Left Door	2448	2456	8
	FSOV to Trailing Edge of Right Door	2446	2469	23
10	FSOV to Lower Trailing Edge of Right Door	2471	2479	8
11	FSOV to Lower Trailing Edge of Left Door	2469	2470	1
	FSOV to Upper Trailing Edge of Right Rear Door	3351	3359	8
	FSOV to Upper Trailing Edge of Left Rear Door	3351	3340	-11
	FSOV to Trailing Edge of Right Rear Door	3351	3359	8
	FSOV to Trailing Edge of Left Rear Door	3351	3355	4
	FSOV to Lower Trailing Edge of Right Rear Door	3062	3067	5
	FSOV to Lower Trailing Edge of Left Rear Door	3064	3053	-11
12	FSOV to Bottom of A-Pillar of Right Side	1431	1432	1
13	FSOV to Bottom of A-Pillar of Left Side	1433	1424	-9
	FSOV to Bottom of B-Pillar on Right Side	2480	2477	-3
	FSOV to Bottom of B-Pillar on Left Side	2480	2475	-5
	FSOV to Bottom of C-Pillar on Right Side	3350	3358	8
	FSOV to Bottom of C-Pillar on Left Side	3355	3313	-42
14	RSOV to Firewall, Right Side			
15	RSOV to Firewall, Left Side			
16	FSOV to Steering Column	1877	1935	58
17	Center of Steering Column to A-Pillar	402	400	-2
18	Center of Steering Column to Headliner	420	435	15
19	FSOV to Right Side of Rear Bumper	3813	4237	424
20	FSOV to Left Side of Rear Bumper	3814	3627	-187

All measurements in millimeters.

DATA SHEET NO. 9

TARGET VEHICLE STRUCTURAL MEASUREMENTS

Bullet Vehicle: 1988 Ford Taurus 4-Door Sedan Project No.: P31070-01

Target Vehicle: 1996 Jeep Grand Cherokee Limited 5-Door MPV Test Date: 05/16/11

TARGET VEHICLE STRUCTURAL MEASUREMENTS

No.	Description	Pre-Test	Post-Test	Difference
1	Total Length	4500	4450	-50
2	Total Width	1765	2060	295
3	Bumper Top Height	705	735	30
4	Bumper Bottom Height	350	390	40
5	Longitudinal Member Top Height			
6	Distance Between Longitudinal Members			
7	Longitudinal Member Width			
8	Engine Top Height			
9	Engine Bottom Height			
10	Engine and Gearbox Width			
11	Front Bumper to Engine Distance			
12	Front Shock Absorber Fixing Height			
13	Bonnet Leading Edge Height			
14	Front Shock Absorber Fixing Width			
15	Front Bumper to Front Axle Distance			
16	Front Axle to A-Pillar Distance	610	610	0
17	A-Pillar to B-Pillar Distance	978	975	-3
	C-Pillar to Rear Axle Distance	433	355	-78
18	B-Pillar to Rear Axle Distance	1035	935	-100
19	B-Pillar to C-Pillar Distance	840	813	-27
20	Roof Sill Bottom Height	1522	1524	2
21	Roof Sill Top Height	1601	1600	-1
22	Floor Sill Bottom Height	361	365	4
23	Floor Sill Top Height	498	503	5

All measurements in millimeters.

DATA SHEET NO. 10

TARGET VEHICLE INTRUSION MEASUREMENTS

Bullet Vehicle: 1988 Ford Taurus 4-Door Sedan Project No.: P31070-01

Target Vehicle: 1996 Jeep Grand Cherokee Limited 5-Door MPV Test Date: 05/16/11

DOOR OPENING WIDTH

Item	Description	Units	Pre-Test	Post-Test	Difference
A	Left Side Front Upper	mm	980	975	-5
B	Left Side Front Lower	mm	921	926	5
	Left Side Rear Upper	mm	840	796	-44
	Left Side Rear Lower	mm	544	528	-16
D	Right Side Front Upper	mm	976	975	-1
E	Right Side Front Lower	mm	920	918	-2
	Right Side Rear Upper	mm	840	823	-17
	Right Side Rear Lower	mm	541	526	-15

WHEELBASE MEASUREMENTS

Item	Description	Units	Pre-Test	Post-Test	Difference
C	Left Side Wheelbase	mm	2690	2610	-80
F	Right Side Wheelbase	mm	2690	2690	0

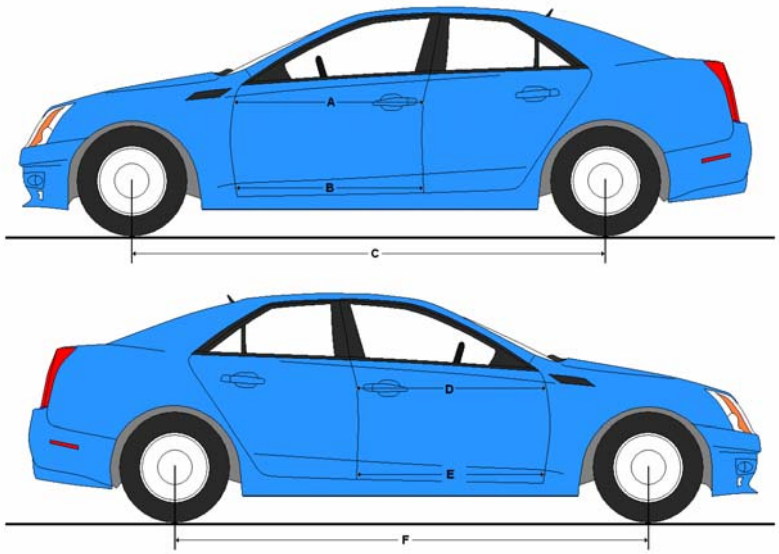

DATA SHEET NO. 10 … (CONTINUED)

TARGET VEHICLE INTRUSION MEASUREMENTS

Bullet Vehicle: 1988 Ford Taurus 4-Door Sedan Project No.: P31070-01

Target Vehicle: 1996 Jeep Grand Cherokee Limited 5-Door MPV Test Date: 05/16/11

DRIVER COMPARTMENT INTRUSION

Item	Description	Units	Pre-Test	Post-Test	Difference
AB	Door Opening (Inside Window Jam)	mm	980	903	-77
CX	Left Knee Bolster to X	mm	302	320	18
DX	Right Knee Bolster to X	mm	325	285	-40
EX	Brake Pedal to X	mm	464	540	76
FX	Foot Rest to X	mm	690	600	-90
GX	Center of Steering Wheel Hub to X	mm	115	20	-95

X = Front of Seat Track (Stationary)

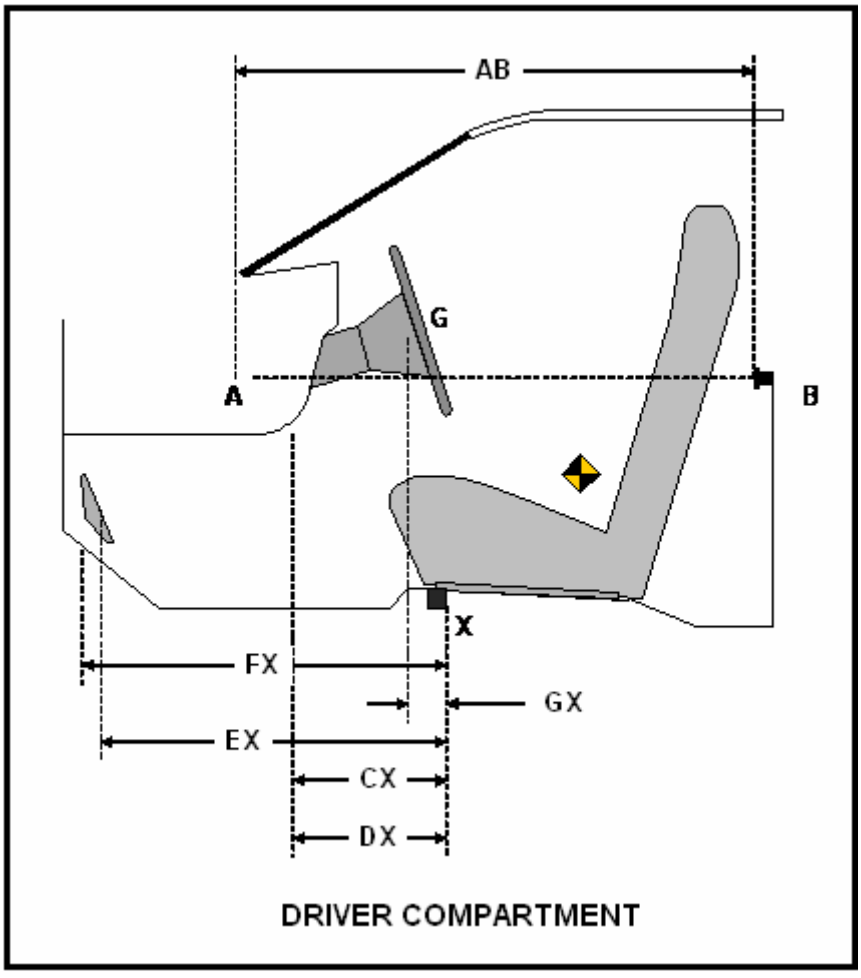

APPENDIX A

PHOTOGRAPHS

TABLE OF PHOTOGRAPHS

Figure		Page
1	Bullet Vehicle, As-Received	A-1
2	Bullet Vehicle, As-Received	A-1
3	Bullet Vehicle Manufacturer's Label	A-2
4	Bullet Vehicle Tire Placard	A-2
5	Target Vehicle, As-Received	A-3
6	Target Vehicle, As-Received	A-3
7	Target Vehicle Manufacturer's Label	A-4
8	Target Vehicle Tire Placard	A-4
9	Test Setup, Left Side	A-5
10	Test Setup, Left Front ¾	A-5
11	Test Setup, Front	A-6
12	Test Setup, Right Front ¾	A-6
13	Test Setup, Right Side	A-7
14	Test Setup, Right Rear ¾	A-7
15	Test Setup, Rear	A-8
16	Test Setup, Left Rear ¾	A-8
17	Test Setup	A-9
18	Post-Test	A-9
19	Pre-Test Bullet Vehicle, Left Side	A-10
20	Post-Test Bullet Vehicle, Left Side	A-10
21	Pre-Test Bullet Vehicle, Left Front ¾	A-11
22	Post-Test Bullet Vehicle, Left Front ¾	A-11
23	Pre-Test Bullet Vehicle, Front	A-12
24	Post-Test Bullet Vehicle, Front	A-12
25	Pre-Test Bullet Vehicle, Right Front ¾	A-13
26	Post-Test Bullet Vehicle, Right Front ¾	A-13
27	Pre-Test Bullet Vehicle, Right Side	A-14
28	Post-Test Bullet Vehicle, Right Side	A-14
29	Pre-Test Target Vehicle, Left Side	A-15
30	Post-Test Target Vehicle, Left Side	A-15
31	Pre-Test Target Vehicle, Left Rear ¾	A-16
32	Post-Test Target Vehicle, Left Rear ¾	A-16
33	Pre-Test Target Vehicle, Rear	A-17
34	Post-Test Target Vehicle, Rear	A-17
35	Pre-Test Target Vehicle, Right Rear ¾	A-18

TABLE OF PHOTOGRAPHS … (CONTINUED)

Figure		Page
36	Post-Test Target Vehicle, Right Rear ¾	A-18
37	Pre-Test Target Vehicle, Right Side	A-19
38	Post-Test Target Vehicle, Right Side	A-19
39	Pre-Test Target Vehicle	A-20
40	Post-Test Target Vehicle	A-20
41	Pre-Test Target Vehicle	A-21
42	Post-Test Target Vehicle	A-21
43	Pre-Test Target Vehicle	A-22
44	Post-Test Target Vehicle	A-22
45	Pre-Test Target Vehicle	A-23
46	Post-Test Target Vehicle	A-23
47	Pre-Test Target Vehicle	A-24
48	Post-Test Target Vehicle	A-24
49	Post-Test Target Vehicle	A-25
50	Post-Test Target Vehicle	A-25
51	Post-Test Target Vehicle	A-26
52	Post-Test Target Vehicle	A-26
53	Post-Test Target Vehicle	A-27
54	Post-Test Target Vehicle	A-27
55	Post-Test Target Vehicle, Fuel Tank	A-28
56	Post-Test Target Vehicle, Fuel Tank	A-28
57	Post-Test Target Vehicle, Fuel Tank	A-29
58	Post-Test Target Vehicle, Fuel Tank	A-29
59	Post-Test Target Vehicle, Fuel Tank	A-30
60	Post-Test Target Vehicle, Fuel Tank	A-30

FIGURE 1. Bullet Vehicle, As Received

FIGURE 2. Bullet Vehicle, As Received

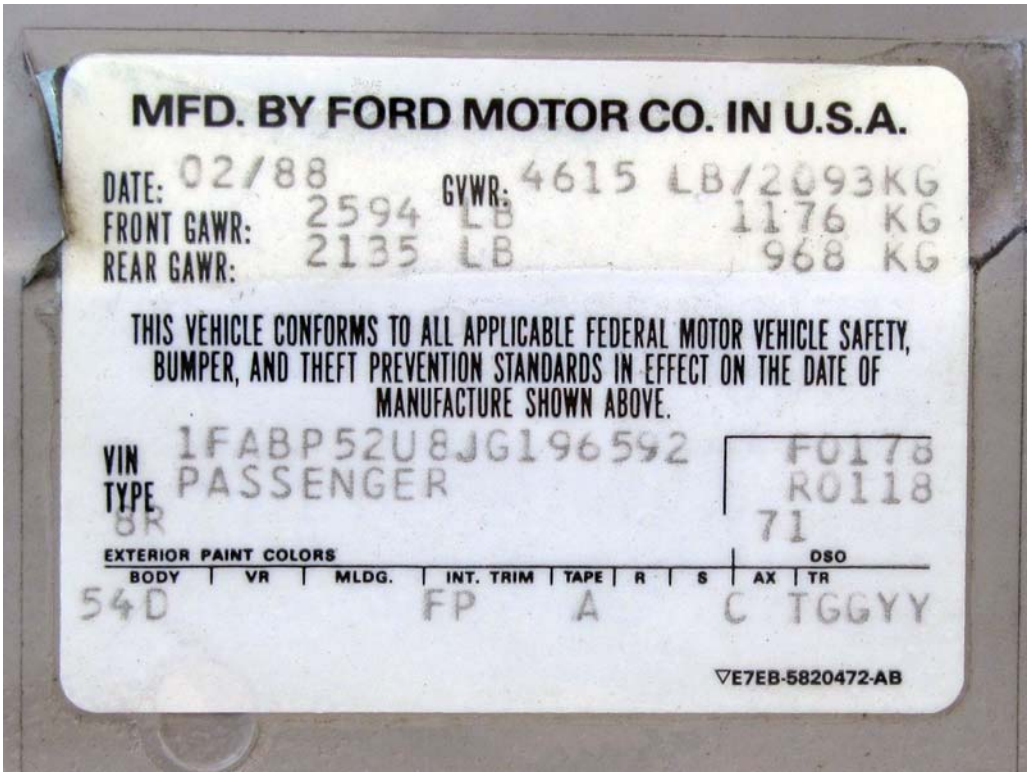

FIGURE 3. Bullet Vehicle Manufacturer's Label

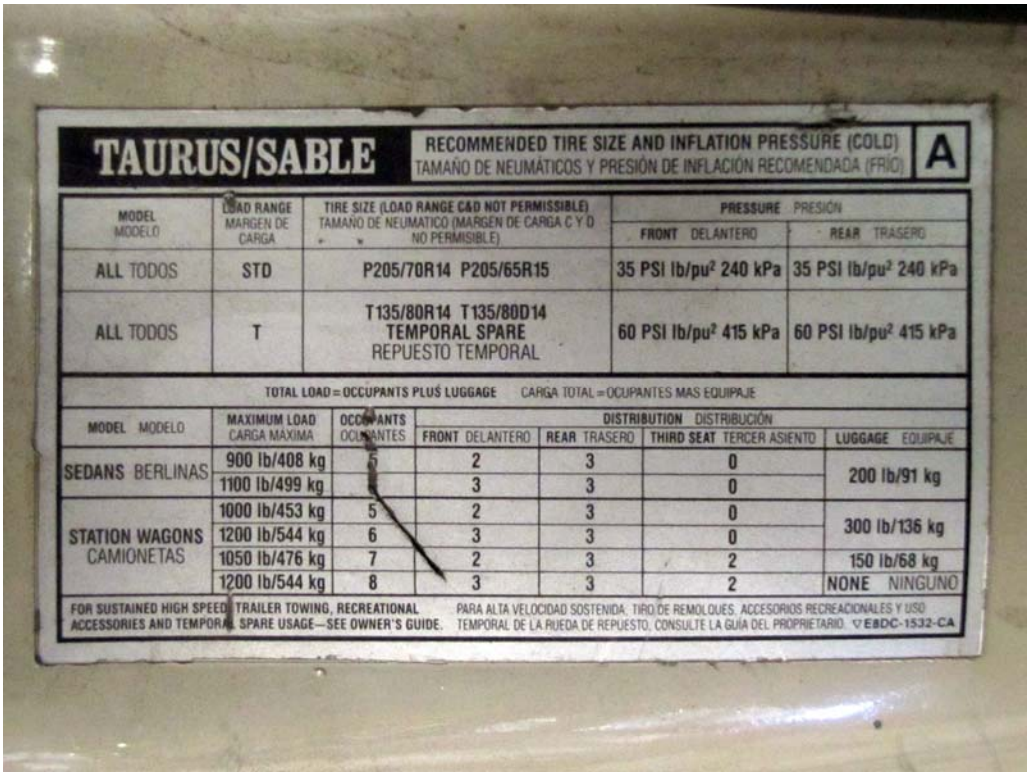

FIGURE 4. Bullet Vehicle Tire Placard

FIGURE 5. Target Vehicle, As-Received

FIGURE 6. Target Vehicle, As-Received

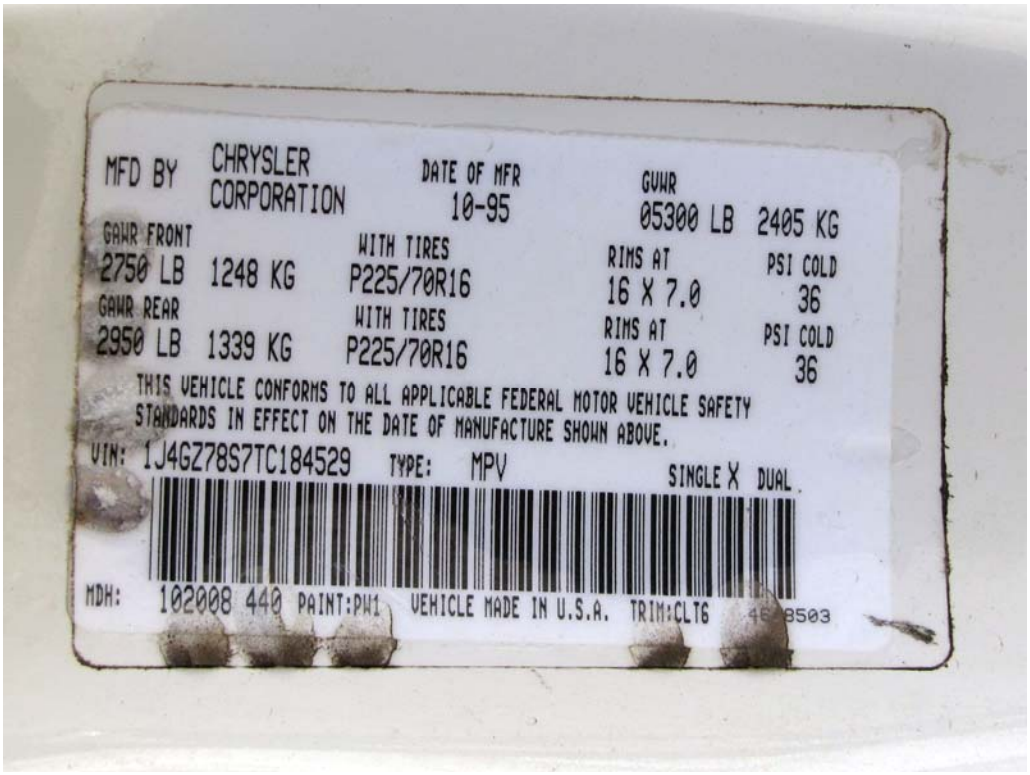

FIGURE 7. Target Vehicle Manufacturer's Label

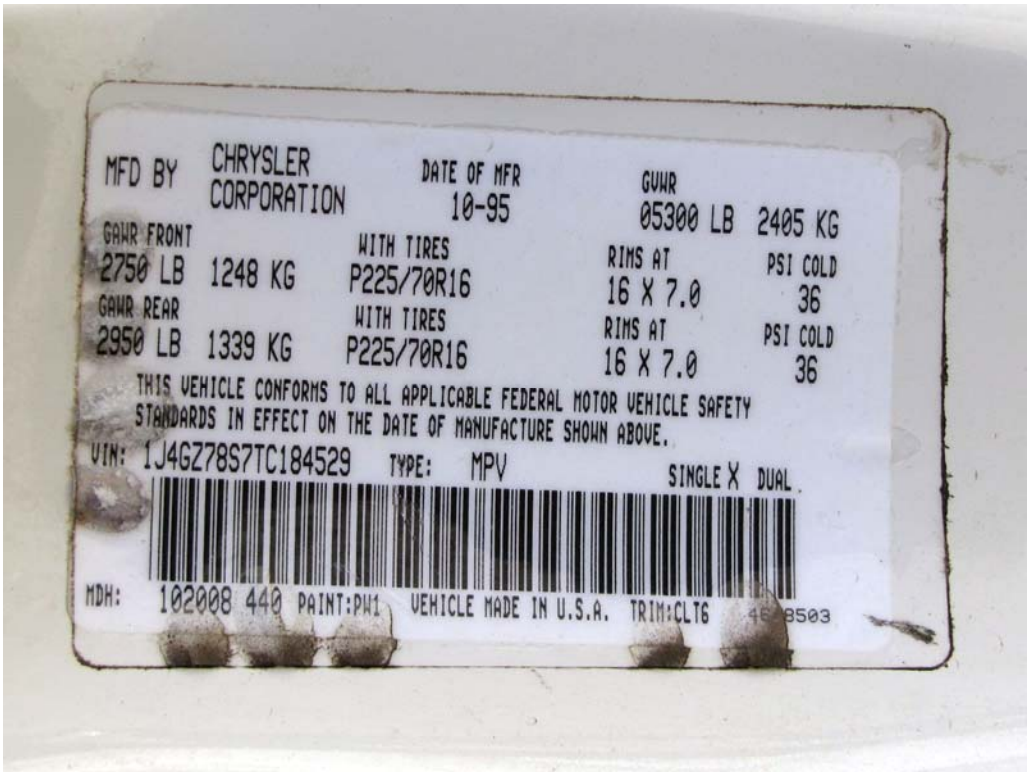

FIGURE 8. Target Vehicle Tire Placard

FIGURE 9. Test Setup, Left Side

FIGURE 10. Test Setup, Left Front ¾

FIGURE 11. Test Setup, Front

FIGURE 12. Test Setup, Right Front ¾

FIGURE 13. Test Setup, Right Side

FIGURE 14. Test Setup, Right Rear ¾

FIGURE 15. Test Setup, Rear

FIGURE 16. Test Setup, Left Rear ¾

FIGURE 17. Test Setup

FIGURE 18. Post Test

FIGURE 19. Pre-Test Bullet Vehicle, Left Side

FIGURE 20. Post-Test Bullet Vehicle, Left Side

FIGURE 21. Pre-Test Bullet Vehicle, Left Front ¾

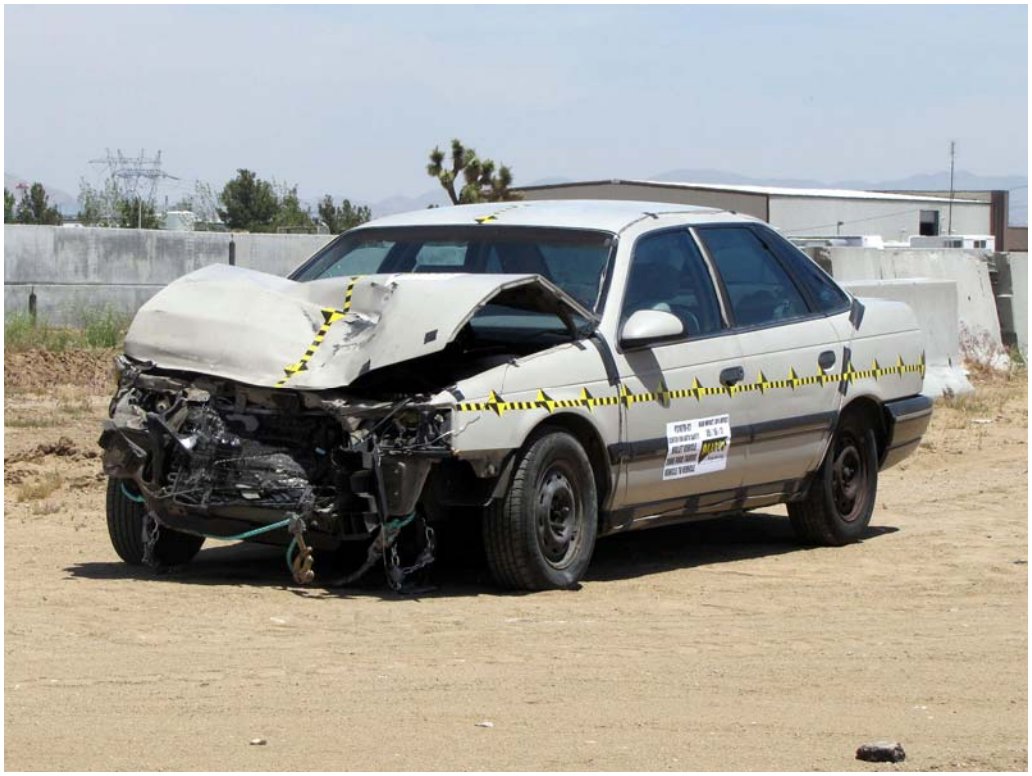

FIGURE 22. Post-Test Bullet Vehicle, Left Front ¾

FIGURE 23. Pre-Test Bullet Vehicle, Front

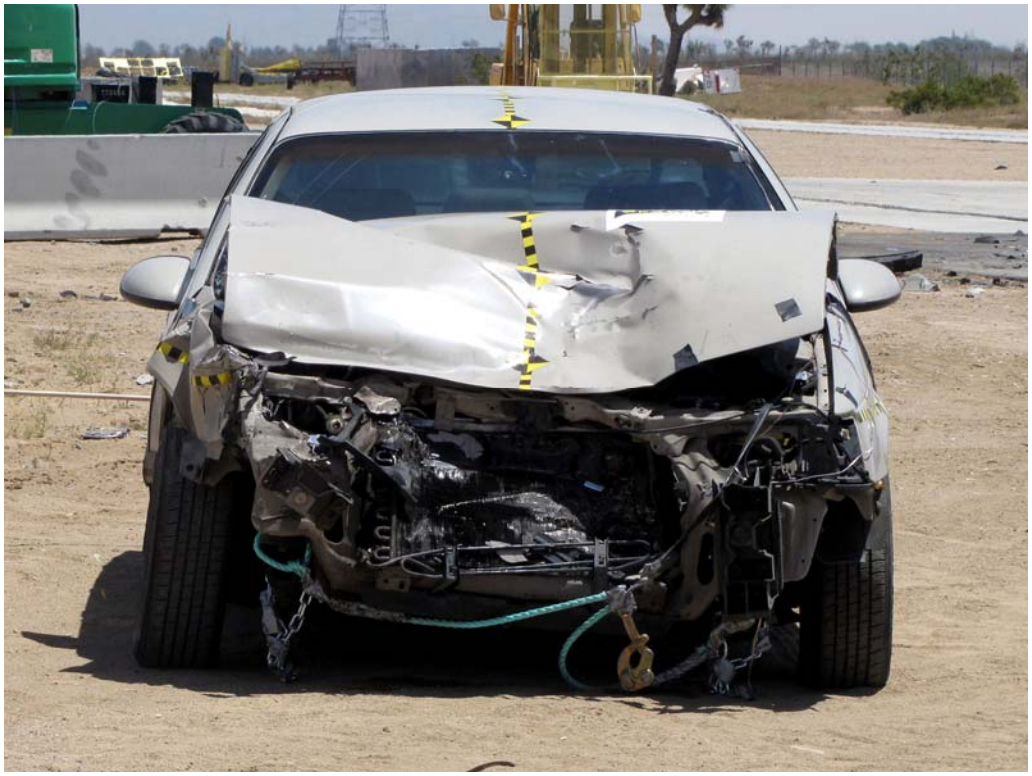

FIGURE 24. Post-Test Bullet Vehicle, Front

FIGURE 25. Pre-Test Bullet Vehicle, Right Front ¾

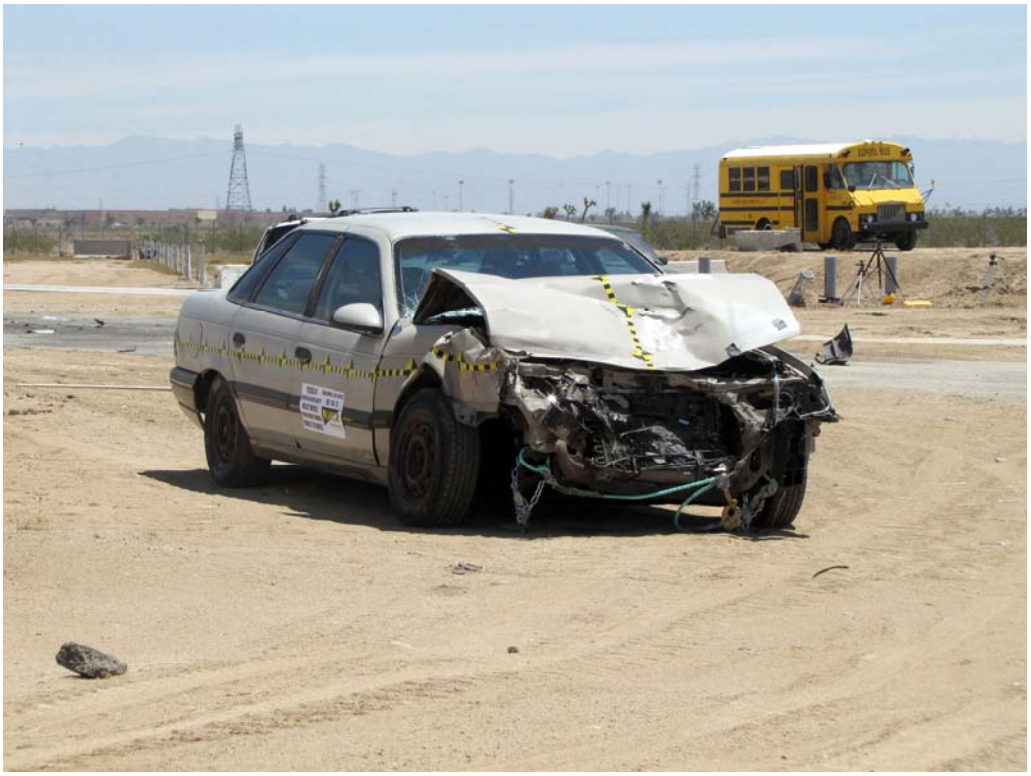

FIGURE 26. Post-Test Bullet Vehicle, Right Front ¾

FIGURE 27. Pre-Test Bullet Vehicle, Right Side

FIGURE 28. Post-Test Bullet Vehicle, Right Side

FIGURE 29. Pre-Test Target Vehicle, Left Side

FIGURE 30. Post-Test Target Vehicle, Left Side

FIGURE 31. Pre-Test Target Vehicle, Left Rear ¾

FIGURE 32. Post-Test Target Vehicle, Left Rear ¾

FIGURE 33. Pre-Test Target Vehicle, Rear

FIGURE 34. Post-Test Target Vehicle, Rear

FIGURE 35. Pre-Test Target Vehicle, Right Rear ¾

FIGURE 36. Post-Test Target Vehicle, Right Rear ¾

FIGURE 37. Pre-Test Target Vehicle, Right Side

FIGURE 38. Post-Test Target Vehicle, Right Side

FIGURE 39. Pre-Test Target Vehicle

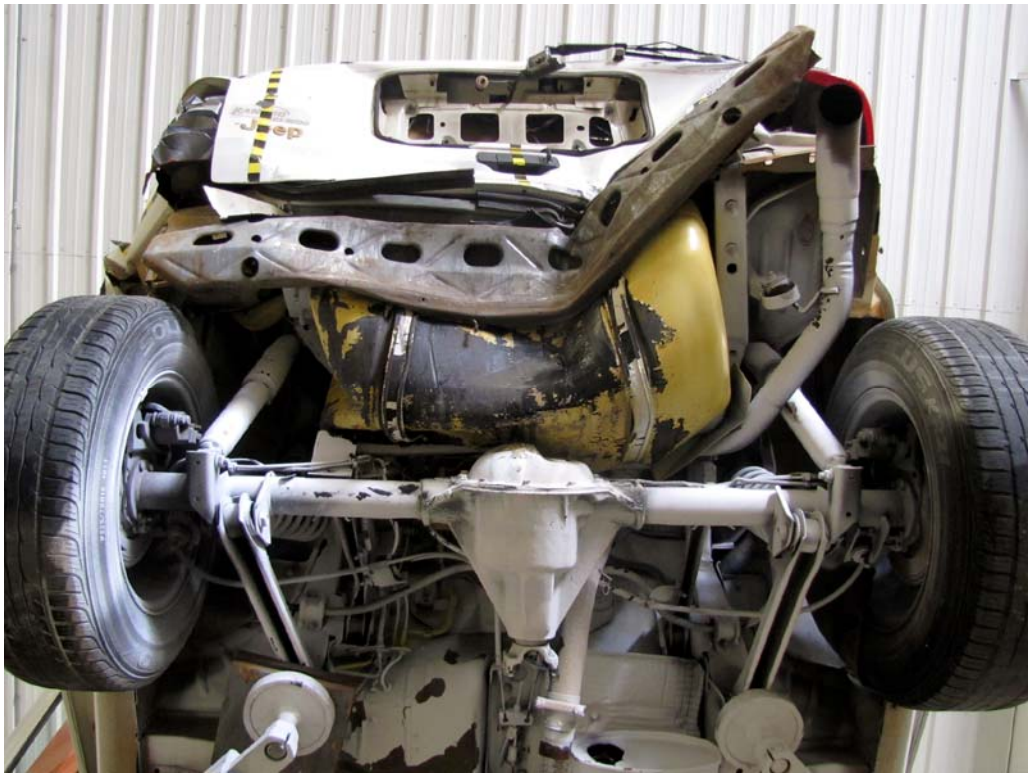

FIGURE 40. Post-Test Target Vehicle

FIGURE 41. Pre-Test Target Vehicle

FIGURE 42. Post-Test Target Vehicle

FIGURE 43. Pre-Test Target Vehicle

FIGURE 44. Post-Test Target Vehicle

FIGURE 45. Pre-Test Target Vehicle

FIGURE 46. Post-Test Target Vehicle

FIGURE 47. Pre-Test Target Vehicle

FIGURE 48. Post-Test Target Vehicle

FIGURE 49. Post-Test Target Vehicle

FIGURE 50. Post-Test Target Vehicle

FIGURE 51. Post-Test Target Vehicle

FIGURE 52. Post-Test Target Vehicle

FIGURE 53. Post -Test Target Vehicle

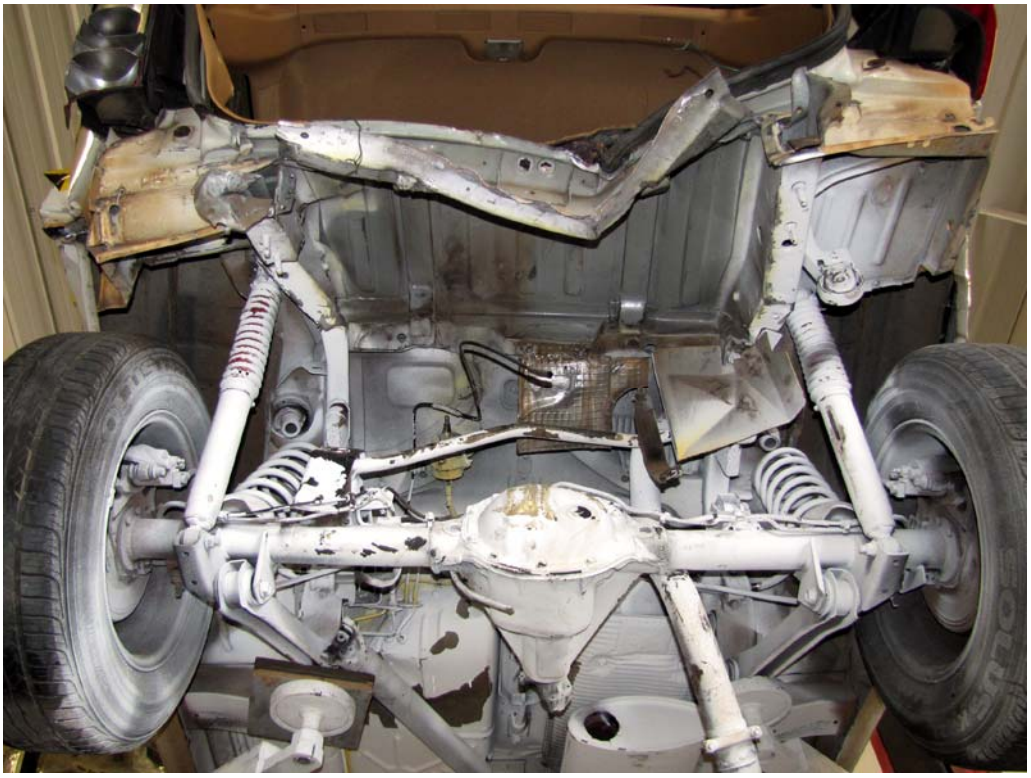

FIGURE 54. Post-Test Target Vehicle

FIGURE 55. Post -Test Target Vehicle, Fuel Tank

FIGURE 56. Post-Test Target Vehicle, Fuel Tank

FIGURE 57. Post -Test Target Vehicle, Fuel Tank

FIGURE 58. Post-Test Target Vehicle, Fuel Tank

FIGURE 59. Post -Test Target Vehicle, Fuel Tank

FIGURE 60. Post-Test Target Vehicle, Fuel Tank

APPENDIX B
INSTRUMENTATION DATA TRACES

TABLE OF DATA PLOTS

Plot		Page
1	Bullet Vehicle Center Tunnel X	B-1
2	Bullet Vehicle Center Tunnel Y	B-1
3	Bullet Vehicle Center Tunnel Z	B-1
4	Bullet Vehicle Center Tunnel Resultant	B-1
5	Bullet Vehicle Center Tunnel X Velocity	B-2
6	Target Vehicle Center Tunnel X	B-3
7	Target Vehicle Center Tunnel Y	B-3
8	Target Vehicle Center Tunnel Z	B-3
9	Target Vehicle Center Tunnel Resultant	B-3
10	Target Vehicle Center Tunnel X Velocity	B-4

Test Vehicle:	1988 Ford Taurus 4-Dr Sedan	Project No.:	P31070-01
Test Program:	40 MPH Rear Impact 30% Offset	Test Date:	5/16/11

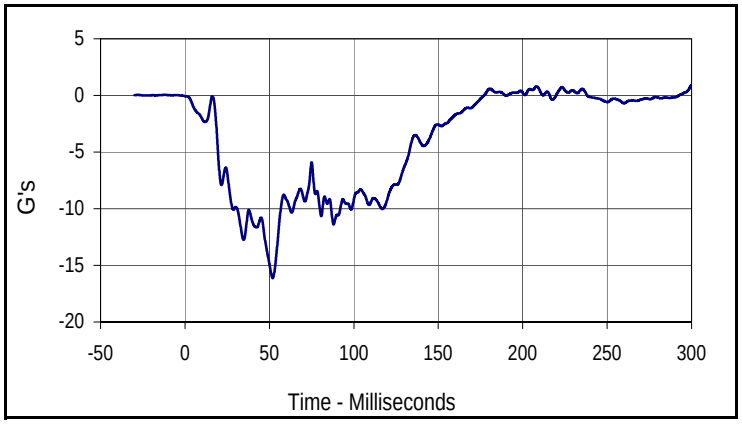

Curve Description			
Bullet Vehicle Center Tunnel X			
Plot	Type	SAE Class	Units
001	FIL	60	G's
Max	Time	Min	Time
0.9	299.9	-16.1	51.9

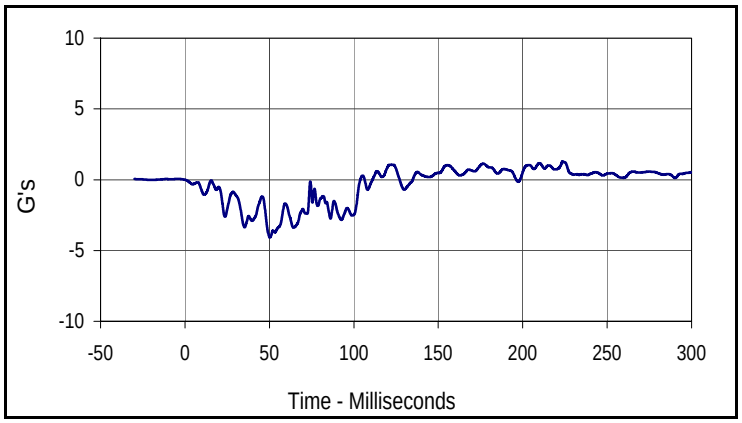

Curve Description			
Bullet Vehicle Center Tunnel Y			
Plot	Type	SAE Class	Units
002	FIL	60	G's
Max	Time	Min	Time
1.3	223.7	-4.1	50.3

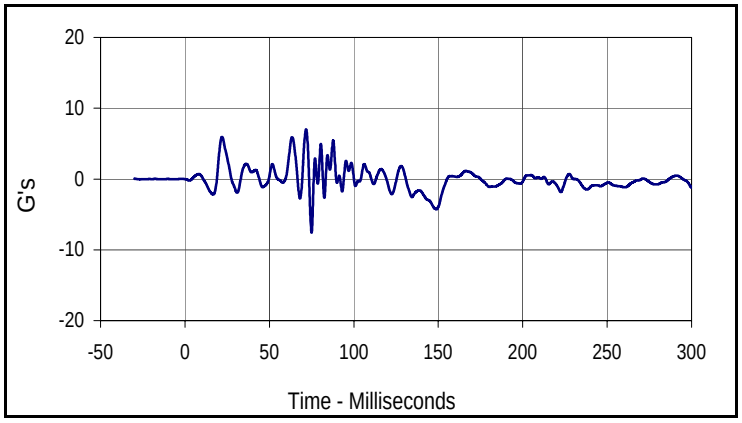

Curve Description			
Bullet Vehicle Center Tunnel Z			
Plot	Type	SAE Class	Units
003	FIL	60	G's
Max	Time	Min	Time
7.0	71.7	-7.6	75.0

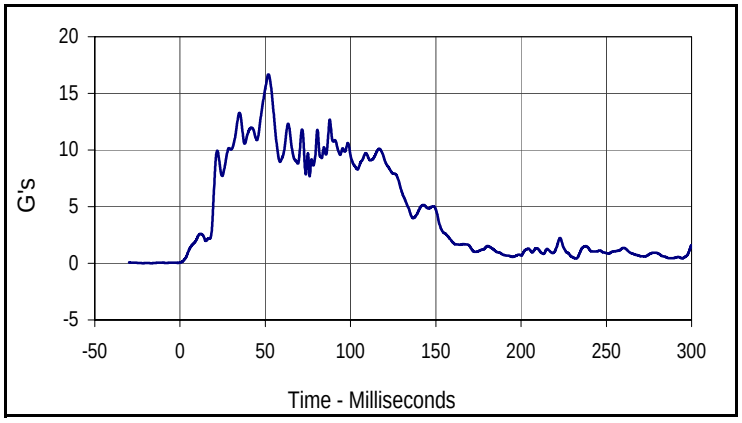

Curve Description			
Bullet Vehicle Center Tunnel Resultant			
Plot	Type	SAE Class	Units
004	RES	60	G's
Max	Time	Min	Time
16.7	51.9	0.1	0.0

Test Vehicle:	1988 Ford Taurus 4-Dr Sedan	Project No.:	P31070-01
Test Program:	40 MPH Rear Impact 30% Offset	Test Date:	5/16/11

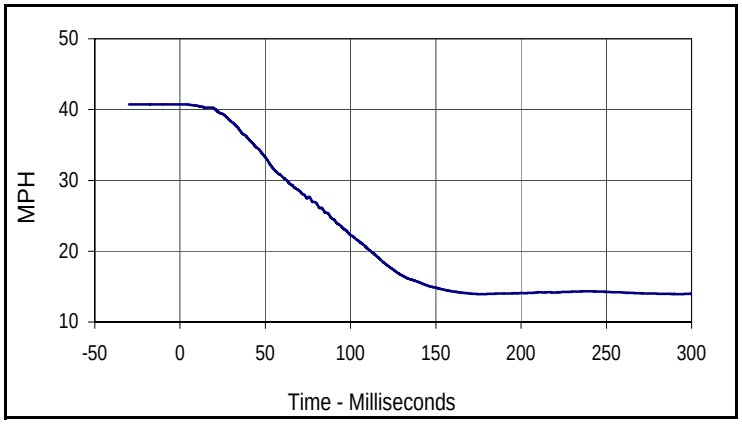

Curve Description			
Bullet Vehicle Center Tunnel X Velocity			
Plot	Type	SAE Class	Units
005	IN1	180	MPH
Max	Time	Min	Time
40.7	0.0	13.9	178.9

Test Vehicle:	1996 Jeep Grand Cherokee 5-Dr MPV	Project No.:	P31070-01
Test Program:	40 MPH Rear Impact 30% Offset	Test Date:	5/16/11

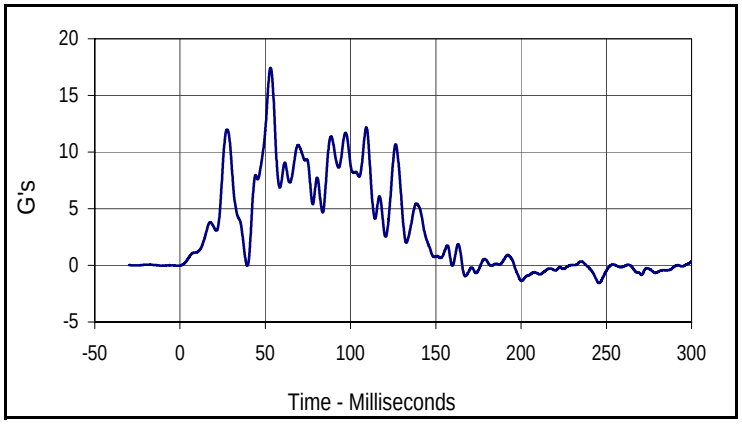

Curve Description			
Target Vehicle Center Tunnel X			
Plot	Type	SAE Class	Units
006	FIL	60	G's
Max	Time	Min	Time
17.4	53.1	-1.6	245.8

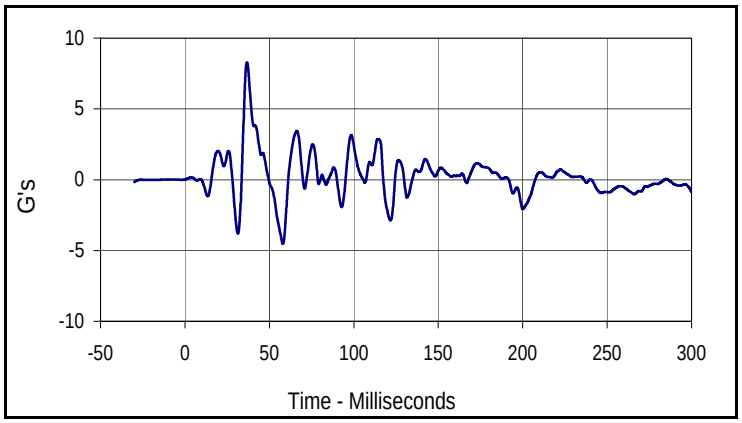

Curve Description			
Target Vehicle Center Tunnel Y			
Plot	Type	SAE Class	Units
007	FIL	60	G's
Max	Time	Min	Time
8.3	36.7	-4.5	58.0

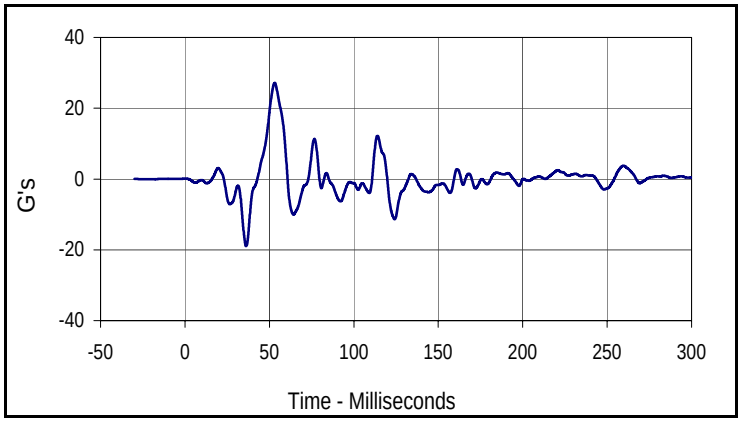

Curve Description			
Target Vehicle Center Tunnel Z			
Plot	Type	SAE Class	Units
008	FIL	60	G's
Max	Time	Min	Time
27.1	53.1	-18.9	36.3

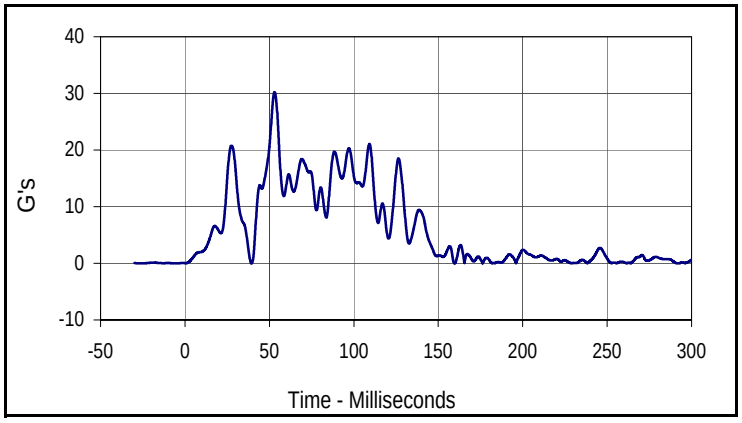

Curve Description			
Target Vehicle Center Tunnel Resultant			
Plot	Type	SAE Class	Units
009	RES	60	G's
Max	Time	Min	Time
30.2	53.1	0.0	291.3

Test Vehicle:	1996 Jeep Grand Cherokee 5-Dr MPV	Project No.:	P31070-01
Test Program:	40 MPH Rear Impact 30% Offset	Test Date:	5/16/11

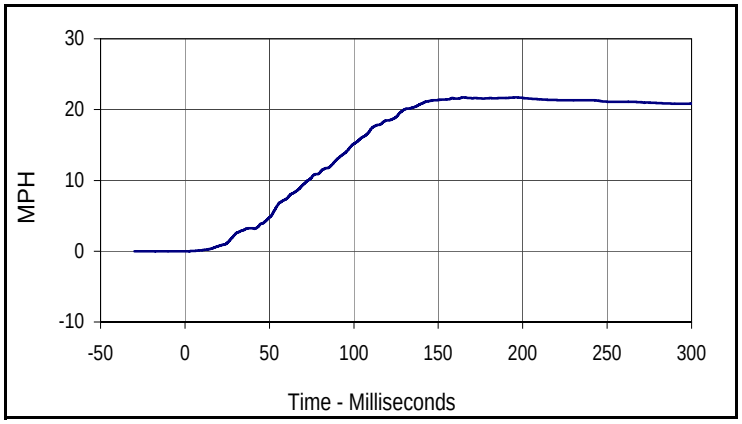

Curve Description			
Target Vehicle Center Tunnel X Velocity			
Plot	Type	SAE Class	Units
010	IN1	180	MPH
Max	Time	Min	Time
21.7	196.0	0.0	1.0

APPENDIX C
INSTRUMENTATION DATA CHANNEL ASSIGNMENTS

40 MPH Rear Impact 30% Offset
Instrumentation Data Channel Assignments
Vehicle Accelerometers
5/16/11
1988 Ford Taurus 4-Dr Sedan

CH.	LOCATION	AXIS	IDENT. NO.	DESCRIPTION	MFR	MODEL	UNITS
1	Vehicle Center Tunnel	X	J36724	Accel., Single Axis	Endevco	7264-2000	G
2	Vehicle Center Tunnel	Y	AR17	Accel., Single Axis	Endevco	7264-2000	G
3	Vehicle Center Tunnel	Z	AD99	Accel., Single Axis	Endevco	7264-2000	G

1996 Jeep Grand Cherokee 5-Dr MPV

6	Vehicle Center Tunnel	X	J24512	Accel., Single Axis	Endevco	7264-2000	G
7	Vehicle Center Tunnel	Y	BI14H	Accel., Single Axis	Endevco	7264-2000	G
8	Vehicle Center Tunnel	Z	J24533	Accel., Single Axis	Endevco	7264-2000	G

ATTACHMENT S *

EXPERT WITNESS REPORT - 2 January 2012 REVISION

Kline v. Loman Auto Group, Victoria Morgan-Alcala, et al.

Page Range 68

Pages 706 - 728

* Please also see Video file folder “Attachment S”

The Well-Known Issue of the Underride Accident Mode

Mr. Francois J. Castaing, former Executive Vice President over all Chrysler Engineering, and then-concurrent Product Executive over all Jeep products, periodically lauded internally and externally as the "Father of the ZJ" (the vehicle designation for the vehicle drive by Mrs. Susan Kline on the morning of February 24, 2007), was deposed on June 14, 2011. I was in-attendance at this deposition which took place, at defendant's demand, in Southfield, Michigan. He was asked the following questions at various times during his sworn testimony:

Q. *Okay. Now can you tell me whether or not the flat barrier test for the rear impact in 301 evaluates what happens in an underride impact?*

A. *I don't -- I'm not sure I understand the term "underride".*

Q. *Okay. Can you tell me whether or not, as you understand the 301 rear impact test, it evaluates at all what happens in an underride impact that we've just now described?*

A. *I don't think it does.*

Q. *Tell me what was done to assure fuel system integrity for the Jeep Grand Cherokee in an underride rear impact?*

A. *It would be pure speculation on my part to discuss that. I don't know.*

Q. *Well, Mr. Castaing, you indicated that you were the head of Jeep/Truck Engineering and were deeply involved in the ZJ, were you not?*

A. *Yeah.*

Q. *Well, if you want to look at the earlier Exhibit 8, I think, the exhibit authored in 1978, some 10 years or so before the ZJ was -- Exhibit 7, I'm sorry.*

A. *Yeah, I understand. I understand what underride means in the sense that there is a car that's lower than another one bump into the first one. I understand that.*

Q. *So the question is: Was underride testing feasible during the time period that the ZJ was being developed?*

A. *In principal, probably.*

As I have already testified in open court in this case, as I have already reported in my Expert Witness Report - First Revision of 28 April 2011, as I reported in my letter to the Center for Auto Safety of June 1, 2010 while referencing the 1978 'Baker Memo' (Attachment I), the issue of the underride crash mode is a well-known to anyone remotely connected to the automobile industry. Knowledge of this mode also extends to groups only tangentially connected to automotive safety. It is important to this litigation that examples of that extension be presented to the Honorable Court and its members.

1) The National Highway Traffic Safety Administration (NHTSA) Fatal Accident Report forms list underride as an accident choice. This FARS form has been used since the time of the 1978 Baker Memo, at the same time NHTSA recalled the Ford Pinto for its defective fuel tank (Please see sub-attach).

2) The Society of Automotive Engineers (SAE), which both Mr. Castaing and I were/are members, routinely writes of the underride accident mode as a serious safety issue.

3) The police departments are all able to forthrightly explain what is meant by the term underride. As one example of police experience, I offer to the Honorable Court and its members the following video:

http://www.youtube.com/watch?v=BCuo99ymQPw

Note that in this underride accident no fuel tank undergoes direct impact. That is because the offending vehicle, a Toyota Camry which uses unibody construction, has a fuel tank that is located in front of the rear axle. As you can see, no fire ensued despite this severe underride accident.

(I emphasize the unibody construction issue because in his testimony Mr. Castaing insinuated that the reason he located the ZJ-Body Jeep Grand Cherokee fuel tank behind the axle, in the crash zone, was due to vehicle unibody construction methodology. To be clear/sure, there is no connection between base vehicle construction methodology and (broad) fuel tank location/engineering decisions. The full size Dodge Ram Van is an example wherein despite being a unibody, and originally having a fuel tank located behind the rear axle, its fuel tank was relocated to the middle in front of the axle (in 1995) without any changes to its construction methodology.)

4) Relevant to this litigation is awareness of underride among automobile insurance companies. As examples, I offer the Honorable Court and its members the following two videos:

http://www.youtube.com/watch?v=16YDF213Igk

In this video a Toyota Camry undergoes hard braking just before rear collision with a Dodge Durango SUV. Note that the mismatch between the Camry and Durango bumpers provokes underride. In this instance, there is no danger of direct impact with a fuel tank since the Durango fuel tank is located in front of the rear axle. I emphasize that the Durango was based on the AN-Body vehicle, which was an iteration of the N-Body that was used to construct the Dodge Dakota pickup truck; a frame-on-body construction methodology such as the Ford Explorer. If Mr. Castaing had not prevailed, and the 1993 SUV was based on the N-Body rather than the ZJ-Body, the fuel tank, per the Baker Memo of 1978, would have been located in front of the rear axle. The Durango which has a mid-mounted fuel tank was delayed until introduction in 1998.

At 0:26 in this second video a Ford Taurus collides with a 1996 ZJ-Body Jeep Grand Cherokee:

http://www.youtube.com/watch?v=0XRRQsNPShY

This video depicts underride at merely 5mph, therefore the fuel tank was not contacted. But unlike this demonstration of minor low speed damage, when the collision speed of a Ford Taurus or a Toyota Sienna minivan is raised to merely 40mph, as tested at Karco Engineering, LLC on 16 May 2011, the foreseeable results include direct collision with and catastrophic failure of the fuel tank (Attachment R).

5) The issue of underride is common knowledge among defense experts. Defendant's expert Dr. Nicholas J. Durisek openly admits in his report of March 14, 2011 that the accident that resulted in the death of Mrs. Susan Kline was an *"underride impact."* I anticipate that the reality that underride is a long-standing well-known accident mode will be fully reviewed at the time of trial.

78V-143 (01)

Ford Motor Company

The American Road
Dearborn, Michigan 48121

June 15, 1978

Office of Defects Investigation
National Highway Traffic Safety
Administration
400 Seventh Street, S. W.
Washington, D. C. 20590

Re: 1971-1976 Pinto and 1975-1976 Bobcat
Fuel Systems (Except Station Wagons)
Campaign No. 293

As the Administration is aware, Ford Motor Company has decided to recall 1971-1976 Pinto and 1975-1976 Bobcat sedans and 3-door Runabout models for modification of fuel systems despite our disagreement with the agency's initial determination that there is an unreasonable risk to safety involved in the fuel tank design and structural characteristics of these cars.

The information set forth below is being transmitted in accordance with the requirements of Part 573 of Title 49, Code of Federal Regulations -- Defect Reports.

Campaign 293

Identifying classifications of vehicles

1971-1976 Pinto and 1975-1976 Bobcat sedans and 3-door Runabout models.

Total number of vehicles potentially affected

We have estimated that 1.4 million Pintos and Bobcats are in operation in the United States and other areas covered by the Safety Act. Final numbers will be forwarded when available.

Estimated percentage of the potentially affected vehicles

100 percent.

78V-143 (02)

Deputy Administrator's description of defect

In a letter dated May 8, 1978, the Deputy Administrator of the National Highway Traffic Safety Administration informed Ford that "...analysis of information received and developed indicates that the fuel tanks and filler necks installed on these vehicles are subject to failure when the vehicles are struck from the rear. Such failure can result in fuel leakage, which in the presence of external ignition sources can result in fire." and "Based on our investigation, it has been initially determined that a defect which relates to motor vehicle safety exists in these 1971-1976 Ford Pintos and 1975-1976 Mercury Bobcats (except station wagons)."

Chronology of principal events that were the basis for the determination

The principal events leading to the Deputy Administrator's determination are presumably contained in the NHTSA file -- Case Number C7-38.

Repair Measures

Vehicles will be modified by replacement of the existing fuel filler pipe and seal with a longer pipe and an improved seal and by installation of a polyethylene shield on the front of the fuel tank.

Copies of dealer and owner letters will be forwarded when issued by Ford Parts and Service Division.

Very truly yours,

J. C. Eckhold
Director
Automotive Safety Office

gw

78V-143

S. P. Geoffrey
Service Engineering
Office Manager
Ford Parts and Service Division

Ford Motor Company
P.O. Box 3077
Livonia, Michigan 48151

August, 1978

Dear Pinto or Bobcat Owner:

This notice is sent to you in accordance with the requirements of the National Traffic and Motor Vehicle Safety Act. The National Highway Traffic Safety Administration has determined that a defect which relates to motor vehicle safety exists in 1971-1976 Ford Pinto and 1975-1976 Mercury Bobcat sedan and 3-door Runabout models. The Administration's defect determination does not apply to station wagons or to 1977 and later model Pintos and Bobcats of any model. The Administration concluded that the defect involves an unreasonable risk of substantial fuel leakage in low to moderate speed rear-end collisions as a result of disconnection of the fuel filler pipe from the tank or punctures in the forward face of the fuel tank. In the presence of an ignition source, fuel leakage can, of course, result in a fire that endangers persons in or near the vehicle.

In response to the Administration's determination, Ford Motor Company has decided to offer to owners of the vehicles in question, free of charge, fuel system modifications designed to reduce the possibility of substantial fuel leakage due to fuel filler pipe disconnection or punctures in the forward face of the fuel tank as a result of a low to moderate speed rear-end collision. The principal modifications will consist of replacement of the fuel filler pipe and seal with a longer pipe and an improved seal and the addition of a polyethylene shield in front of the fuel tank. These new components are similar in function to ones developed for installation in 1977 and later-model Pintos and Bobcats to help them meet Federal rear-impact test requirements first applied to 1977-model passenger cars. Although the modifications will not make the earlier-model cars equal to the 1977 and later models in meeting the Federal standard, they will significantly reduce the possibility that a low to moderate speed rear-end collision would

cause the fuel filler pipe to separate from the fuel tank or that the front of the fuel tank would be punctured if pushed against the rear axle.

The fuel filler cap on your car also will be modified to incorporate a new inner assembly, unless you have a locking or aftermarket filler cap. Caps of those types will be replaced with an attractive, non-locking, chrome cap at no charge to you. Your locking or aftermarket filler cap will be returned to you, but we recommend in the interest of your safety that it not be reinstalled on this vehicle.

We urge that you have these important safety modifications made to your car. Please contact an authorized Ford or Lincoln-Mercury dealer of your choice on or after September 11, 1978 to make arrangements for your car to be modified. Although the time required to install the parts will be less than one hour, we suggest that you first contact your dealer to arrange for an appointment.

The enclosed form identifies your vehicle and should be presented to the dealer as it authorizes him to modify your vehicle at no charge to you. The dealer will return the form to us verifying that the modification to your vehicle has been performed.

Should you have any questions relative to this offer, please contact a Ford or Lincoln-Mercury dealer, or the nearest Ford Parts and Service Division District Office, the address of which is available from any Ford or Lincoln-Mercury dealer.

If you are unable to have the modification carried out on a timely basis and without charge, please complete the appropriate area on the enclosed prepaid postcard and mail it to us immediately. If you should find that you are still unable to have the modification completed promptly and without charge, you may wish to report that fact to the Administrator, National Highway Traffic Safety Administration, Washington, D. C. 20590.

If you no longer own the vehicle identified on the form, please fill out the appropriate area on the enclosed prepaid postcard and mail it to us so that we may adjust our records accordingly.

Sincerely,

S. P. Geoffrey
Service Engineering Office Manager

Enclosures

78V-143

SERVICE RECALL BULLETIN

IMPORTANT Ford Parts and Service Division

All Service Personnel Should Read and Initial

Ford No. 293

L/M No. 293

Date August 1978

To: All Ford and Lincoln-Mercury Dealers

Subject: Service Recall 293, Announcement of a Recall of 1971-76 Pinto and 1975-76 Bobcat 2-Door Sedans and 3-Door Runabouts for Fuel System Modifications.

As you were informed in a communication dated June 9, 1978, from Mr. C. V. Barion, General Manager, Ford Parts and Service Division, the National Highway Traffic Safety Administration has determined that a defect which relates to motor vehicle safety exists in 1971-76 Pinto and 1975-76 Bobcat 2-door sedans and 3-door runabouts. The Administration's defect determination does NOT apply to station wagons or to 1977 and later model Pintos and Bobcats. The Administration concluded that the defect involves an unreasonable risk of substantial fuel leakage in low to moderate speed rear-end collisions as a result of disconnection of the fuel filler pipe from the tank, and/or punctures in the forward face of the tank. In the presence of an ignition source fuel leakage can, of course, result in a fire that endangers persons in or near the vehicle.

In response to the Administration's determination, Ford Motor Company will offer to owners of the vehicles in question, free of charge, fuel system modifications designed to reduce the possibility of substantial fuel leakage due to these factors. The modifications will consist of replacement of the fuel filler pipe, filler pipe seal, fuel cap diaphragm and cup assembly, installation of a polyethylene shield assembly in front of the fuel tank and fuel tank mounting strap reinforcements.

It is apparent that the recent adverse publicity surrounding these vehicles has created a great deal of customer concern. Therefore, it is in the customers', dealers' and Company's best interest to meet this concern by completing these modifications as quickly as possible, giving first priority to units in customer service.

To facilitate that effort, the Company will be making direct shipments of parts to you at the outset of the recall as described in the "Parts Availability and Ordering Information" portion of this bulletin. In addition, the listing of units for which

your dealership has completion responsibility will include names of registered owners of older model units believed to be in your vicinity, as described below under "Notification". It is hoped that these actions will enable dealers to more efficiently complete these modifications.

PLEASE READ THIS BULLETIN IN ITS ENTIRETY AND CIRCULATE IT TO YOUR PARTS AND SERVICE PERSONNEL. ANY QUESTIONS REGARDING ITS CONTENT SHOULD BE DIRECTED TO YOUR FORD PARTS AND SERVICE DISTRICT OFFICE.

NOTIFICATION

The owners of vehicles affected by this recall are being notified directly by First Class Mail, a process expected to begin the week of August 21, 1978.

Your follow-up list of owner names and addresses differs from past practice in that it is not solely based on units invoiced to your dealership. It also uses state registration records and established groupings of postal zip codes to produce a listing of units believed to be currently in your immediate vicinity. Because of our need to properly develop the list, you will receive it in two parts.

The first portion includes owner names and addresses for units originally invoiced to your dealership which registration records indicate to be still at the same location. It also includes units which you may not have sold, but which registration records indicate have the same zip code as your dealership. (Registration data from Oklahoma and Arkansas have not been processed at this time).

The second portion, to be mailed to you in about six weeks, will contain units which registration records indicate are close to your dealership, based on proximity of zip codes, and units originally invoiced to your dealership for which no registration records currently exist. (Oklahoma and Arkansas registration data will be included.)

You should use these lists in an active follow-up effort, recording all completions in your Recall Organizer which was mailed to you in June.

Eligible vehicles other than those on the lists provided may be brought to your dealership by their owners for modification. Those units also are to be modified as promptly as possible. If the owner of any eligible vehicle does not have a Customer Notification and Dealer Claim Form (FCS 1864), a blank 1864 should be completed by you and sent in for reimbursement.

Under Federal law owners must be told how to inform the N.H.T.S.A. if the modifications are not accomplished without charge within a reasonable time after the vehicle is brought in. This has been done in the owner letter. Also, you must promptly report to your Zone Manager or District Recall Coordinator any instance of an owner not allowing you to complete this recall due to scheduling or any other reason.

TECHNICAL INSTRUCTIONS

General Safety Instructions

- Observe proper safety precautions when handling flammable liquids.
- To drain the fuel tank use a tanker defueler/refueler, such as a Rotunda fuel storage tanker model 340002, or an equivalent.

Modification Instructions

The following procedures are to be used to modify fuel systems on vehicles subject to this recall. The procedures include both installation of, and revisions to, certain fuel system components.

NOTE: FUEL TANKS ARE NOT TO BE LOWERED NOR SUPPORT STRAPS LOOSENED IN PERFORMING THESE MODIFICATIONS.

Component and kit part numbers are listed for reference in Attachment I.

Fuel Tank Shield and Support Bracket Installation:

1. Place the vehicle on a hoist. Drain the fuel tank completely, raise the hoist and remove the left rear tire.

2. Install fuel tank shields (9B007) and support brackets (9B224) as follows:

   For 1971-73 vehicles - Install the right hand bracket over the fuel tank strap through the slot in the support member with the bracket on the forward side of the strap. Position the flat fuel tank support bracket shield (9B007-C) on the right hand side only as shown in Attachment II. Install the left hand bracket over the end of the strap with the bracket between the tank and strap. Install the U-bolt through the left hand bracket from the rear of the bracket. Install the formed fuel tank shield (9B007-A) on the left hand U-bolt holes as indicated on the shield. Install plate on left hand U-bolt and thread nuts. Complete the installation as shown in Attachments II, III and IV by installing the U-bolt around the rear of the right hand strap and through the shield and bracket (no plate required for right hand U-bolt).

   NOTE: On 1971-72 vehicles bend fuel tube as required for clearance to U-bolt.

   For 1974-76 vehicles - Install the right and left hand brackets on the forward side of the strap as shown in Attachment II. The left hand strap must be pushed toward the back of the slot to allow installation of the bracket. Position the fuel tank support bracket shield (9B007-C) on the right hand side only as shown in Attachment II. Install the fuel tank shield (9B007-A) as shown in Attachments II and III, using the left hand holes indicated for 1974-76 (the 9B223 plate is not used for shield installation on these vehicles).

   NOTE: 1975 vehicles with dual exhaust require a unique fuel tank shield (9B007-A) as shown in Attachment V. On all 1971-76 vehicles the fuel tank support bracket shield (9B007-C) is installed on the right hand side only and between the fuel tank strap and fuel tank shield (9B007-A).

3. Torque U-bolt nuts to 80-90 in-lbs.

   NOTE: Nuts must be bearing against the bracket or plate.

4. Attach bolt service part number (58819-S2), flat washer service part number (382598-S2) and nut service part number (55738-S2) to the strap support member on the left hand side of 1971-73 vehicles. On 1974-76 vehicles the above bolt, washer and nut are attached to both right hand and left hand sides of support member. Refer to Attachment VI.

   NOTE: If the existing strap support member attaching bolt is not located at the square end of the slot in the support member, relocate the bolt toward the square end making sure square shoulder of the bolt (58819-S2) is in the slot. Torque to 20-30 ft. lbs.

5. Upon completion of the fuel tank shield and fuel tank mounting strap reinforcement installation, proceed with installation of the fuel tank filler pipe.

Fuel Tank Filler Pipe Installation:

NOTE: UNDER NO CIRCUMSTANCES ARE FILLER PIPES FOR LEADED FUEL VEHICLES (LACK OF RESTRICTOR) TO BE INSTALLED ON VEHICLES EQUIPPED WITH RESTRICTED FILLER NECKS OR OTHERWISE DESIGNATED AS "UNLEADED FUEL ONLY" VEHICLES.

1. Lower the vehicle for filler pipe installation.

2. Remove filler cap and retain for modification as described below.

3. Remove and retain (3) existing sheet metal screws attaching the fuel filler pipe to the quarter panel. Remove the filler pipe (9034). Remove the fuel tank filler pipe seal (9072) from the fuel tank. Apply a small amount of lubricant (SAE 10W-40 engine oil or petroleum jelly) to the outer diameter of the new seal and install with the small diameter in the tank as shown in Attachment VII. Discard the filler pipe and seal which were removed, but retain the filler cap for modification as described below.

4. To contain fuel vapors and to keep the fuel tank clean, place body tape over the opening in the tank to seal it completely.

5. Align the (2) holes identified with "T" in the reinforcement (9B211) with (2) of the (3) existing holes in the fuel filler pipe opening in the quarter panel. The word "UP" should be visible from outside the vehicle and indexed as indicated in Attachment VIII. Install (2) of the (3) existing 9/32" sheetmetal screws removed in Step 3 above to hold the reinforcement in place.

6. Drill (4) 5/16" diameter holes in the quarter panel using the reinforcement as a template. If fuel vapors are present, DO NOT use electric drill until vapors can be dispersed.

7. Remove and discard the (2) screws attaching the reinforcement to the quarter panel opening, and remove the reinforcement. Remove all metal protruding from the existing mounting holes in the quarter panel opening. The back mounting surface of the quarter panel opening must be free of all burrs.

8. Remove the body tape from the fuel filler pipe opening in the tank. Apply a small amount of lubricant (SAE 10W-40 engine oil or petroleum jelly) to the inside circumference of the seal and insert the new filler pipe (9034) directly into the tank from inside the left rear wheel well. (Do not attempt to install the pipe through the quarter panel opening).

9. Install the new gasket (9076) on the fuel filler pipe flange and rotate the new filler pipe into position so that the opening of the pipe protrudes slightly through the quarter panel opening, and the flange is on the inside of the quarter panel. (Temporarily place tape over filler tube upper end to prevent entrance of dirt during installation of tube).

10. Align the reinforcement (9B211) with the previously drilled 5/16" diameter holes in the quarter panel opening. Refer to Step 6. Be sure that the gasket (9076) and filler pipe flange are also aligned with the drilled holes. Secure the entire assembly to the outside quarter panel opening with (4) screws (388275-S2).

NOTE: Ford Special Service Tool D78P-9002-A supplied with this notification package, or other similar tool, should be used to tighten these 4 screws. Also, alternate screw (55914-S2) as noted in Attachment I may be used.

11. Install the left rear wheel and lower the hoist.

Fuel Filler Pipe Cap Replacement:

For non-locking original equipment fuel filler pipe cap replacements, (see Attachment IX), remove the (2) existing screws which attach the diaphragm and cup assembly, and install the new diaphragm and cup assembly (9B075) in the existing shell using (2) new screws (51755-S36).

If the cap is a locking or other aftermarket cap, it is to be replaced. (See Attachment IX). Remove the cap from the filler pipe and place it in the passenger compartment of the vehicle. Assemble the new diaphragm and cup assembly (9B075) to the new filler cap shell and handle kit (9030).

Carefully replace the fuel removed earlier from the fuel tank.

Install the new or revised filler cap.

At this point the procedure is completed.

NOTE: The filler cap shell and handle kit is not part of the single-pak modification kit. They are available on a "No Charge" basis. See "Special Dealer Instructions" below for suggested ordering procedures.

SPECIAL DEALER INSTRUCTIONS

1. For units that have a locking fuel filler cap or an aftermarket cap of any type, after performing the modification outlined in the "Technical Instructions" above, you should inform the owner that the new cap, as installed, is designed for the fuel system and should not be replaced.

   Because of the unknown number of units having locking/aftermarket filler caps (believed to be a small percent of the total), the shell and handle are not included in the individual repair kits. Some dealers, who will be receiving five-pak kits on a direct ship basis during the early stages of the campaign, will have one shell and handle kit (9030) per five-pak. All dealers are encouraged to maintain a stock of these parts to avoid delays in completing the modifications to these units.

2. If you encounter a unit that requires additional repair for satisfactory installation of the modification (e.g. a fuel tank strap, fuel tank or fuel line in need of replacement, or exterior sheetmetal corrosion sufficient to preclude attachment of the new filler pipe to the quarter panel), please contact your District Office for assistance. Under no circumstances are owners to be denied the fuel system modification because of the requirement for additional repairs of this sort.

3. If you encounter a unit with collision damage which interferes with proper installation of the modification components (e.g. a damaged quarter panel), you should have the owner seek repairs to the vehicle prior to undertaking the modification. If the owner refuses, you should return the 1864 Form so noted and signed by authorized dealership personnel. If the owner later has the damage repaired and returns for the modification, you should install the modification and complete a blank 1864 Form for reimbursement. Installation of only part of the fuel system modification is NOT to be done.

PARTS AVAILABILITY AND ORDERING INFORMATION

To permit a rapid launch and sustained effort in performing this recall, the following parts distribution plan has been established:

All parts necessary to perform the modification will be packaged in kit form (except the 9030 shell and handle kit as noted earlier). Two types of kits will be used - single-pak and five-pak with five-pak used only for direct shipment, and not available for dealer order.

Initial Recall emphasis will be on 1971-74 Pintos.

Ford dealers will be sent direct shipments of the D1FZ-9B007-B and BPK kits described below for these vehicles beginning September 6, 1978 and continuing for approximately four weeks. Direct shipments will be billed to the dealer's parts statement, with reimbursement being handled as described below.

Ford and Lincoln-Mercury dealers will receive direct shipments of kits for 1975-76 Pinto and Bobcat vehicles (Part No. D5FZ-9B007-C and CPK) in advance of notification of those owners - expected to be in early October, 1978.

Additional kits that are required beyond these direct shipments should be ordered from your Facing Parts Distribution Center to assure that adequate inventories are maintained.

Lincoln-Mercury dealers who anticipate receiving initial demand for modification of 1971-74 Pintos should order the D1FZ-9B007-B kit now from their Facing Parts Distribution Centers on a "Unit Down" basis.

PARTS

Part Number	Description	Class	Dealer Net	Kit Code
D1FZ-9B007-B	Fuel system modification kit - shield assembly, filler pipe, filler pipe seal, filler cap diaphragm and cup, attaching hardware (1971-76 leaded fuel single exhaust and '76 leaded fuel dual exhaust)	AG	$22.03	B
D5FZ-9B007-C	Same content - for 1975 unleaded fuel single exhaust and all 1976 unleaded fuel	AG	$21.83	C

NOTE: Because some 1976 unleaded fuel, V-6 engine units may be equipped with dual exhausts, dealers are advised to examine all these vehicles prior to modification. If these vehicles have dual exhausts, they are to receive kit D5FZ-9B007-D. If they have a single exhaust, they are to receive kit D5FZ-9B007-C.

D5FZ-9B007-D	Same content - for 1975 unleaded fuel duel exhaust	AG	$23.78	D
D5FZ-9B007-E	Same content - for 1975 leaded fuel dual exhaust (Canadian & Export)	ZC	$23.78	E
D1FZ-9B007-BPK	Five-Pak Kit for 1971-76 leaded fuel single exhaust and 1976 leaded fuel dual exhaust	Not Avail. for Dealer Order	$110.15	B

D5FZ-9B007-CPK	Five-Pak Kit for 1975 Unleaded fuel single exhaust and all 1976 unleaded fuel	Not Avail for Dealer Order	$109.15	C
D1FZ-9030-B	Fuel tank filler cap shell and handle kit	AG	No Charge	

DISPOSITION OF EXISTING STOCK

Refer to Attachment X for disposition of existing service stock.

Obsolete filler pipes can be returned for credit to your facing Parts Distribution Center. Identify each returned filler pipe with an FP-718 tag, and forward an FPS-340 Claim with the parts using Code 7B-"other". The FP-718 tag and FPS-340 Claim must include the following" "Obsolete Filler Pipes - Service Recall 293".

LABOR

Operation	Time	Insert on 1864 Claim in Box
Perform Fuel System Modification	0.8 Hr.	B
Administrative Allowance	0.1 Hr.	

The 0.1 hour administrative allowance must be added to the appropriate labor allowance before entering the total labor time in the correct box.

NOTE: RETURN COMPANY CLAIM COPY NO. 2 FOR REIMBURSEMENT.

REPORTING

Upon completion of the required modification, please return the second copy of the Form 1864 completely filled out and signed by authorized dealer personnel. Only the Form 1864 will be accepted for claims on this recall. Any problems encountered with this recall should be discussed with your Parts and Service Zone Manager.

We appreciate your cooperation in completing this recall as quickly as possible.

S. P. Geoffrey
Service Engineering Office Manager

Attachments
Enclosures

1971-76 PINTO/BOBCAT FUEL SYSTEM REPLACEMENT COMPONENTS

Component Part Name	Part Number	1971-76 Leaded Sng. & 76 Leaded Dual Exh. (D1FZ-9B007-B)	1975 Single Exh. All 1976 Unleaded (D5FZ-9B007-C)	1975 Dual Exhaust Unleaded (D5FZ-9B007-D)	1975 Dual Exhaust Leaded 240 Units (D5FZ-9B007-E)
Pipe Assembly - Fuel Tank Filler	D5FZ-9034-E D5FZ-9034-F	1	1	1	1
Reinforcement - Fuel Tank Filler Pipe Flange	D1FZ-9B211-A	1	1	1	1
Shield - Fuel Tank Formed	D1FZ-9B007-A D5FZ-9B007-A	1	1	1	1
Bracket - Fuel Tank Shield Support	D1FZ-9B224-A	2	2	2	2
Plate - Fuel Tank Shield Support Bracket	D1FZ-9B223-A	1			
Seal - Fuel Tank Filler Pipe	D7DZ-9072-A	1	1	1	1
Gasket - Fuel Filler Pipe to Panel	D7FZ-9076-A	1	1	1	1
**Screw-Pan Head 1/4" - 14x3/4" Bolt - "U" 1/4" - 20x1-3/4" Nut - Hex 1/4" - 20	388275-S2 D1FZ-9A010-A 33777-S8	4 2 4	4 2 4	4 2 4	4 2 4
Diaphragm & Cup Assembly - Fuel tank Filler Cap Screw - #8 - 32x3/8 pan head	D80C-9B075-AA 51755-S36	1 2	1 2	1 2	1 2
*Fuel Tank Filler Cap Shell and Handle Kit	D1FZ-9030-B	***			
Bolt - Carriage 3/8" - 16x1" Washer - flat 1/2 ID x 1-1/2 OD Nut - Hex Locking	58819-S2 382598-S2 55738-S2	2 2 2	2 2 2	2 2 2	2 2 2
Shield - Fuel Tank Flat Support Bracket	D1FZ-9B007-C	1	1	1	1

* To replace locking and after market cap as required.
**When special driver (such as: Ford Special Tool No. D78P-9002-A) is not available, use 55914-S2 screw - hex head 1/4" - 14x 3/4".
*** One Per Five-Pak version of this kit

FUEL TANK SHIELD SUPPORT BRACKET LOCATIONS

ATTACHMENT II
RECALL 293

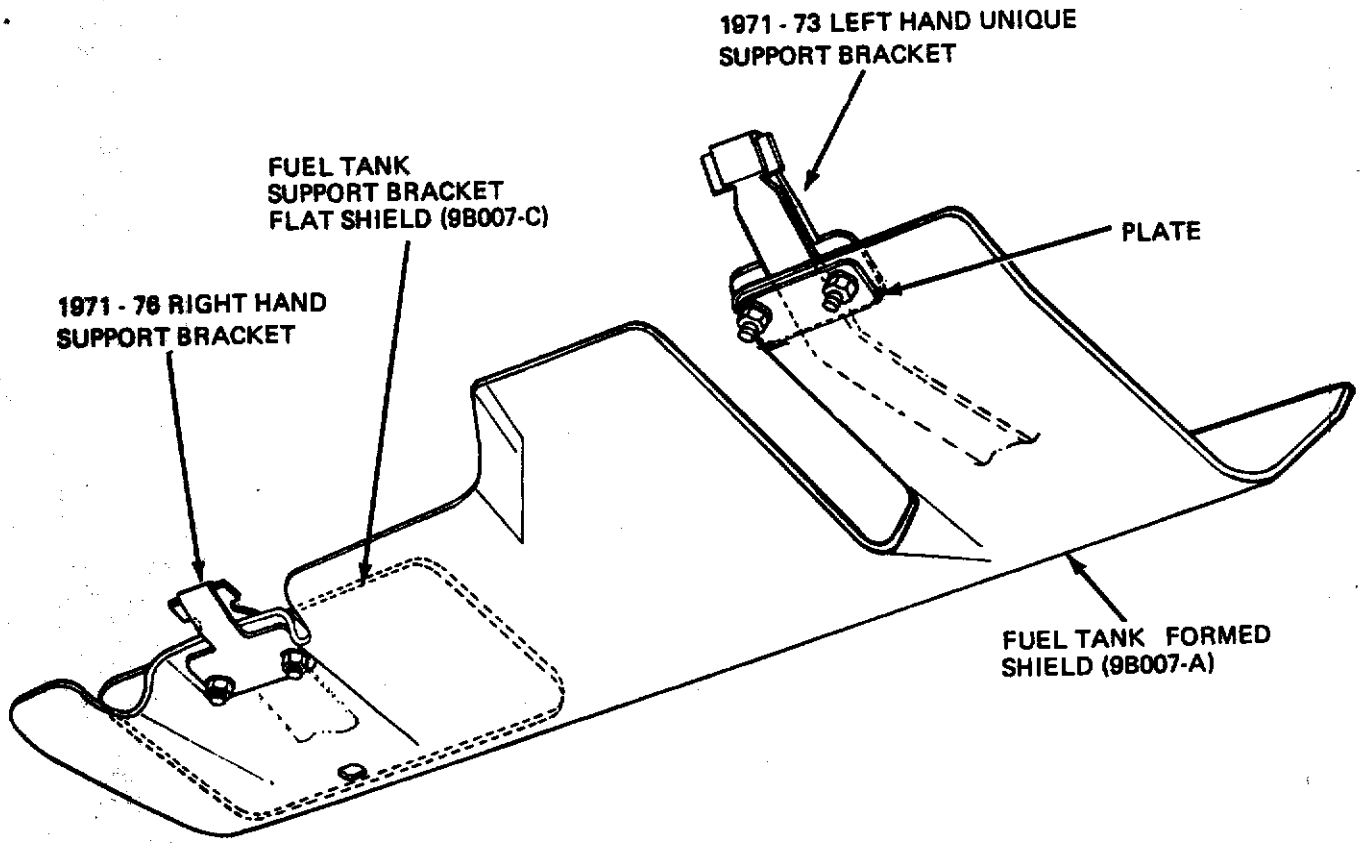

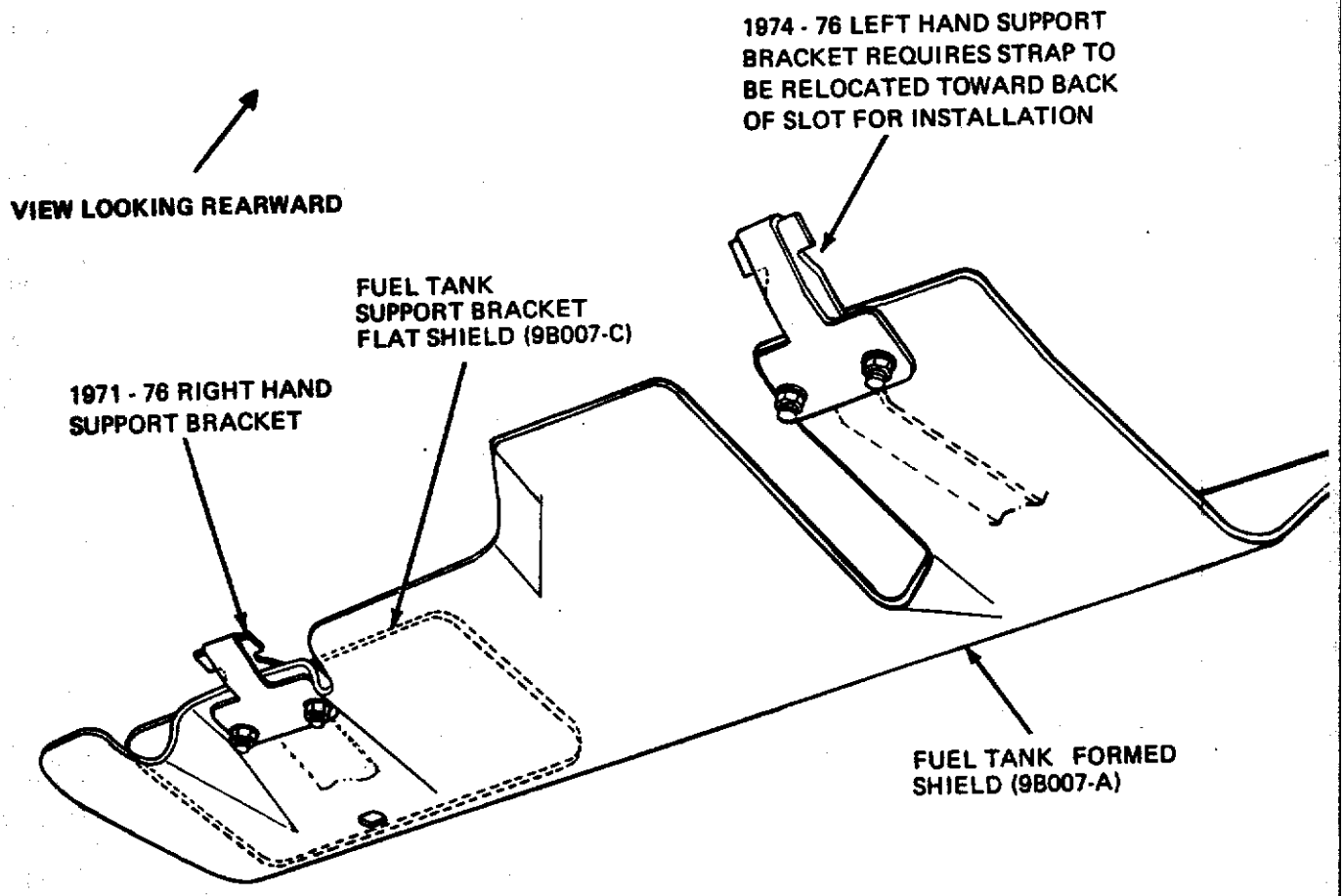

NOTE: PROPER LOCATIONS OF BRACKETS ON SHIELD AFTER SHIELD IS INSTALLED

I.S. NO. 4762

(FOR REFERENCE ONLY)

1971 - 1976 RIGHT HAND FUEL TANK SHIELD SUPPORT INSTALLATION

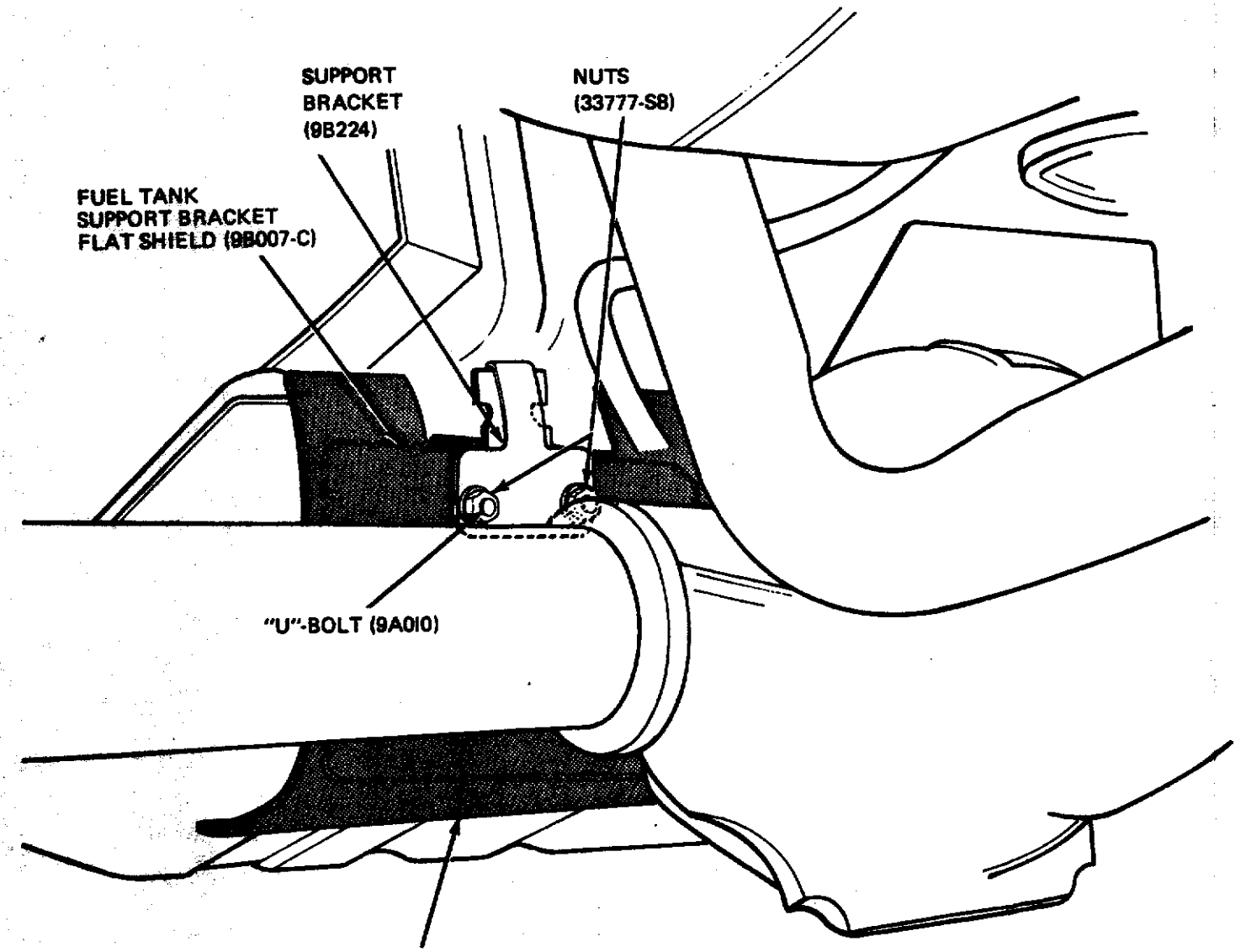

VIEW LOOKING REARWARD UNDER RIGHT HAND SIDE OF VEHICLE

**1971 - 1973 LEFT-HAND FUEL TANK
SHIELD SUPPORT INSTALLATION**

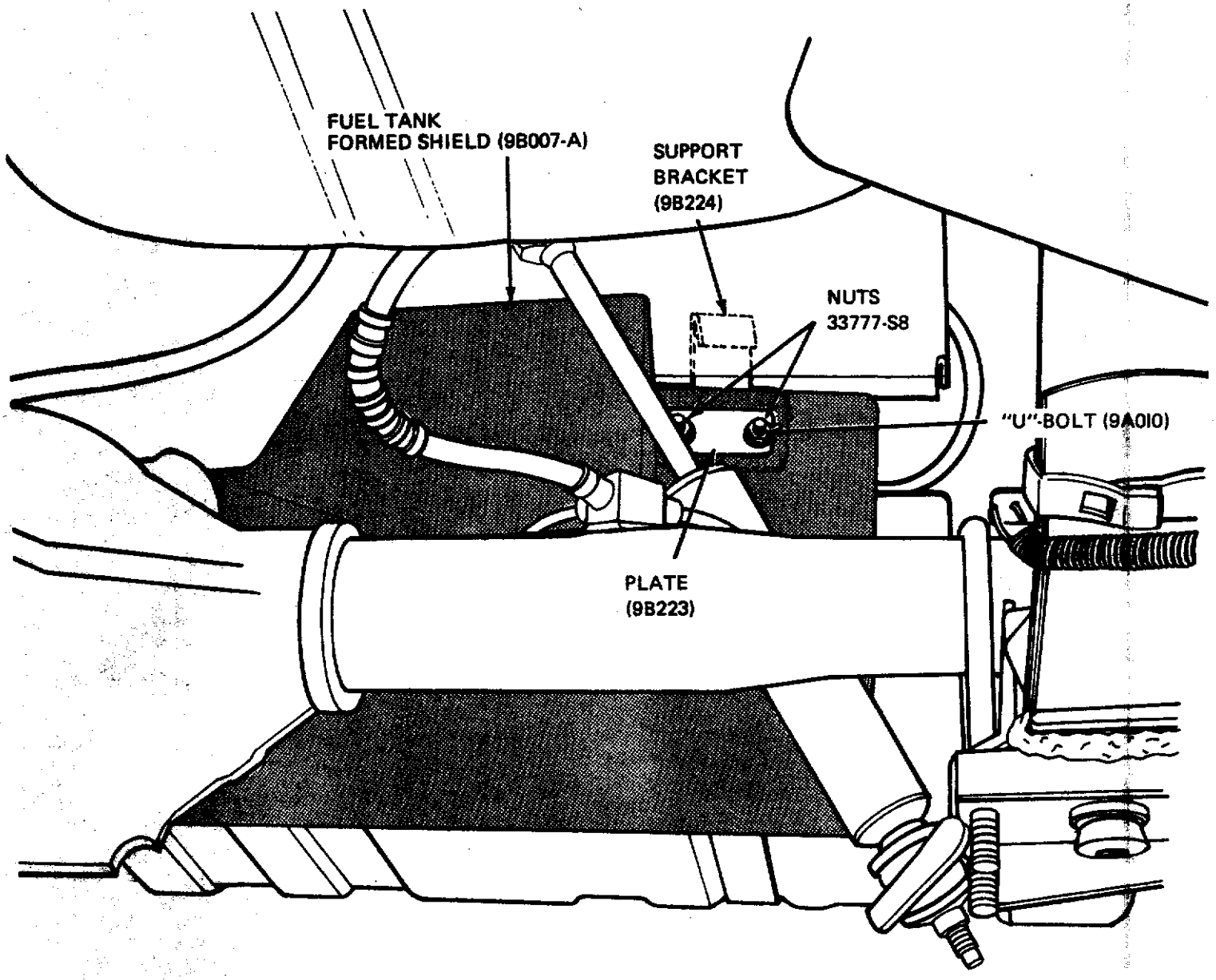

**VIEW LOOKING REARWARD UNDER
LEFT HAND SIDE OF VEHICLE**

SHIELD INSTALLATION

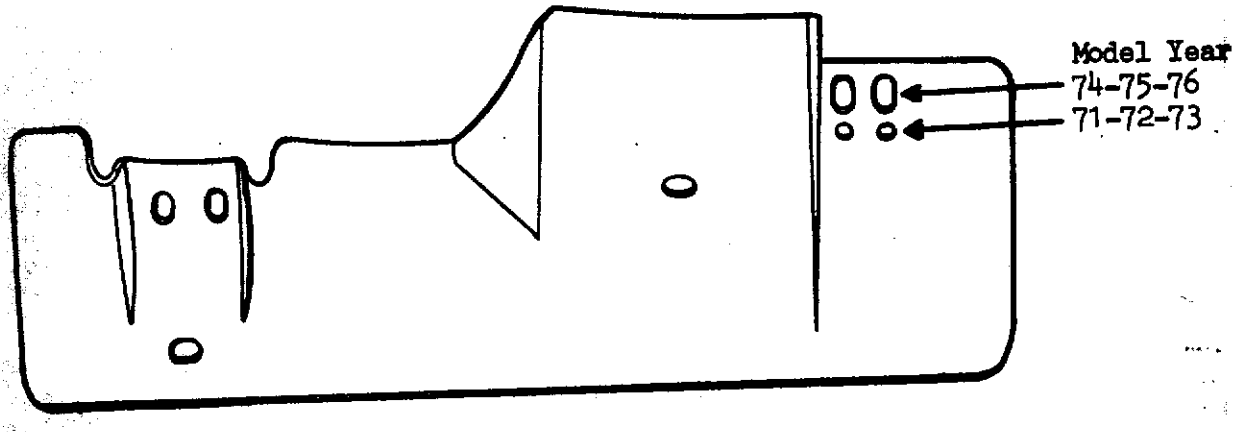

COMMON 1971-76 FUEL TANK SHIELD
9B007

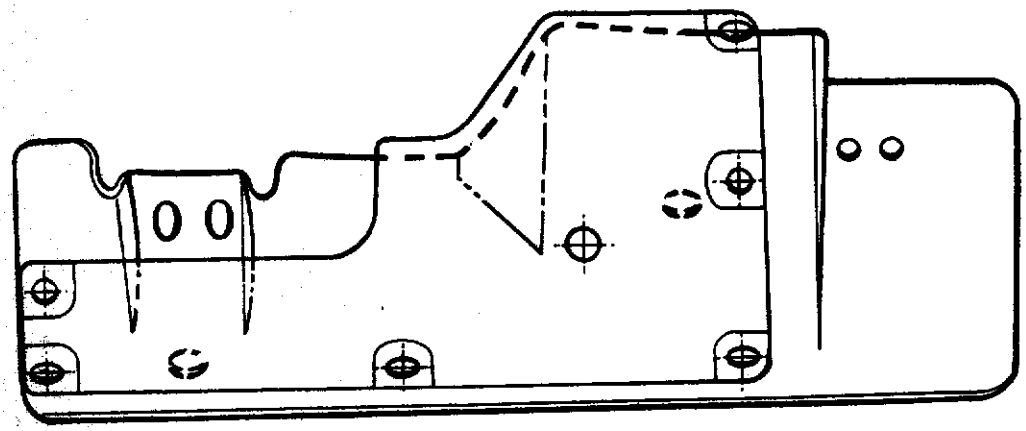

UNIQUE 1975 DUAL EXHAUST SHIELD
9B007

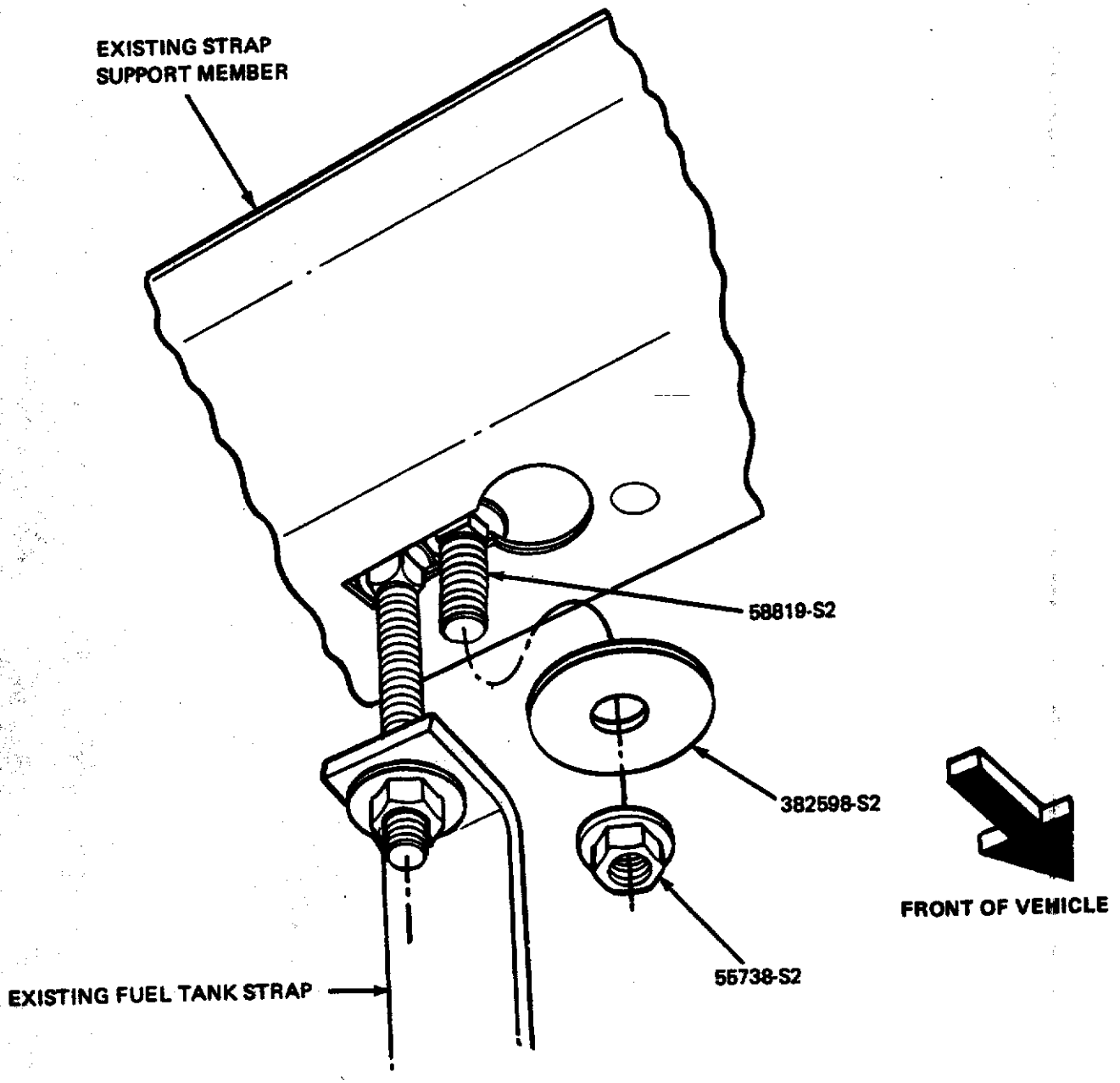

L.H. SHOWN 1971 - 73

VIEW LOOKING FORWARD ON
LEFT HAND SIDE OF VEHICLE

LEFT REAR QUARTER PANEL

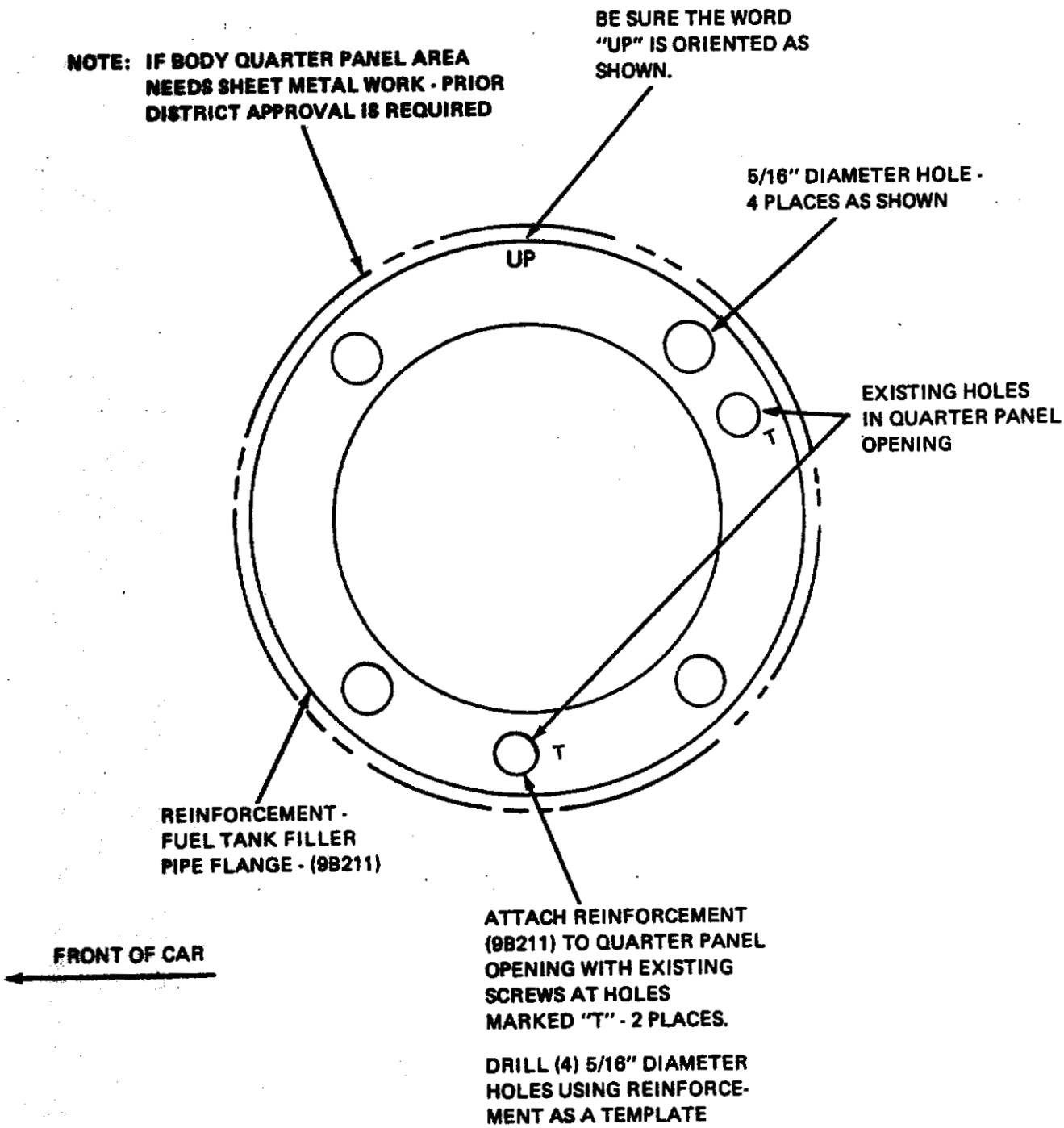

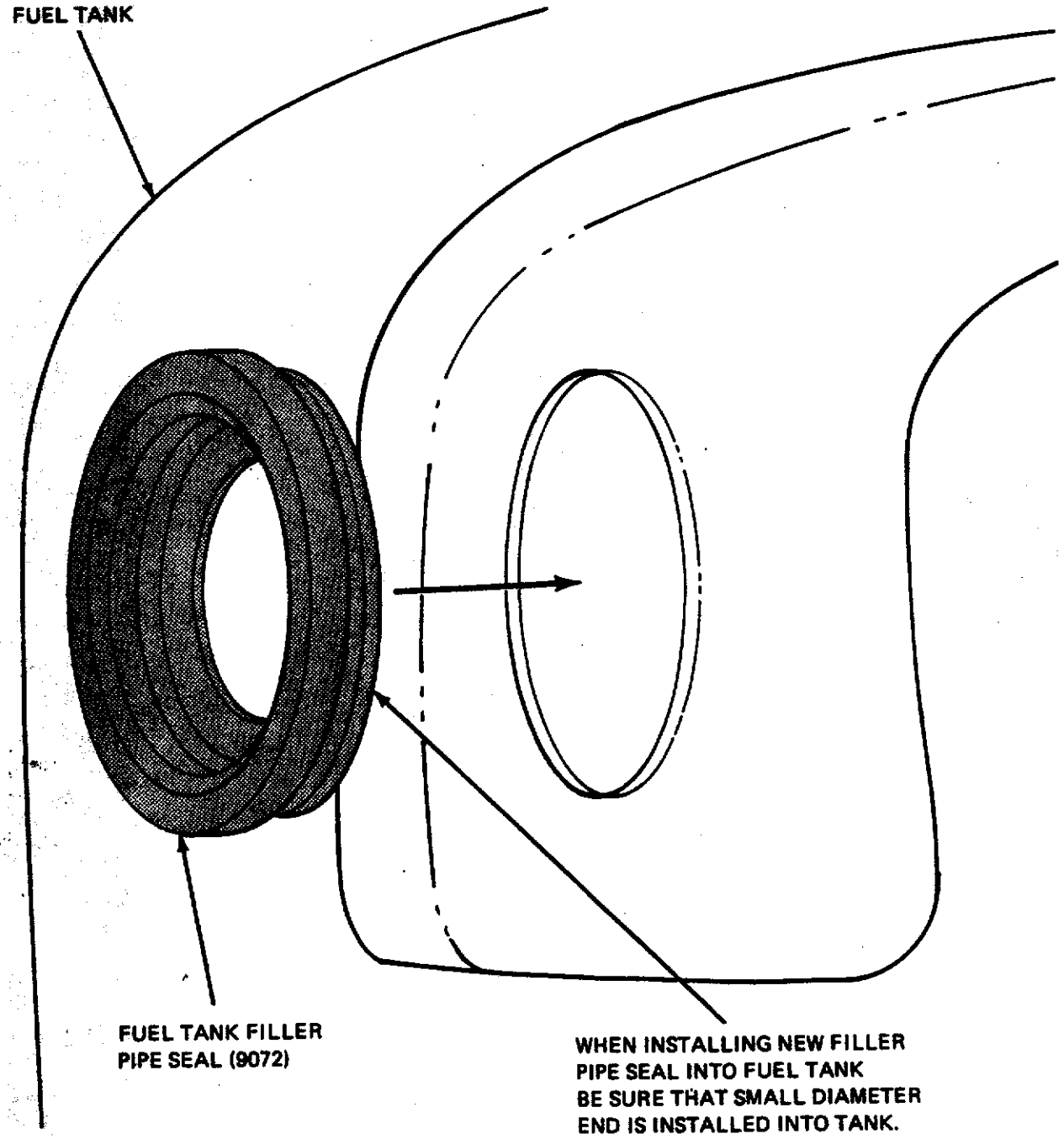
FUEL TANK
FUEL TANK FILLER
PIPE SEAL (9072)
WHEN INSTALLING NEW FILLER
PIPE SEAL INTO FUEL TANK
BE SURE THAT SMALL DIAMETER
END IS INSTALLED INTO TANK.

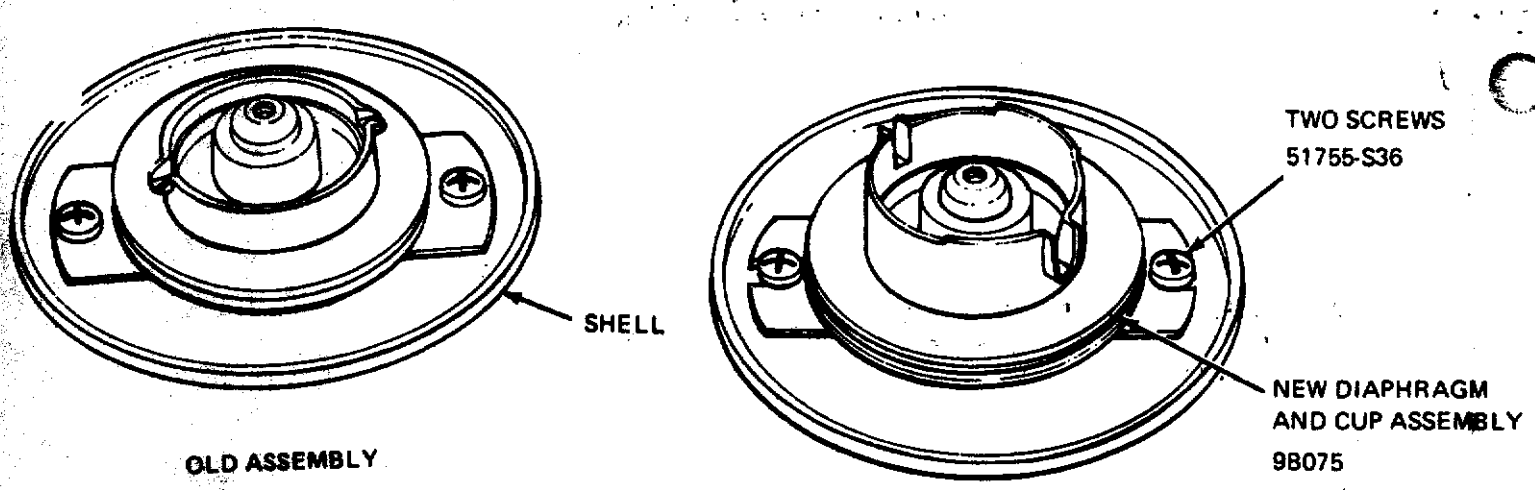

OLD ASSEMBLY

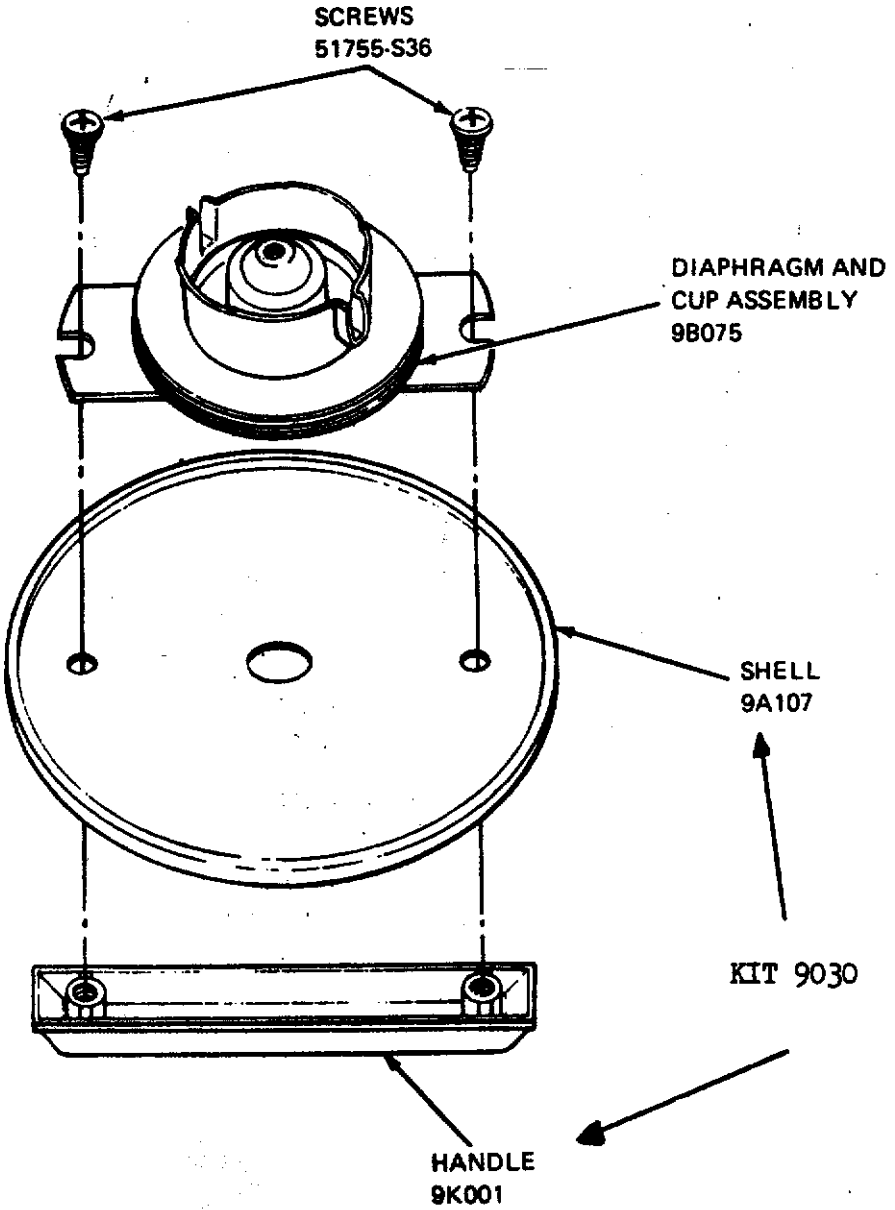

I.S. NO. 4762

ATTACHMENT X

1971/76 PINTO/BOBCAT FUEL SYSTEM MODIFICATION
RECALL NO. 293

Part Name	Previous or Existing Service Part Number	Recall Level * Or Replacing Service Part No.	Disposition
Cap (fuel tank filler)	D1FZ-9030-A (Prime-non-locking)	D1FZ-9030-C	Continue use of either part on Pinto S/W, Mustang and Ranchero
		D80Z-9030-A*	Current production part specified for Pinto/Bobcat Sedans and Runabouts
	D1PZ-9030-J (Chrome non-locking-Accy.)	D1PZ-9030-JA	Continue use of either part on Pinto S/W and Ranchero
		D1PZ-9030-M*	New chrome plated non-locking cap released for Pinto/Bobcat Sedans and Runabouts
	D5PZ-9030-A (Chrome non-locking-Accy.)	D5PZ-9030-AA	Continue use of either part on Pinto/Bobcat S/W, Mustang and Ranchero
		D1PZ-9030-M*	New chrome plated non-locking cap released for Pinto/Bobcat Sedans and Runabouts
	D1PZ-9030-G (Locking-Accy.)		Obsolete, D1PZ-9030-G replaced by D5FZ-9030-C on 3-18-74, form FPS 8181 issued on 5-5-78
	D5FZ-9030-C (Locking-Accy.)		Continue for service use only on Pinto/Bobcat S/W, Mustang, Ranchero and Granada
	D6FZ-9030-B (Locking-Accy.)		Continue for service use only on Pinto/Bobcat S/W, Mustang, Ranchero, Granada, Maverick and Comet
Pipe (fuel tank filler)	D1FZ-9034-A	D5FZ-9034-E *	Return prior level parts for credit (Form 340)
	D5FZ-9034-A	D5FZ-9034-F *	Return prior level parts for credit (Form 340)
	D5FZ-9034-D	D5FZ-9034-E *	Return prior level parts for credit (Form 340)
(fuel tank filler to tank)	C7AZ-9072-A	D7DZ-9072-A * D7DZ-9072-A	Obsolete, C7AZ-9072-A replaced by D7DZ-9072-A on 10-18-76, form FPS-8181 issued on 8-20-77.
Gasket (fuel tank filler pipe to quarter panel)	D1FZ-9076-B	D1FZ-9076-BA	Continue use of either part on Pinto/Bobcat S/W
		D7FZ-9076-A *	Current production part specified for Pinto/Bobcat Sedans and Runabouts

Memo: 1973/79 Ford Car and Lincoln-Mercury catalogs included these changes in September, 1978 publications which were forwarded to dealers mid-August.

1965/72 Ford Car catalog is a Final Issue; therefore, a Special Supplement will be issued in Early September to reflect part number and illustration changes.

ATTACHMENT T

EXPERT WITNESS REPORT - 2 January 2012 REVISION

Kline v. Loman Auto Group, Victoria Morgan-Alcala, et al.

Page Range 6

Pages 730 - 735

Defendant Lomans: Knowledge of Fuel System Defect Safety Recalls

On pages 20/21 of my Expert Witness Report - First Revision of 28 April 2011, I state

"O&C-3 In my expert experience I have personally/professionally examined the consumer response to safety recalls. This response rate, or yield, is dependant on the safety issue involved and, although the precise statistics are claimed to be a "trade secret" by the automotive industry, it is well-known that the highest safety defect recall yield <u>by far</u> correlates to customer notices that involve the elimination/reduction of a vehicle fire risk:

> *a. I am confident that if the SUSAN MORRIS KLINE family had been made aware of the salient facts contained in the main portion of this report and was offered, in a formal Chrysler recall, a retrofit that afforded the protection of a "Fuel Tank Skid Plate Shield," they would have responded responsibly by having their 1996 Jeep Grand Cherokee retrofitted by a competent Jeep dealer (See ¶ 21-c-i):*
>
> > *i. The issuance-of and service response-to safety defect retrofit recalls is well-known to defendant Loman Auto Group. Approximately five years prior to the accident of February 24, 2007 that took the life of SUSAN MORRIS KLINE, defendant Loman Auto Group was notified of, and potentially performed fire-related retrofits of a competitive brand (e.g. Service Part Numbers 3W7Z-9B007-AA, 3W7Z-9B007-BA and 3W7Z-9B007-CA)."*

The fuel tank on the "Panther" versions of the Ford Crown Victoria, Mercury Grand Marquis and Lincoln Town Car locate the fuel tank slightly aft and above the rear axle. These vehicles, in the police/emergency configuration, were part of a NHTSA defect investigation on the basis of rear end accident collisions that resulted in fuel tank failure, fire/explosions, and the severe burn injury or death of occupants. Unlike the ZJ-Body Jeep Grand Cherokee, these Panther fuel tanks are not exposed below the rear bumper, and are not subject to direct impact. However, in view of real-world facts, Ford voluntarily recalled the Panther vehicles for retrofit.

Ford through its dealerships, although officially making the retrofit available to police and emergency vehicles, will also provide for sale to the general public Service Part Numbers 3W7Z-9B007-AA, 3W7Z-9B007-BA and 3W7Z-9B007-CA. Ford dealership mechanics, such as those at Lomans Auto Group, can perform this retrofit in less than 30 minutes.

According to Ford this retrofit will provide fuel tank safety integrity up 65mph. This minimum level of protection should have been made available to the owners of the ZJ-Body Jeep Grand Cherokee, and retrofit to such levels was/is possible. In its current unprotected configuration, vehicles such as the 1996 Jeep Grand Cherokee, which were operated by Mrs. Susan Kline and serviced by Lomans, do not provide protection for very low speed impacts.

Regarding O&C-3-a-i, I have personally performed this retrofit on my 1997 Ford Crown Victoria vehicle, on my back in my driveway. This retrofit required simple hand tools, a floor jack and safety stands (Please see sub-attached photographs).

CRAFTSMAN
CRAFTSMAN
CRAFTSMAN
CROWN VICTORIA
MICHIGAN
8GD F70
CORNELL

CROWN VICTORIA POLICE INTERCEPTOR (CVPI) PACKAGE OPTIONAL UPGRADE KIT

AFFECTED VEHICLES: CERTAIN 1992 THROUGH 2003 MODEL YEAR CROWN VICTORIA POLICE INTERCEPTOR (CVPI) VEHICLES CURRENTLY IN POLICE DUTY

2003 MODEL YEAR VEHICLES
SERVICE PART NUMBER 3W7Z-9B007-AA
KIT CONTENTS:

Part Number	Description	Quantity
-9N070-	Shield, Fuel Tank Strap – RH	1
-9C170-	Shield, Fuel Tank Strap – LH	1
-9F935-	Pads, Canister Buffer	2
W704369-S309	Rivet, Carbon Canister	5
-4C036-	Shield, Differential	1
-4346-	Bolt, Differential Shield Hex Head	3
-4A389-	Shield Assembly, Axle – RH	1
-4C035-	Shield Assembly, Axle – LH	1
-19G376-	Instruction Sheet	1

1998-2002 MODEL YEAR VEHICLES
SERVICE PART NUMBER 3W7Z-9B007-BA
KIT CONTENTS:

Part Number	Description	Quantity
-9N070-	Shield, Fuel Tank Strap – RH	1
-9C170-	Shield, Fuel Tank Strap – LH	1
-9F935-	Pads, Canister Buffer	2
W704369-S309	Rivet, Carbon Canister	5
-4C036-	Shield, Differential	1
-4346-	Bolt, Differential Shield Hex Head	3
-4A389-	Shield Assembly, Axle – RH	1
-4C035-	Shield Assembly, Axle – LH	1
W709586S-300	Strap, Tie	2
-19G376-	Instruction Sheet	1

1992-1997 MODEL YEAR VEHICLES
SERVICE PART NUMBER 3W7Z-9B007-CA
KIT CONTENTS:

Part Number	Description	Quantity

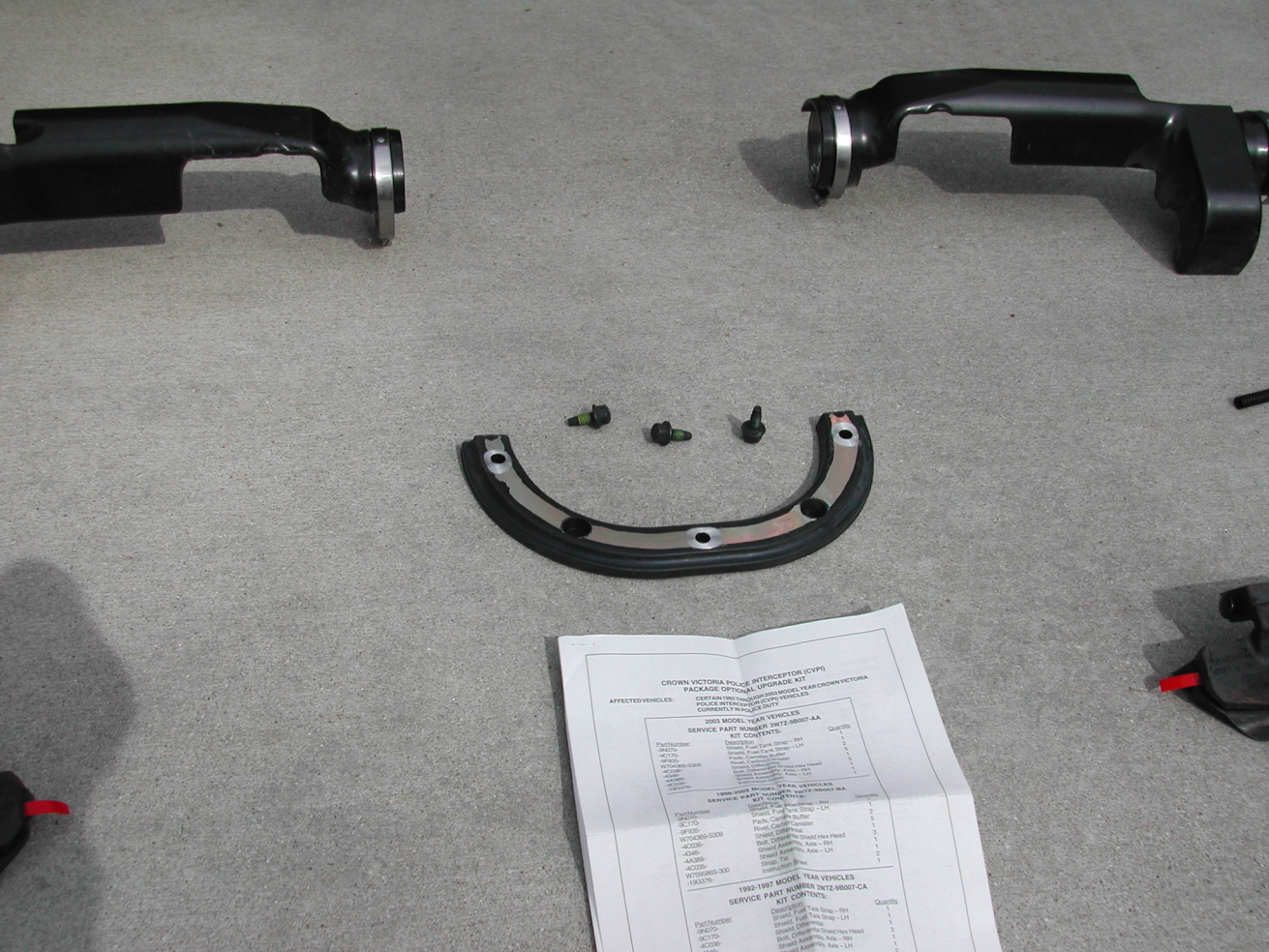
CROWN VICTORIA POLICE INTERCEPTOR (CVPI)
PACKAGE OPTIONAL UPGRADE KIT
AFFECTED VEHICLES:
CERTAIN 1992 THROUGH 2003 MODEL YEAR CROWN VICTORIA POLICE INTERCEPTOR (CVPI) VEHICLES CURRENTLY IN POLICE DUTY
2003 MODEL YEAR VEHICLES
SERVICE PART NUMBER 3W7Z-9B007-AA
KIT CONTENTS:
Part Number
Description
Quantity
-9N070-
Shield, Fuel Tank Strap – RH
1
-9C170-
Shield, Fuel Tank Strap – LH
2
-9F935-
Pads, Canister Buffer
5
W704369-S309
Rivet, Canister Canister
1
-4C036-
Shield, Differential Shield Hex Head
3
-4349-
Bolt, Differential Shield Hex Head
1
-4C035-
Shield Assembly, Axle – RH
1
-4C036-
Shield Assembly, Axle – LH
1
-19G376-
Strap, Tie
1
1998-2002 MODEL YEAR VEHICLES
SERVICE PART NUMBER 3W7Z-9B007-BA
KIT CONTENTS:
Part Number
Description
Quantity
-9N070-
Shield, Fuel Tank Strap – RH
1
-9C170-
Shield, Fuel Tank Strap – LH
2
-9F935-
Pads, Canister Buffer
5
W704369-S309
Rivet, Canister Canister
1
-4C036-
Shield, Differential Shield Hex Head
3
-4349-
Bolt, Differential Shield Hex Head
1
-4C035-
Shield Assembly, Axle – RH
1
-4C036-
Shield Assembly, Axle – LH
2
-19G376-
Strap, Tie
1
Instruction Sheet
1992-1997 MODEL YEAR VEHICLES
SERVICE PART NUMBER 3W7Z-9B007-CA
KIT CONTENTS:
Part Number
Description
Quantity
-9N070-
Shield, Fuel Tank Strap – RH
1
-9C170-
Shield, Fuel Tank Strap – LH
1
-4C036-
Shield, Differential Shield Hex Head
3
-4C036-
Bolt, Differential Shield Hex Head
1
-4C036-
Shield Assembly, Axle – RH
1
-19G376-
Shield Assembly, Axle – LH
1

• **BODY—PARTS AND PROCEDURE TO REDUCE THE POTENTIAL OF FUEL TANK PUNCTURES DURING RARE AND EXTREMELY HIGH-SPEED REAR IMPACTS** • **FUEL— PARTS AND PROCEDURE TO REDUCE THE POTENTIAL OF FUEL TANK PUNCTURES DURING RARE AND EXTREMELY HIGH-SPEED REAR IMPACTS**	**Article No. 01-21-14**

FORD: 1992-2001 CROWN VICTORIA

LINCOLN: 1992-2001 TOWN CAR

MERCURY: 1992-2001 GRAND MARQUIS

ISSUE

This article is being issued to provide Service Parts and a Service Procedure to further reduce the unlikely possibility of a fuel tank puncture during an extremely high-speed rear impact in certain vehicle applications. Some Police agencies have indicated that their vehicles may stop along high-speed roads - which is prohibited by law except in emergency situations - and may thereby become exposed to extremely high-speed rear impacts, typically by drunk drivers.

Ford corporate guideline tests, at speeds 20 mph above government requirements, demonstrate excellent fuel tank integrity in these vehicles. Because of the nature of their use, some Police vehicles in certain applications may be exposed to extremely high-speed rear impacts with closing speeds above 80 mph. Investigation of several police vehicles involved in extreme high-speed rear impacts has identified a potential cause of the fuel tank puncture in at least one of these impacts.

ACTION

Recommended for vehicles exposed to extremely high-speed rear impacts. Refer to the following Service Procedure for details.

SERVICE PROCEDURE

1. On 1992-1997 vehicles, replace Park Brake Cable to Axle attaching hex head bolt part N806900-S2 with round-headed fastener part W706024-S427. Model year 1998 and later vehicles are of a different design and do not use this bolt (Figure 1).
2. On 1992-2001 vehicles, use a die grinder or electric grinder with suitable carbide or grinding wheel to remove the 4 mm high by 6 mm wide tab which protrudes down from one flange of the rear stabilizer bar axle attachment "U" bracket. There is a "U" bracket at each end of the center section of the rear stabilizer bar (Figure 2).

The "U" brackets do not need to be removed from the vehicle.

The tab should be ground until it is flush with the contour of the flange.

PART NUMBER	PART NAME
W706024-S427	Bolt - Round Headed Fastener

OTHER APPLICABLE ARTICLES: NONE

WARRANTY STATUS: Eligible Under The Provisions Of Bumper To Bumper Warranty Coverage

OPERATION	DESCRIPTION	TIME
012114A	Replace Park Brake Cable To Axle Attaching Hex Head Fastener With Round Headed Fastener, Then Grind Tab From Both U-Brackets On Rear Stabilizer Bar 1992-1997	0.4 Hr.
012114B	Grind Tab From Both U-Brackets On Rear Stabilizer Bar 1992-2001	0.2 Hr.

CRUZ 1271

F030541

Copyright © 2001 Ford Motor Company

4000 22067

Article No. 01-21-14 Cont'd.

DEALER CODING

BASIC PART NO.	CONDITION CODE
4A047	42

OASIS CODES: 111000, 404000, 509000

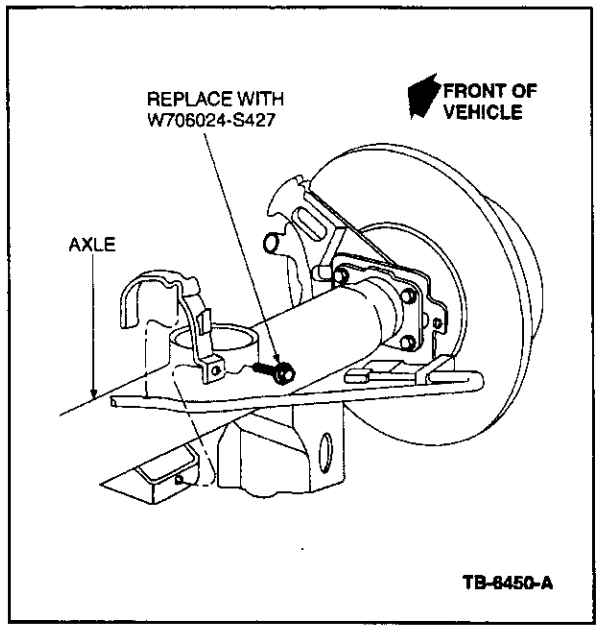

Figure 1 - Article 01-21-14

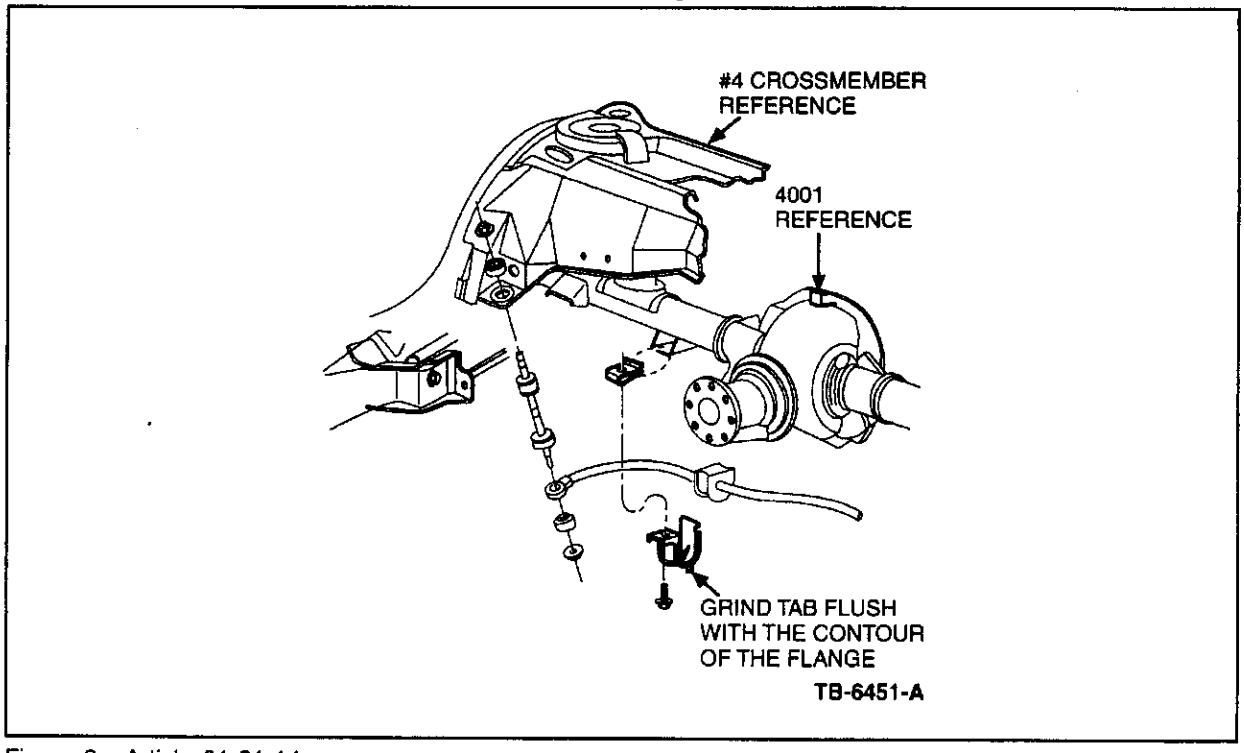

Figure 2 - Article 01-21-14

ATTACHMENT U

EXPERT WITNESS REPORT - 2 January 2012 REVISION

Kline v. Loman Auto Group, Victoria Morgan-Alcala, et al.

Page Range 6

Pages 737 - 745

The Toyota Speedometer Issue and Ruse

Background

In 1982/3 I co-authored with Chief Engineer Daniel Eisenburg, the documentation for the Ford Motor Company Electronic Engine Controller Version Four, coded named EEC-IV. The request that I assist Mr. Eisenburg came from Director of Powertrain Operations Mr. James Donaldson. Mr. Donaldson requested that I assist with the documentation task on the EEC-IV on the basis of my knowledge of Powertrain issues, electronic and electronic Powertrain systems controllers, as well as my prior authorship of detailed technical papers for the both the Product Planning and Powertrain Operations groups. My EEC-IV documentation manual was in my Chrysler office in Auburn Hills, Michigan when Chrysler legal and security staffs raided my office and confiscated all of its contents during the Christmas holiday recess of 1994.

In 1985 I was not involved directly in the technical re-designing of the Chrysler Dual Board Electronic Controller (DBEC) into the Single Board Electronic Controller (SBEC), but assisted with the planning and budgeting of its development and implementation..

I am a current member of the Institute of Electrical and Electronics Engineers (IEEE) and have remained fundamentally familiar with electrical, electronic, computational and plasma physics related topics.

On page 4 of his 14 March 2011 report, defendant's expert Dr. Nicholas J. Durisek deploys the following statement:

" . . . the Toyota was likely being driven at 68 to 77 miles per hour prior to being driven into the rear of the Jeep."

Ten days later, on page 5 of his report of 24 March 2011, defendant's expert Mr. Robert D. Banta deploys very similar testimony:

" . . . the speed at impact was determined to be 68 to 77 miles per hour into this nearly stopped vehicle."

It is quite clear, from the actual physical condition of the subject vehicle, the critical evidence gathered by plaintiff's experts, prior to defense expert spoliation (Attachment U); a 1996 ZJ-Body Jeep Grand Cherokee bearing vehicle identification number 1J4GZ58S9TC401311, that no such speed was "determined."

It is clear that defendant's experts have based the two testimonies above on "other information." Specifically, these defense experts are coyly using the post-accident speedometer reading that was alleged to have been observed, at the accident scene, on the 2004 Toyota Sienna minivan, that was driven by co-defendant, Ms. Victoria Morgan. I have noted that they do not overtly and forthrightly state such use. For this reason, and reasons that come from long-experience with products litigation, I do not intend to allow the plaintiff, the Honorable Court or its members to be victims of an in-court ruse regarding that alleged speedometer reading. Necessarily I was therefore motivated to conducted extensive research into the Toyota electronic controls technology and related hardware, such as the speedometer system.

I personally interviewed three Toyota mechanics, both by telephone and in-person at the Toyota dealership regarding the Toyota electronic speedometer and its control system. In all three interviews I asked if a speedometer that was "stuck at 70 mph" was a reliable source of information, at any time, regarding vehicle speed. All three Toyota mechanics, totaling over 40 person-years of experience, emphatically stated that such a "reading" could not be relied upon. When I clarified that the 'at any

time' portion of my question referred to a post accident scenario, their emphasis on "not reliable" remained emphatic or increased. I then asked all three in-turn what was a reliable source of vehicle speed, all three responded, without hesitation, that the vehicle CAN, or Controller Area Network; the so-called "Black Box." But unlike aerospace systems, automotive black boxes continue to be, in my opinion, deficient.

The CAN is an on-board data memory source that is routinely used by Toyota mechanics to diagnose everything from vehicle problems to vehicle abuse. The CAN is the only vehicle source that can reliably provide recent vehicle speeds. However, all three mechanics also explained that the CAN memory technology was volatile. Specifically, in the case of a Toyota vehicle, the only device that maintains memory retention in the CAN is a fully charged and connected battery. In an accident scenario, wherein not only is the alternator recharging system destroyed/inoperative but the battery is also destroyed, no CAN data survives. In the aerospace data retention and recovery systems, the extra cost to provide non-volatile memory is required.[1]

The NHTSA / NASA Investigation of Toyota Sudden Acceleration

The most recent and well-known NHTSA safety defect investigations involved allegations of defective Toyota electronic control systems that caused sudden and uncontrollable acceleration. What is less well-know is the fact that NHTSA utilized the expertise of the National Aeronautical and Space Administration (NASA) to conduct detailed analysis of those Toyota electronic control systems.

A central theme that evolved in the NASA investigation included the CAN. Perhaps the more troublesome aspect of the NASA findings involved allegations that certain accident investigators were guilty of momentarily disconnecting the incident or accident scene Toyota vehicles for the explicit purpose of erasing the CAN data. In other words, it is well-known that the CAN is the only reliable source of on-board data (not a "stuck" speedometer) and that being aware of the simple technical fact that CAN memory is volatile motivated spoliation.

The salient NASA reports are available here:

http://www.nhtsa.gov/staticfiles/nvs/pdf/NASA_report_execsum.pdf

http://www.nhtsa.gov/staticfiles/nvs/pdf/NASA_FR_Appendix_A_Software.pdf

[1] In June 1985, over twenty-one years ago, under Tab 8 of 10 suggestions, I specifically requested that Chrysler investigate a non-volatile "Electronic Warranty Watch Dog" system. My write-up and the official Chrysler response is sub-attached. I possess long-standing familiarity with these issues.

Conclusion

I am deeply concerned, given the report wordings of defendant's experts Durisek and Banta, that a ruse may be deployed at-trial regarding the "stuck" Toyota speedometer alleged to have been observed at the accident scene of February 24, 2007, wherein Mrs. Susan Kline was killed. I am compelled to alert the Honorable Court and its members that such a ruse is probable.

Specifically, in neither of their expert reports do Durisek or Banta even mention the Toyota CAN data storage and recovery system. Also, neither mentions any intention or attempt to retrieve this otherwise reliable source of vehicle speed data. From my investigations as reported here, any attempt to do so would be fruitless because both the battery and the charging system of the 2004 Toyota Sienna minivan, that was driven by co-defendant, Ms. Victoria Morgan, was completely destroyed, which in-turn deleted all power-dependent volatile memory that existed, prior to the collision, in the CAN.

In the alternative, if there was "other information" that alleged that the offending 2004 Toyota Sienna minivan had a speedometer that was "stuck" at a very low reading, say 28 mph; given what I now know, as an honest expert, I would not and could not use that reading in an effort to assist the plaintiff's case, nor would I reserve such "other information" as part of a courtroom ruse.

E. J. LAGINESS

7/05/85

To: R. W. Johnson

Subject: **PAUL SHERIDAN ADVANCE TECHNOLOGY LIST & INFORMATION BOOK**

Dick,

We have reviewed the items in the subject information book for potential application to Z-Body.

Items 3, 4 and 6 have potential for application and will be reviewed during the system review phase of the program. Our response on each item is contained in Attachment I.

In conversation with Paul Sheridan, he indicated that Business Group contacts are not being made on any formal basis to review this information.

E. J. Laginess

/sah
Attachments

cc: O. L. Ham
J. M. Hossack
G. Marchenia
P. V. Sheridan

EXHIBIT 3

Electronic Throttle Control

Electronic throttle control requires use of a pedal position sensor, motor driven throttle actuator, additional wiring, and additional controls which can be integrated into the engine controller.

- Cost Reduction with speed control, Base Car - TBD
- Weight reduction
- Part complexity reduction
- Reduced NVH
- Assembly simplification
- Packaging advantage with no hole in dash for cable
- Potential for improved "performance" feel

It provides the capability of including speed control without adding extra engine components (servomotor, vacuum reservoir and hoses, and actuator cable). The primary disadvantages are unproven technology and unknown cost. It is recommended that electronic throttle control be further investigated for application to Liberty I. It could have greater potential on upscale cars.

R. H. Smith/J. Budzyn

EXHIBIT 8

Electronic Warranty "Watch Dog"

It is questionable whether an "electronic watch dog" for detecting engine/drive train abuse should be pursued for Liberty I. In addition to the increased cost, the concept, as presented, appears to be subjective and could penalyze rather than protect the customer.

J. Budzyn

J. M. HOSSACK

June 6, 1985

TO: R. W. Johnson

Subject: Liberty Suggestions

Paul Sheridan of Advance Powertrain Components Planning has compiled the attached advanced technology items. The discussions included with the ten items may prove useful to your evaluation/consideration for inclusion in the Liberty or other advance product programs. If you have any questions, please contact Paul directly on 6-0341.

J. M. Hossack

attach.
cc: H. E. Cook
E. J. Laginess, Jr.
E. A. Reickert

ELECTRONIC THROTTLE CONTROL
PLANNING SUMMARY

PURPOSE

The purpose of this summary is to introduce the Powertrain Components Business Group to the electronic thrott control concept and briefly outline advantages/disadvantages, advanced concepts, and supplier/competitive act

BACKGROUND

Conventional throttle control technology requires use of cables, bracketry, rods, return springs, clips, wash nuts, separate AIS system, separate speed control system and complicated mechanical couplings including trans kick-down, etc.

Advantages	Disadvantages
- Cost effective	- High weight
- Proven technology	- Limited pedal effort/feel design capability
- Established supplier base	- Potential sticking of throttle
	- NVH (vibration in pedal, etc.)
	- Part complexity
	- Assembly complexity (adjustments, etc.)

Electronic throttle control technology (ETC) requires use of pedal position sensor, throttle actuator (motor wiring, some dedicated switching and electronic controls (engine controller integrated).

Advantages	Disadvantages
- Optimum pedal effort/feel design capability	- Cost TBD
- Greatly reduced parts complexity	- Unproven technology
- Assembly simplification (i.e., electronic adjustment)	- Supplier base not known/fully developed
- Enhanced safety	
- Increased systems interface capability (speed control and AIS now part of ETC)	

ADVANCED CAPABILITIES

In addition to the advantages listed above, ETC offers advanced capabilities in the following areas:

- Traction control (anti-spin)
- Start-up procedure standardization
- Improved engine/transmission interactives capability (i.e., shift quality and programming)
- Optimized acceleration vs. fuel economy capability
- Power limiting function for powertrain protection (i.e., overheat, low oil, etc.)

CORPORATE TIMING

Proposed timing for evaluation/introduction of the ETC system is as follows:

- Concept Vehicle	June 20, 1985
- Development Vehicle	August 15, 1985
- Prototype Vehicle	September 1, 1986
- Introduction	Job 1, 1990

SUPPLIER BASE

The following suppliers have ETC system development in progress:

- AC-Delco	- Hitachi
- Bosch*	- Holley
- Carter	- Mikuni
- Eaton	- VDO

* Full system available by June 1985

COMPETITIVE VEHICLE SYSTEMS

Competitive introduction is TBD.

- Isuzu*	- BMW
- Mercedes-Benz	- G.M.
- Porsche	- Audi

* Presently has operating system

KEY CONTACTS

. Advance Powertrain Components Planning - F. B. Whelan X6819, Paul V. Sheridan X0341.
. Engineering - J. P. Romine - X1879, N. W. Secord X3379, D. R. Morrison X3839, T. Potochick X3839.
. Purchasing - TBD.
. Finance - TBD.

May 1, 1985 (PVS PS.1)

ELECTRONIC WARRANTY "WATCH DOG"

Of the many attributes that the New Chrysler Corporation can be justifiably proud, one is certainly the 5/50 warranty program. Obviously there are risks, costs and possibly some marketing oriented weaknesses (e.g., high deductibles) associated with this program. However, there may be a way by which Chrysler Corporation could enhance its business position in relation to customer abuses of, or neglect of the requirements of the 5/50 warranty program.

With the enormous strides being made in electronics, specifically electronic engine controls and instrument panel displays, an electronic warranty "watch-dog" could be integrated into the electronic controller. The system would involve a software package to "turn-on" when specific criteria are ambient at the relevant sensors. It would also involve memory capacity dedicated to the retention of this information for later coded retrieval during service/warranty claim dealer diagnosis. The possible conditions worthy of monitoring include but are not necessarily limited to:

- Turbo-charge overboost - If the vehicle's electronic waste-gate controls have been tampered with, causing engine damaging overboost to occur, this could be recorded/encrypted utilizing the necessary sensors.

- Turbo-charge duration - This is similar to #1 but emphasizes the use of an ECU-internal clock to quantify the tampered duration of the previously factory-calibrated overboost schedule.

- Engine Coolant Temperature - System would check if engine has been run for extended periods in an overheated condition.

- Powertrain Fluid Levels - Engine oil and coolant and transmission fluid levels etc., could be monitored and the time/mileage duration of the "low level" condition could be memorized.

- Vehicle MPH - Monitoring of prolonged periods (time/mileage) of excessive vehicle speeds could be memorized for retrieval and abuse level determination.

These are just a few examples of conditions that could be defined as voiding/adjusting certain coverages of the 5/50 warranty.

This type of vehicle/driver abuse monitoring system would serve to protect both the customer as well as Chrysler. The customer who does not abuse the vehicle would enjoy the future potentiality of certain lowered/eliminated deductibles as Chrysler gains confidence/experience with these systems. Chrysler would be protected from abusive vehicle operators and gain the obvious marketing attributes of this product feature.

513.2PVS

ATTACHMENT V

EXPERT WITNESS REPORT - 2 January 2012 REVISION

Kline v. Loman Auto Group, Victoria Morgan-Alcala, et al.

Page Range 2

Pages 747 - 748

Subject Vehicle Spoliation by Defendant's Experts

The subject vehicle, the critical evidence in this litigation, is the 1996 ZJ-Body Jeep Grand Cherokee bearing vehicle identification number 1J4GZ58S9TC401311 which was driven by Mrs. Susan Kline (deceased) on the morning of February 24, 2007, and which was involved in a rear-end underride collision, which resulted in a fuel tank/system failure and ensuing fire. The vehicle had/has been securely stored at plaintiff's expense.

I am personally aware that during 2008 and 2009 plaintiff's counsel Angel M. DeFilippo made repeated offers to all defendants to access the subject vehicle for the purpose of evidentiary inspection within the automotive product liability litigation of Kline v. Loman Auto Group, Victoria Morgan-Alcala, et al. The central theme of these offers included extensive effort to schedule and agree to joint and simultaneous inspection of the subject vehicle for the explicit purpose of avoiding the issue of, or any claims of spoliation by either/any parties. Plaintiff's explicit purpose throughout these efforts was to preserve the integrity of critical evidence. The defendant's have blatantly failed in their reverse obligation.

I have been directly involved in automotive product liability litigation for sixteen years, specifically relating to cases involving an original defendant in the instant case, Chrysler Corporation. In several cases Chrysler argued and prevailed in their effort to attain summary judgment or severe limitations of plaintiff's alleged evidence, by inference to spoliation. In at least one case (Gardner v Chrysler), I was in complete agreement with Chrysler's spoliation defense.

The Merriam-Webster Dictionary defines the term spoliation as "the act of injuring especially beyond reclaim." The website Lawyers.com defines this term as "the destruction, alteration, or mutilation of evidence especially by a party for whom the evidence is damaging."

On Thursday April 2, 2009 I traveled to New Jersey and then to the storage site of the subject vehicle for the purpose of evidentiary inspection. Plaintiff's experts Mr. Don Phillips traveled from Pennsylvania, and Mr. Neil Hannemann traveled from California. Initially I had assumed that defendant's experts would be jointly involved in the evidentiary inspection of the subject vehicle. This was not the case, despite innumerable good faith efforts by plaintiff's counsel.

Upon arrival at the storage location, and upon information that the joint inspection would not be taking place, or at the very least include attendance by any representative of any defendant; that the inspection would only involve only plaintiff's experts, I immediately and emphatically denied the requests by Phillips and Hannemann that the subject vehicle be lifted or moved. The basis of my denial was the well-established history of claims of spoliation by Chrysler. My position on this matter was affirmed by plaintiff's counsel. Further, to rebut any challenges to the contrary, I took numerous photographs of the subject vehicle in its undisturbed state. In this scenario, and in this context, plaintiff's experts pursued a detailed but visual-only inspection. Under the circumstances the plaintiff's experts denied themselves a full detailed physical inspection awaiting response from defendants to plaintiff joint scheduling efforts. Plaintiff experts exercised extreme caution to avoid destruction or altering of evidence of any kind. Defendants were later made fully aware of this due care tendered by the plaintiff, as well as its context.

In stark contrast, the defendant's experts have acted consciously, willfully and in bad faith. Despite knowledge of a long history of spoliation inference by defendant's counsel, despite repeated good faith attempts by plaintiff's counsel to schedule a joint inspection, defense experts prevailed on Tuesday June 29, 2010 and preceded to allow defendant's experts to lift the subject vehicle (with a fork lift) and allow pursuit of unilateral physical inspection. During the lifting procedure, as plaintiff's experts had anticipated, the subject vehicle underwent extensive dimensional changes, components literally "fell off" the vehicle, and crucial rear suspension component positions were permanently altered from the February 24, 2007 accident scene status. This destruction of evidence was blatant; it was witnessed by all in-attendance, including plaintiff's counsel, the fork lift operator, the storage yard staff and, of course, the defendants experts themselves.

Perhaps more insidious is the fact that defendant's experts, Mr. Robert D. Banta and Dr. Nicholas J. Durisek have submitted reports to this litigation which neglects to mention any of the above or the clear evidence of (physical) spoliation. In its current tampered condition, plaintiff's experts are denied any reasonable possibility of confirming or refuting the alleged conclusions based on the alleged evidence obtained by defendant experts Banta and Durisek. Indeed, at this point, pursuant to our expertise, we have no intention of attempting to do so.

Vehicle evidence is known to be material in the Kline litigation. Specifically, substantial disagreement exists regarding the impact speed of the accident. In this context and her knowledge of prior spoliation defenses, at the very least, defendant's counsel Ms. Sheila Jeffrey should have easily recognized the adverse inference this "inspection" would render to a reasonable person.

Conclusion

The textbook definition of spoliation is the intentional destruction of evidence. However, spoliation issues and claims also arise when evidence is lost, altered or cannot be re-produced. As I mentioned above, this is the exact tact that Chrysler has deployed in prior product litigations. Also, spoliation is not limited to conduct that is intentional; it also has been applied to conduct that is negligent. In this instance, I am of the studied opinion that the defendants are guilty of both. A spoliation inference may be applied to this litigation because at the time that the subject vehicle evidence was lost or destroyed, a reasonable person in the defendant's position was aware the subject vehicle was critical evidence. Now, due to the actions of the defendants, agreement as to the physical evidence is utterly impossible.

I am only cursorily familiar with New Jersey law, however it is my understanding that the power to sanction for spoliation comes from the inherent power of the court, not substantive law. On this basis, and the above, I hereby recommend to the plaintiff that an appropriate motion to address the issue of subject vehicle spoliation and the resulting tainting of the expert reports of Banta and Durisek be filed with the Honorable Court.

ATTACHMENT W

EXPERT WITNESS REPORT - 2 January 2012 REVISION

Kline v. Loman Auto Group, Victoria Morgan-Alcala, et al.

Page Range 69

Pages 750 - 818

GRIECO, OATES & DE FILIPPO, LLC
ATTORNEYS AT LAW
414 EAGLE ROCK AVENUE
SUITE 200
WEST ORANGE, NEW JERSEY 07052
Telephone No. (973) 243-2099
Attorneys for the Plaintiff(s)

THOMAS KLINE, AS ADMINISTRATOR AD PROSEQUENDUM OF THE HEIRS AT LAW OF SUSAN MORRIS KLINE, (DECEASED), AS ADMINISTRATOR OF THE ESTATE OF SUSAN MORRIS KLINE, and THOMAS KLINE, INDIVIDUALLY,	: SUPERIOR COURT OF NEW JERSEY : LAW DIVISION : : MORRIS COUNTY : DOCKET NO. MRS-L-3575-08 : :
Plaintiff(s),	: CIVIL ACTION : : AFFIDAVIT
v.	: :
VICTORIA MORGAN-ALCALA, CARLOS ALCALA, NATALIE RAWLS, DAIMLER CHRYSLER CORPORATION, A/K/A/ CHRYSLER CORPORATION, LOMAN AUTO GROUP, BUTLER CHRYSLER JEEP, INC., JOHN DOES, A THROUGH Z, (Names being Fictitious), ABC CORPORATIONS, 1 THROUGH 100, (Names Being Fictitious)	: : : : : : : : : :
Defendant(s).	:

I, PAUL V. SHERIDAN, residing at 22357 Columbia Street, Dearborn, Michigan 48124, of full age, hereby certify and say:

1. I am an expert in the within matter, Kline v. Chrysler, et al.

2. It is my understanding and direct experience in the instant matter that all documents and evidence, of any type or form, that plaintiffs intend to rely upon for deposition of defense witnesses have been and will be submitted to the defense counsel in accordance with the well-known, ordinary and customary rules of deposition discovery.

3. It is my understanding and direct experience in the instant matter that all documents and evidence, of any type or form, that plaintiffs intend to rely upon at trial have been and will be submitted to the defense counsel in accordance with the well-known, ordinary and customary rules of discovery, and prior to the discovery deadline as set by the Honorable Court..

4. As defense counsel is fully aware, and consistent with the statements of plaintiff counsel Angel M. DeFilippo, in reference to the June 14, 2011 deposition of former Executive Vice President of (Chrysler) Engineering and Jeep Product Executive Mr. Francois J. Castaing, all documents that plaintiff relied on at deposition were submitted into evidence in accordance with the well-known, ordinary and customary rules of deposition discovery.

5. As defense counsel is fully aware, and consistent with the statements of plaintiff counsel Angel M. DeFilippo, in reference to the June 15, 2011 deposition of former Chrysler executive Mr. Bernard I. Robertson, former Jeep and Truck Engineering General Manager, all documents that plaintiff relied on at deposition were submitted into evidence in accordance with the well-known, ordinary and customary rules of deposition discovery.

6. As defense counsel is fully aware, and consistent with the statements of plaintiff counsel Angel M. DeFilippo, in reference to the June 15, 2011 deposition of former Chrysler executive Mr. Owen J. Viergutz, former Jeep and Truck Engineering Chassis Executive Engineer, all documents that plaintiff relied on at deposition were submitted into evidence in accordance with the well-known, ordinary and customary rules of deposition discovery.

7. As defense counsel is fully aware, and consistent with the statements of plaintiff counsel Angel M. DeFilippo, in reference to the June 14, 2011 deposition of former Executive Vice President of (Chrysler) Engineering and Jeep Product Executive Mr. Francois J. Castaing, all documents have already been forwarded to plaintiffs for “inspection” by defense counsel. It should be emphasized that none of these documents are “Chrysler documents” in the legal context; all are public documents such as service manuals, etc.

8. In light of defense counsel’s false insinuation that plaintiff’s counsel and/or their experts are not completely forthcoming with respect to the proper production of documents and evidence, I am attaching my September 27, 2011 submission to NHTSA. Although the defendants are already aware of this submission, Attachment 1 serves the spirit of the Honorable Court’s order since it was created subsequent to the depositions discussed above.

9. The additional file documents that I "possessed" up through December 16, 1994, that I will rely upon at deposition and at trial (on the basis of memory) is described in the letter of July 14, 1995 from Mr. Courtney E. Morgan, Jr. to Mr. Thomas G. Keinbaum (Attachment 2). The 'additional file documents' include but are not limited to the entries shown on Page 2:

Seat Back Strength - General
Seat Back Strength - FMVSS 207 Specifications
Rear Crash Survivability – General
FMVSS 301
Side Crashworthiness Issues
FMVSS 214
Bumper Issues
Taillamp Studies - Zarowitz
Amber Taillamp – NS-Body

I had offered these files to plaintiff's counsel, which are directly and indirectly relevant to their case, for use at the June 14, 2011 deposition of Mr. Francois J. Castaing and the June 15, 2011 depositions of Mr. Bernard I. Robertson and Mr. Owen J. Viergutz as well as for use at trial, but was unable to do so. Chrysler, through its legal counsel, has routinely failed to produce these files during the instant litigation and during the last sixteen years of product liability litigation that have sought my expertise and testimony.

10. I cannot produce the files described in #9 above because, while it was known that I would be on Christmas holiday, Chrysler internal legal staff (William O'Brien, Lewis Goldfarb, Gregory Ridella, et al.) ordered that my entire Chrysler office, including my office computer and computer files, be confiscated. These and other file materials remain in the possession of Chrysler counsel. Although not forthrightly presented in the February 17, 1995 letter of Chrysler General Counsel William J. O'Brien to NHTSA Counsel Kenneth N. Weinstein (Attachment 3), the December 16, 1994 confiscation of my office files, occurred during a NHTSA safety defect investigation, and:

A. Was planned and executed *ex parte*,
B. Occurred prior to my *ex parte* dismissal of December 27, 1994,
C. Occurred prior to entry of an *ex parte* "muzzle order" of December 27, 1994.

On the basis of these and many other facts, the accusation insinuated by defense counsel in the instant matter that I or plaintiff's counsel possess files that have not or will not be property produced is absurd.

Date: 12-13-2011

Paul V. Sheridan, Affiant

SUBSCRIBED AND SWORN TO BEFORE me this on December 13, 2011.

Notary Public

JACQUELYN REYNA
NOTARY PUBLIC, STATE OF MI
COUNTY OF WAYNE
MY COMMISSION EXPIRES Apr 16, 20
ACTING IN COUNTY OF Wayne

Affidavit Attachment 1

U.S. Department
of Transportation

**National Highway
Traffic Safety
Administration**

1200 New Jersey Avenue, SE
Washington, DC 20590

OCT 14 2011

David D. Dillon, Sr. Manager
Product Investigations and Campaigns
Chrysler Group LLC
800 Chrysler Drive, CIMS 482-00-91
Auburn Hills, MI 48326

Re: Request for modification of confidential treatment (PE10-031)

Dear Mr. Dillon:

On September 30, 2011, we received a submission from Paul V. Sheridan requesting that NHTSA modify an existing grant of confidential treatment for engineering drawings submitted by Chrysler Group LLC (Chrysler) in the above referenced investigation. Chrysler submitted this information on October 15, 2010 accompanied by a request for confidential treatment. That request for confidential treatment was granted on March 31, 2011.

NHTSA's October 15, 2010 letter granted your request for confidential treatment on the basis that the engineering drawings in the submission are subject to the class determination for blueprints and engineering drawings found in Appendix B of 49 C.F.R. § 512. As you are aware, Appendix B creates a presumption that release of certain classes of information, including engineering drawings, would be likely to cause a submitter to suffer substantial competitive harm.

Section 512.22 of Part 512 establishes authority for NHTSA's Chief Counsel to modify a prior grant of confidential treatment under certain conditions, including, but not limited to, the passage of time or a finding that a confidentiality determination was erroneous. We are construing Mr. Sheridan's submission as a request that the Chief Counsel consider modification of the March 31, 2011 determination under § 512.22.

Before taking further action in response to Mr. Sheridan's request, we ask that Chrysler state its position regarding the potential release of these drawings. A copy of Mr. Sheridan's submission is enclosed for your review. We request that you respond by October 31, 2011.

After October 24, 2011, intend to make a determination on how to respond to Mr. Sheridan's request. If the Chief Counsel believes that an earlier determination of confidentiality should be modified, you will be notified in writing and provided with an opportunity to respond in not less than twenty working days from the date of receipt of notice of modification. 49 C.F.R. § 512.22(b).

Sincerely,

Otto G. Matheke, III
Senior Attorney

Enclosure

cc: Paul V. Sheridan

FedEx Express
Customer Support Trace
3875 Airways Boulevard
Module H, 4th Floor
Memphis, TN 38116

U.S. Mail: PO Box 727
Memphis, TN 38194-4643

Telephone: 901-369-3600

October 2,2011

Dear Customer:

The following is the proof-of-delivery for tracking number **869667283746**.

Delivery Information:

Status:	Delivered	**Delivered to:**	Receptionist/Front Desk
Signed for by:	T.MAPP	**Delivery location:**	1200 N.J. AVE SE W41 306 20590
Service type:	Express Saver Pak	**Delivery date:**	Sep 29, 2011 13:11

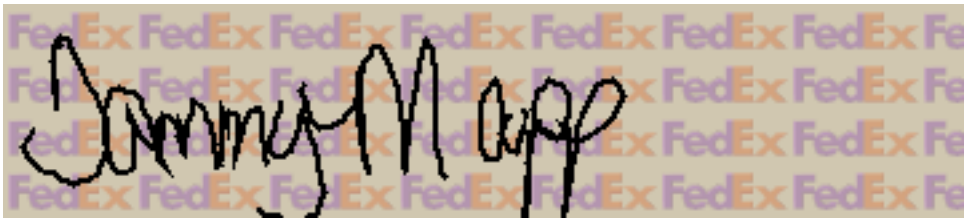

Shipping Information:

Tracking number:	869667283746	**Ship date:**	Sep 27, 2011
		Weight:	3.0 lbs/1.4 kg

Recipient:
MR DAVID STRICKLAND
NHTSA-WEST BLDG
1200 NEW JERSEY AVE S E
20590 US

Shipper:
PAUL SHERIDAN
SHERIDAN, PAUL V
22357 COLUMBIA ST
481243431 US

Reference PE-10031

Thank you for choosing FedEx Express.

FedEx Worldwide Customer Service
1.800.GoFedEx 1.800.463.3339

To: Mr. David L. Strickland *
NHTSA Headquarters/West Building
1200 New Jersey Avenue, SE
Washington, DC 20590
888-327-4236

Date: 27 September 2011 VIA FEDEX AIRBILL #8696-6728-3746

From: Mr. Paul V. Sheridan
DDM Consultants
22357 Columbia Street
Dearborn, MI 48124-3431
313-277-5095
pvs6@Cornell.edu

Reference : NHTSA Action Number PE10031
(Jeep Grand Cherokee Fuel System Crashworthiness Defect Investigation)

Subject : Chrysler Group, LLC Request for Confidential Treatment of Public Information

Courtesy Copy List

Mr. Clarence Ditlow, Director **
Center for Auto Safety
Suite 330
1825 Connecticut Ave, NW
Washington, DC 20009-5708
(202) 328-7700

Mr. Courtney E. Morgan, Jr. **
Morgan & Meyers, PLLC / Suite 320
3200 Greenfield Road
Dearborn, MI 48120
313-961-0130

Ms. Angel M. DeFilippo **
Grieco Oates & DeFilippo, LLC
414 Eagle Rock Avenue
West Orange, NJ 07052
973-243-2099

* *Available here:* http://links.veronicachapman.com/Sheridan2Strickland-2.pdf

** *Via Email*

DDM Consultants
22357 Columbia Street
Dearborn, MI 48124-3431
313-277-5095

27 September 2011 VIA FEDEX AIRBILL #8696-6728-3746

Mr. David L. Strickland, Administrator
NHTSA Headquarters
1200 New Jersey Avenue, SE
Washington, DC 20590
888-327-4236

Reference : NHTSA Action Number PE10031
(Jeep Grand Cherokee Fuel System Crashworthiness Defect Investigation)

Subject : Chrysler Group, LLC Request for Confidential Treatment of Public Information

Dear Mr. Strickland:

The Chrysler Group has requested the sealing of materials submitted to NHTSA in response to PE10031. This request was made by Mr. David D. Dillon on 15 October 2010 (Attachment 1). Mr. Dillon, who is deployed by the Chrysler Group as a defense witness in product litigation involving fire deaths and/or injuries in the1993 thru 2004 Jeep Grand Cherokee, stated in-part:

> *"The business information for which confidential treatment is sought is 20 engineering drawings . . . This submission is subject to the substantial competitive harm standard set forth in 49 C.F.R. § 512.15(b) . . . The engineering drawings contain the detailed design specifics for various components of two vehicles. Competitors could use this design information to improve their own designs without incurring the time and expense associated with independent design efforts. As a result, Chrysler Group's competitors could bring to market their products much quicker and at less cost."*

The purpose of this instant submission is to present why Dillon's demand, in this instance involving information that has been in the public domain for 25 years, is disingenuous. Although there are additional topics that support this status, I will restrict this presentation to six main topics:

1. Reverse Engineering and Anti-Reverse Engineering
2. Automotive Companies Practice of 'Competitive Teardown'
3. Competitive Information Office
4. Inter-Automotive Company Defections
5. Chrysler Group relationships with OEM Outside Suppliers (PS-7000)
6. Chrysler Group (MOPAR) relationships with Replacement/Aftermarket Suppliers

Reverse Engineering and Anti-Reverse Engineering

In far too many forums Chrysler Group defense lawyers (in particular) and internal government relations staff have declared that *"reverse engineering is impossible."* You should presume that such declarations are meant to insult our integrity and intelligence; other than outright inveracity, there is no other explanation for such preposterous outbursts.

Accredited four/five-year engineering degree programs (which fulfill Chrysler Group Personnel Office minimums for existing or potential Engineering Department staff) require core coursework in reverse engineering. An entry level engineer is expected to be familiar with and capable of this standardized, routinely taught skill. This is well-known.

Reverse engineering is not a matter of cheating or stealing. It is common that an organization will be forced to reverse engineer a component or system because, through the passage of time, documentation has been lost or mistakenly destroyed.

But the more strident examples of reverse engineering involve military hardware, and its implications for national defense. Reverse engineering is deployed to acquire detailed and exact information about devices and equipment that were created by a strategic opponent. In this context, Chrysler Group LLC is in a special position as an automotive company given its history of transferring Chrysler Defense Group and Chrysler Electronics Group engineers into their automotive engineering departments. I interacted with engineering and product development staff who exemplified this personnel history. In the opposite scenario, Chrysler defense lawyers would do well to educate themselves on the basic history of the Tupolev TU-4; a creation of the Soviet Union that was the result of the infamous reverse engineering of America's Boeing B-29 Superfortress. [1]

But we must stress an esoteric issue. In the area of strategic defense, high-end military suppliers are contractually obligated to include protection by use of anti-reverse engineering designs. If an opponent acquired U.S. military equipment, that opponent would be thwarted, at least for a time, from determining *"design information to improve their own designs without incurring the time and expense associated with independent design efforts."* [2]

By way of comparison and example, at no time did Mr. Francois Castaing, then Executive Vice President of Chrysler Engineering and Jeep Product Executive, direct that any aspect of any Chrysler product include anti-reverse engineering protections. Also, at no time was a requirement for anti-reverse engineering demanded of our suppliers, which provided up to 55% of Chrysler product content.

As will be detailed below, the moment a competitor acquires a Chrysler product, that product undergoes reverse engineering; a practice that is anything but impossible. The ability to reverse engineer a design that has been protected is difficult, but even that is far from impossible. But the 1993 ZJ-Body Jeep Grand Cherokee, that was designed over twenty years, can easily be reverse engineered. I can assure you our competitors did so immediately upon acquiring the ZJ-Body at market introduction in 1992

It is well-known to Chrysler government relations staff such as Mr. Dillon that reverse engineering in the automotive industry is routine, but that anti-reverse engineering protection is non-existent.

Automotive Industry Practice of 'Competitive Teardown'

As is well-known to Chrysler Group defense lawyers, I have testified about 'Competitive Teardown.' Excerpted below is a portion of my many prior expert reports in behalf of plaintiffs:

> *"Throughout my career at Chrysler, my duties pertaining to competitive automobiles included detailed review of competitive engineering of components and systems. Routinely competitive vehicles were fully dismantled by Chrysler technicians from the Competitive Teardown Office. This "teardown" function was/is an integral part of the engineering and product development process. Its purpose was/is to accumulate detailed engineering information of competitive component and system design. The teardown process resulted in the following report and review formats:*
>
> *a. The Competitive Teardown Review: These formal reviews were presented by the engineering staffs, and frequently attended by the highest levels of Chrysler executive management.*
>
> *b. Competitive Teardown Report: Documentation which was distributed throughout the Chrysler organization, including the highest levels of Chrysler executive management. These reports included detailed information about competitive components and subsystem content, cost, weight, supplier sources, etc.*
>
> *c. Reviews by individual engineering or product planning personnel as part of their day-to-day responsibilities. Typically the teardown components were displayed on vertically hung 4 x 8 sheets of plywood, for analysis and inspection by the individual engineering or product planning groups. This display area was affectionately referred to as "The Boards."*
>
> *d. Competitive Teardown Office visits: Involve open, non-formal inspection on an as-needed basis.*
>
> *As part of my duties at Chrysler I routinely provided managerial input on the selection of which competitive vehicles would be budgeted for teardown. To the best of my knowledge, the practice of Competitive Teardown Review continues at Chrysler to this day."*

During the last two decades no rebuttal to my above trial testimony has been offered into evidence by Chrysler defense lawyers. At no time during my 31-year involvement with the automotive industry has anyone decided that competitive teardown be suspended because *"reverse engineering is impossible."* It was never suggested that the internal funds allocated for Competitive Teardown be axed because it was not valuable, and that the budgetary savings be redirected to other engineering activities. As a former Engineering Programs Manager for Chrysler, I certainly never made any such suggestion.

From 1992 until my *ex parte* dismissal in 1994 I was Chairman of the Chrysler Minivan Safety Leadership Team (SLT). A member of the SLT was Mr. Fred Schmidt of Engineering Programs Management. Part of Mr. Schmidt's role included reports on the selection and scheduling of competitive teardowns. In this context, SLT review of "The Boards" was focused on acquisition of detailed information on competitive safety components and systems. One prominent example in this era was SLT review of competitive minivan liftgate latches that were compliant with FMVSS-206 (Attachment 2). [3]

Competitive Information Office

A standard practice within and among automotive companies is the open solicitation of competitive information directly from competitors. A part of Sales & Marketing, the Chrysler group responsible for this activity was the 'Competitive Information Office' (Attachment 3).

A two-year member of the Chrysler Minivan Safety Leadership Team (SLT) was Mr. Michael Delahanty. He would update the SLT regarding details of existing and anticipated competitive activity. Mr. Delahanty focused on competitive safety components and systems, and also upcoming competitive sales, marketing and advertising claims regarding safety.

Institutionalized inside the industry, Competitive Information Office activity is also known-to and endorsed by defense lawyers, as well as the highest levels of automotive executive management.

Inter-Automotive Company Defections

On June 14, 2011 I attended the deposition of Mr. Francois Castaing, former Executive Vice President of Chrysler Engineering and Jeep Product Executive. He was deposed in the Jeep Grand Cherokee fire-related death case of Kline vs. Lomans Auto Group, et al. [4] In preparation I provided a work file entitled 'Defections.' This file documents a plethora of employment defections between direct competitors at all levels of automotive engineers and executive management.

My file includes pronouncements regarding my former boss, Mr. Robert Lutz. [5] The 3 August 2001 front page Detroit News article, *"LUTZ RIDES IN TO REV UP GM: DCX LOSES VALUED ADVISOR"* explained with gala that Lutz would deploy the detailed information that he acquired during his twelve years at a direct competitor: Chrysler Corporation. But Mr. Lutz is just one example. To emphasize the relevant point made below, a small sampling of my Defections file follows:

1. "VW HIRES FORMER GM EXEC BROWNING AS PART OF SALES DIVISION OVERHAUL" Automotive News, 4 June 2010.
2. "EX-CADILLAC MAN HELPS INFINITI GO GLOBAL" Automotive News, 27 March 2009.
3. "CHRYSLER RECRUITS ANOTHER TOYOTA EXECUTIVE" Automotive News, 2 May 2008.
4. "GM HIRES EX-NISSAN EXEC MCNABB IN SALES REORGANIZATION" Automotive News, 26 Apr 2008.
5. "Chrysler hires Toyota's Meyer to lead global marketing" Automotive News, 15 August 2007.
6. "BIG 3 TALENT JUMPS SHIP TO RIVALS" The Detroit News, 25 April 2005.
7. "DAIMLERCHRYSLER HIGH RANKING OFFICERS LEAVE FOR FORD" Reuters, 1 March 1999.

8. "FORD RECRUITS PLANNER FROM DAIMLERCHRYSLER" Bloomberg News, 1 April 2000.

9. "GM HIRES AWAY PT CRUISER'S DESIGNER FROM DAIMLERCHRYSLER" WSJ, 23 April 2001.

10. "VW NAMES COST-CUTTING FORMER CHRYSLER EXEC TO TAKE OVER MAINSTAY BRAND" Detroit Free Press, 6 October 2004.

11. "DCX EXECUTIVES PINCH-HIT FOR FORD" Automotive News, 16 February 2004.

12. "BRAIN DRAIN: WHY ARE SO MANY TALENTED EXECUTIVES LEAVING FORD" Automotive News, 7 November 2005.

13. "AUDI HIRES MERCEDES MANAGER FOR MARKETING POSITION" Automotive News, 24 May 2006.

14. "FORD COMBATS RAIDS ON TOP DESIGNERS" Automotive News, 7 November 2005.

15. "CHRYSLER DESIGN STAR BOLTS TO FORD" The Detroit News, 2 May 2005.

16. "MITSUBISHI RECRUITS FORD JAPAN CHAIRMAN" Automotive News, 28 May 2002.

17. "GM hires Ford's Devine as CFO" Automotive News, 13 December 2000.

18. "LOVELESS LEAVES CHRYSLER TO JOIN KIA AS SALES CHIEF" Automotive News, 15 June 2007.

19. "MITSUBISHI REPLACES U.S. CEO WITH HYUNDAI'S O'NEILL" The Detroit News, 31 August 2003.

20. "FORMER FORD PR BOSS TO LEAD CHRYSLER PR" Automotive News, 18 December 2003.

21. "DAIMLERCHRYSLER NABS FORD MARKETING PRO" The Detroit News, 21 February 2001.

22. "VOLKSWAGEN CHOOSES FORMER BMW BOSS AS NEW CHIDE EXECUTIVE" The Detroit News, 8 September 2001.

23. "BMW POWERTRAIN LEADER TO HEAD FORD'S GLOBAL R&D" Automotive News,12 Dec 2000.

24. "ANOTHER FORD MAN WILL TRY TO SAVE MITSUBISHI" Automotive News, 1 April 2005.

25. "DAIMLERCHRYSLER HIRES LEADING GM EXECUTIVE" The Detroit News, 11 May 2000.

26. "VW MIGHT PICK OFF (DAIMLER'S) BERNHARD" Automotive News, 30 August 2004.

27. "NISSAN HIRES VP FROM FORD" Automotive News, 22 May 2003.

28. "OUSTED DAIMLERCHRYSLER EXEC FINDS HOME AT FORD" Automotive News, 26 March 2001.

29. "GM RECRUITS TOYOTA VET AS QUALITY EXPERT" Automotive News, 17 February 2003.

30. "GM VETERAN NAMED PRESIDENT OF TOYOTA" Automotive News, 28 June 2006.

This list of 30 samples is not diatribe; it is meant to serve a relevant point that can be exposed with a few obvious questions:

1. Are we to believe that the inter-automotive company defections, at the highest levels of executive management, are not facilitated by complicity among the corporate defense bar?

2. Are we to believe that the inter-automotive company defections, at all levels of engineering and executive management, were accompanied by "appropriate protective orders" regarding "confidential, proprietary and trade secret information" that was known to be in the possession of these defectors?

3. Are we to believe that recruitment of inter-automotive company defectors, including the highest levels of executive management, targeted only those individuals that were utterly ignorant of "confidential, proprietary and trade secret information"? Or is it well-known that the exact opposite was routinely targeted?

Regarding question #2, I have repeatedly advised plaintiff's, for over sixteen years, to discover such "appropriate protective orders." None can be legally discovered because none exist (Attachment 4). [6]

Chrysler Group relationship with OEM Outside Suppliers (PS-7000)

Defections of executive management are not restricted to OEM competitors, but extend to the automotive supplier base. A small sampling of that category from my Defections file includes:

A. "DANA NAMES GM MIKE BURNS CEO" Automotive News, 4 February 2004.

B. "AUTO SUPPLIER TAPS DAIMLERCHRYSLER EXEC AS CEO" The Detroit News,18 September 2002.

C. "HAYES-LEMMERZ HIRES FORMER FORD VP" Automotive News, 23 July 2002.

D. "GM'S HOGAN DEFECTS TO MAGNA" The Detroit News, 19 August 2004.

E. "EX FORD EXEC NOW HEAD OF COVIANT" Automotive News, 28 June 2002.

F. "FORD'S LIGOCKI LEAVES TO LEAD TOWER" Automotive News, 29 July 2003.

G. "DELPHI'S ALAPONT LEAVING FOR FIAT TRUCK UNIT" Automotive News, 4 September 2003.

H. "DURA HIRES FORMER FORD EXEC SZCZUPAK AS COO" Automotive News, 10 December 2006.

In view of defections to & from suppliers, we can also pose the same three questions about "appropriate protective orders." Again, no such protective orders have ever been sought by the defense bar, and none can be legally discovered.

But an important supplier issue involves Chrysler Group Engineering Standard PS-7000. This public document was first issued in 1979 (after the "Baker memo"). [7] Only minor revisions to PS-7000 have occurred. The Page 12 section "NON-CONFIDENTIALITY" remains in-force:

> *" It is Chrysler's policy not to enter into formal confidentiality agreements with its suppliers or potential suppliers.*
>
> *To foster the exchange of proprietary information or confidential information, Chrysler and the supplier shall rely on each other's ethics to handle each other's proprietary or confidential information in the same manner as each handles its own proprietary or confidential information. "*

In strict legal terms, the instant that Chrysler documents (such as the "*20 engineering drawings"* that Mr. Dillon claims are "*subject to the substantial competitive harm standard")* become the possession of suppliers, said documents become public. [8] Chrysler defense lawyers are fully aware of PS-7000. [9]

The following section provides specificity with respect to Mr. Dillon's "*20 engineering drawings."*

Chrysler Group (MOPAR) relationships with Replacement/Aftermarket Suppliers

The importance, participation and exposure of OEM's to the replacement/aftermarket industry extends to the Chairman of the Board. For example, both former Chrysler Chairman Robert Eaton and former DaimlerBenz Chairman Jűrgen Schrempp were featured on the front cover of SEMA News magazine. [10]

In this context please re-review the 8 January 2010 submission to DP09-005 by Mr. Clarence Ditlow, Director of the Center for Auto Safety (CAS). At their request I had forwarded to CAS pages of the Mitchell International Unibody and Chassis Frame Specifications and Dimensions Manual for the Jeep product line. Please note that I added highlights to emphasize the location and configuration of the defective fuel filler routing issue on ZJ-Body and WJ-Body Jeep Grand Cherokee vehicles.

But importantly, please note the copyright date on the lower portion of the Mitchell International drawings. Note that the 1996 ZJ-Body drawing has a copyright of 1996. Likewise, the 1999 WJ-Body drawing has a copyright of 1999. The 1993 ZJ-Body pages (the first year that the Jeep Grand Cherokee was available) similarly lists a copyright of 1993. Mitchell International, as just one of many aftermarket examples, relied on immediate access to detailed Chrysler drawing information for the purpose of servicing the replacement and aftermarket arena. Their well-known role is the dissemination of detailed specifications and design details which facilitate the work product of replacement and aftermarket suppliers for Chrysler vehicles. A prominent example, that is well-known to Chrysler defense lawyers, is the aftermarket manufacture and sale of Jeep Grand Cherokee **skid plates**.

In other words, the information contained on the *"20 engineering drawings"* that Mr. Dillon now claims *"is subject to the substantial competitive harm standard"* because *"competitors could use this design information to improve their own designs"* has continuously been in the public domain concurrent with each model-year introduction of the ZJ-Body and WJ-Body. This is consistent with the fact that PS-7000 also applies to the replacement/aftermarket part suppliers to Chrysler/MOPAR (Attachment 5).

Conclusions and Opinion

In my experience, the concept and legal enforcement of "trade secrets" in Detroit is entirely dependent on the context, and who/what are involved. You should react with suspicion when repeatedly confronted with the reality that so-called confidential information is alleged as such but only when either or both of the following categories are involved:

i. Product liability litigation
ii. NHTSA Safety Defect Investigations

But since he is an active defense witness in existing Jeep Grand Cherokee product litigation, the request made by Mr. David D. Dillon on 15 October 2010 involves both categories. Given the six main topics presented above, Mr. Dillon's claim that 25 year-old data is somehow being sought by competitors is beyond absurd; it is insulting on many levels. In my opinion you should deny the Chrysler Group LLC request that such information receive confidential treatment on at least one crucial basis:

> The alleged competitors would not view information that they already have in their possession as "trade secrets." In this instance, they would view the *"20 engineering drawings"* as confirmation of how **not** to design a fuel system.

Consequently, release of this information could save lives.

Respectfully and sincerely yours,

Paul V. Sheridan

Enclosures/Attachments

ENDNOTES

[1] Regarding PE10031, it is ostensibly suggested Chrysler defense lawyers and internal government relations staff that a massive intercontinental strategic nuclear weapons certified bomber could be reverse engineered, but regarding the 1993 thru 2004 Jeep Grand Cherokee "*reverse engineering is impossible.*"

[2] In the 1970's I was a personal friend of Dr. Frederick Arlotta, then Chief Systems Engineer at Grumman Aerospace in Bethpage, L.I., New York; assigned to the F-14 Tomcat program. I have been versed in the process of anti-reverse engineering for four decades.

[3] Please review NHTSA file EA94-005.

[4] Unless I am mistaken, the Kline death accident was an example of a highway accident statistic that was not originally included in the FARS data base.

[5] While working for the Dodge Truck Operation Group I reported to and frequently communicated one-on-one with Mr. Lutz.

[6] A typical further example is my former JTE supervisor, Mr. Chris Theodore. He originally worked for Ford Motor Company. Then he worked for General Motors. Then he worked for American Motors Corporation. Then he worked for Chrysler Corporation. After turning down employment solicitation from Nissan, he again worked for Ford Motor Company in 1999. In 1999 Theodore was interviewed by the Automotive News, and stated: "*There are no trade secrets in Detroit.*" Then he worked for at least two different outside suppliers to the Detroit automotive companies. (Mr. Theodore was also the Minivan Platform Engineer during EA94-005, who had insisted, contrary to my SLT, that the Chrysler AS-Body minivan single-stage liftgate latch, which could not comply with FMVSS-206, was not defective. However, Mr. Theodore never volunteered nor appeared to testify in open court regarding his technical rationale/justification for his opinion.)

[7] Please see Enclosure 4/Attachment 3 of the Paul V. Sheridan letter of 9 February 2011 to Mr. David L. Strickland.

[8] Ignore the watermark, placed by Chrysler defense lawyers, which claims that PS-7000 is subject to a protective order; it is not. Like the documents and information described therein, PS-7000 itself is routinely and firstly shared with outside suppliers and merely potential suppliers. The watermark ostensibly but falsely proclaims that a working document that declares non-confidentiality, is confidential (?). It is also common for Chrysler defense lawyers to routinely make documents as if subject to a protective order while being fully aware that such has/have already been in the public domain for years/decades. I have worked with <u>many</u> plaintiffs that were initially tricked by this ruse.

[9] As you are aware, the relationship between the OEM manufacturer and the outside supplier is so close that the latter is self-certified with respect to regulatory compliance with the Transportation Safety Act.

[10] As Chrysler Group LLC defense lawyers are fully aware, I am very active in the replacement and aftermarket (e.g. motorsports) arena. I am a 25-year member of the Specialty Equipment Market Association (SEMA), an annual attendee at the Performance and Racing Industry (PRI) show; I work on and maintain my own vehicles, and have built and driven national record holding race vehicles that have been featured in many automotive enthusiast magazines, etc.

Attachment 1

CHRYSLER

NHTSA
WASHINGTON, DC 20590

2010 OCT 18 P 4: 35

OFFICE OF CHIEF
COUNSEL

David D. Dillon
Sr. Manager
Product Investigations & Campaigns

October 15, 2010

Mr. O. Kevin Vincent
Chief Counsel
National Highway Traffic Safety Administration
1200 New Jersey Ave., SE, Room W41-227
Washington, DC 20590

Re: Request for Confidential Treatment of Business Information Submitted in PE10-031

Dear Mr. Vincent:

Chrysler Group LLC ("Chrysler") is submitting information to the NHTSA Office of Defects Investigation (ODI) in connection with the above referenced investigation. Based on a careful review of the submission, Chrysler Group has determined that some of the information is confidential and should be accorded confidential treatment under this agency's regulations at 49 C.F.R. Part 512 and Exemption 4 of the Freedom of Information Act ("FOIA"), 5 U.S.C. § 552(b)(4).[1] Therefore, Chrysler Group is submitting the enclosed CDs together with this request for confidential treatment to the Office of Chief Counsel.

The information required by Part 512 is set forth below.

A. Description of the Information (49 C.F.R. § 512.8(a))

The business information for which confidential treatment is being sought is 20 engineering drawings in Enclosure 4 CONF BUS INFO (Bates page #PE10-031-Chrysler-000001 - 000089).

B. Confidentiality Standard (49 C.F.R. § 512.8(b))

This submission is subject to the substantial competitive harm standard set forth in 49 C.F.R. § 512.15(b) for information that a submitter is required to provide to the agency.

[1] Chrysler Group has taken steps to assure that the CDs are free of any errors or defects that would prevent NHTSA from opening the files on the discs. If, however, the agency is unable to open the files, Chrysler Group respectfully requests that the agency inform Chrysler Group of the issue, so that Chrysler Group may take steps to supply NHTSA's Office of Chief Counsel with a disc that is fully functional.

Chrysler Group LLC | 800 Chrysler Drive | CIMS 482-00-91 | Auburn Hills, MI USA | 48326-2757

C. Justification for Confidential Treatment (49 C.F.R. § 512.8(c))

This agency's regulations and Exemption 4 of the Freedom of Information Act ("FOIA"), 5 U.S.C. § 552(b)(4), protect the confidentiality of information that would be likely to cause substantial competitive harm to the submitter if disclosed. *See, e.g.* 49 C.F.R. § 512.15(b) *National Parks & Conservation Ass'n v. Morton,* 498 F.2d 765, 770 (D.C. Cir. 1974). FOIA Exemption 4 was enacted to prevent disclosures that would "eliminate much of the time and effort that would otherwise be required to bring to market a product competitive with the [submitter's] product." *Public Citizen Health Research Grp. v. FDA*, 195 F.3d 898, 905 (D.C. Cir. 1999) "Because competition in business turns on the relative costs and opportunities faced by members of the same industry, there is a potential windfall for competitors to whom valuable information is released under FOIA. If those competitors are charged only minimal FOIA retrieval costs for the information, rather than the considerable costs of private reproduction, they may be getting quite a bargain. Such bargains could easily have competitive consequences not contemplated as part of FOIA's principal aim of promoting openness in government." *Worthington Compressors, Inc. v. Costle,* 662 F.2d 45, 51 (D.C. Cir. 1981). Substantial competitive harm also may result from disclosures that would reveal a firm's "operational strengths and weaknesses" to competitors. *See Nat'l Parks & Conservation Ass'n v. Kleppe,* 547 F.2d 673, 684 (D.C. Cir. 1976). The information at issue here should be protected under these standards.

The engineering drawings contain the detailed design specifics for various components of two vehicles. Competitors could use this design information to improve their own designs without incurring the time and expense associated with independent design efforts. As a result, Chrysler Group's competitors could bring to market their products much quicker and at less cost.

D. Class Determination (49 C.F.R. § 512.8(d))

The engineering drawings fall within the class determination for "blueprints and engineering drawings." 49 C.F.R. Part 512, App. B(1).

E. Duration for Which Confidential Treatment is Sought (49 C.F.R. § 512.8(e))

Because Chrysler Group anticipates that the information will be competitively valuable indefinitely, Chrysler Group requests that the information be accorded confidential treatment permanently.

F. Contact Information (49 C.F.R. § 512.8(f))

Please direct all inquiries and responses to the undersigned at:

800 Chrysler Drive, CIMS 482-00-91
Auburn Hills, MI 48326
248-512-0087
dd28@chrysler.com

***

If you receive a request for disclosure of the information for which confidential treatment is being sought before you have completed your review of our request, Chrysler respectfully requests notification of the request(s) and an opportunity to provide further justification for the confidential treatment of this information, if warranted.

Sincerely,

David D. Dillon

cc: Scott Yon
Lawrence Hershman

Attachment and Enclosures

Certificate in Support of Request for Confidentiality

I, David D. Dillon, pursuant to the provisions of 49 C.F.R. Part 512, state as follows:

(1) I am Chrysler Group LLC's Senior Manager, Product Investigations & Campaigns and I am authorized by Chrysler Group LLC to execute documents on its behalf;

(2) I certify that the information contained in the attached documents is confidential and proprietary data and is being submitted with the claim that it is entitled to confidential treatment under 5 U.S.C. 552(b)(4);

(3) I hereby request that the information contained in the indicated documents be protected on a permanent basis;

(4) This certification is based on the information provided by the responsible Chrysler Group LLC personnel who have authority in the normal course of business to release the information for which a claim of confidentiality has been made to ascertain whether such information has ever been released outside Chrysler Group LLC;

(5) Based upon that information, to the best of my knowledge, information and belief, the information for which Chrysler Group LLC has claimed confidential treatment has never been released or become available outside Chrysler Group LLC, except to certain contractors of Chrysler Group LLC with the understanding that such information must be maintained in strict confidence;

(6) I make no representations beyond those contained in this certificate and, in particular, I make no representations as to whether this information may become available outside Chrysler Group LLC because of unauthorized or inadvertent disclosure (except as stated in paragraph 5); and

(7) I certify under penalty of perjury that the foregoing is true and correct.

Executed on this 15th day of October, 2010

David D. Dillon

Attachment 2

Inter Company Correspondence

Code (sentra) Date June 14, 1991

To–Name & Department CIMS Number

SEE BELOW

From–Name & Department CIMS Number

D. M. Fitzpatrick | Manager-Technical Cost Planning | Chrysler Center | 414-08

Subject:

TO:
R.R. Boltz
F.J. Castaing
J.G. Damoose
T.C. Gale
R.A. Lutz
D.K. Pawley
T.R. Cunningham
T.W. Sidlik
T.T. Stallkamp
G.C. Valade

1991 Nissan Sentra E - Design Cost Study

As a follow-up to the May 12, 1991 teardown review of the 1991 Sentra, you will find attached a cost comparison to the 1994½ PL-Body.

As the cost summary shows, it is estimated that on a design basis the cost of the Sentra exceeds the PL by approximately $185. Adjusting for the difference between the PL driver and passenger side air bag system and the Sentra motorized seat belt system, the design cost of the Sentra is approximately $385 over the PL.

Sentra has a number of interesting features that are summarized on page 2.

The contents of this report are:

	Page
• Overview - "Sentra Features"	2
• Dimensional Comparison	3
• Weight Comparison	4
• Summary of NVH Items	5
• Potential Cost Reduction Items	6
• Cost Summary	7
• Detailed Cost Analysis	8

The sectioned shell and all individual components are in the Competitive Teardown area in the basement of the W.P. Chrysler Building.

D.M. Fitzpatrick

Attachments
cc: Distribution List

SENTRA FEATURES

The Sentra was extremely quiet and "stiff" feeling for a $9,300 car. Dis-assembly showed several NVH and body structural items that were on $30,000 to $40,000 cars that contributed to the vehicle's solid feeling.

- Dash Panel Doubler - a NVH item made from a mastic backed .026 steel panel that extends from plenum to front floor pan and wheelhouse to wheelhouse.

- Floor pan mastic is used with varying thicknesses on the front and center floor, plus, beneath the rear seat cushions. There are additional patches on the cowl plenum lower panel, in the trunk spare tire well and on the rear wheelhouses. Unique is the double layer of mastic on the tunnel at the rear seat cushion and an additional insulator of different material on the floor pan at the rear seat cushion front edge.

- This is the first vehicle that we have dis-assembled that has a hydraulically dampened right side engine mount with three other more "standard" type mounts, an added anti-roll lever and a dedicated isolated engine mount (north/south) crossmember.

- All plastic to plastic contacts in the instrument panel, garnish/trim moldings, console and door pull panels have anti-squeak strips.

- Triple door seals are used, including; a full door surround, door opening upper flange cover and weather seal assembly, and a seal and drip edge that extends from the A-pillar, along the roof and down the C-pillar. (Sentra also has a door to door seal at the B-pillar to close the gap between the doors from the belt to the roof).

- Vehicle stiffness has been accomplished by the use of many frame rail doublers, crossmember reinforcements, added floor pan components and well engineered body panels.

- The Sentra has a two position cam timing system consisting of hydraulic activated helical gears that are activated by an electro-hydraulic solenoid which is monitored by the engine controller.

- The pistons are molybdenum coated for reduced friction.

- A dual chain cam drive system for improved valve train and cylinder head packaging.

Attachment 3

Inter Company Correspondence

To—Name & Department	Telephone	Date
	776-2909	January 27, 1993

From—Name & Department		CIMS Number
Please See Below		
R. A. Winter	General Product Manager - Minivan Operations C.T.C.	482-08-02

Subject: **Minivan Safety Leadership Team (SLT)**

TO:
D.P. Bostwick
T.M. Creed
D.E. Dawkins
R.L. Franson
M.R. Levine
T.S. Moore
J.W. Rickert
P.M. Rosenfeld
S.T. Rushwin
F.I. Sanders
R.A. Sarotte
C.P. Theodore
S.A. Torok

Safety has been an important consideration among Minivan buyers, and Chrysler has enjoyed a leadership position with the implementation of driver's air bag and child seats. The competition has passed us in 1993 by meeting passenger car safety standards, but we will retake the lead in 1994 with passenger side air bags.

In order to maintain our leadership position in this segment we need to provide a vehicle that has the most important safety attributes, and to that end the Minivan Safety Leadership Team is being formed. The purpose of the team is to re-establish Chrysler's advertisable safety leadership position, with particular emphasis on the NS-Body. The general format will focus effort in the areas of "Accident Avoidance", "Accident Survival" and other security issues, and the team will avail itself to all sources of expertise/assistance.

Attached is the current membership listing. Your support/awareness of this activity will enhance the ability of the team in this extremely important task. Your comments are welcome.

R.A. Winter

/sem
RAW#8\sltmemo

Attachment

NS-BODY
SAFETY LEADERSHIP TEAM (SLT)

- **Background**

  - Through its aggressive implementation of the air bag, and other safety related features, Chrysler enjoyed an advertisable safety leadership position through the 1990/1991 timeframe.

  - Current and projected competitive activity in the area of safety will erode our leadership position to that of parity, especially in the minivan segment.

- **Purpose/Mission Statement**

  - Accurately assess our current and projected status in the area of safety, using the following as a basis for discussion:

    ▹ 1995 AS-Body exit levels

    ▹ Documentation/specification of regulatory compliance plans

  - Define specific additional requirements/actions to re-establish an advertisable leadership position.

  - Focus will be on the NS-Body and the minivan segment, but SLT activity will be formatted to be transferrable/accessible to other platforms.

  - Monitor safety innovations.

  - Monitor competitive activity.

  - Estabilish/monitor consumer acceptance.

- **Format**

  - It is proposed that the SLT examine the safety leadership issue in the context of the following categories:

    ▹ Accident Avoidance
      - ABS
      - Traction Control/Enhancement
      - Speed Dependent Steering
      - Active Suspension
      - Driver Information Enhancement

- **Format** (continued)

  - ▹ Accident Avoidance (continued)
    - – Exterior Lighting/Signaling
    - – Mirrors/Visibility
    - – Back-up Alert

  - ▹ Accident Survivability
    - – Air Bags (Active)
    - – Occupant Restraints (Passive and Active)
    - – Crash Management
    - – Crash Intrusion
    - – Bumper Integrity
    - – Side Impact
    - – Roof Crush
    - – Rollover
    - – Seat Back Strength
    - – Headrests
    - – Glass Retention

  - ▹ Other
    - – Anti-theft
    - – Security Systems
    - – Mechanical Reliability
    - – Communications
    - – Comfort (anti-fatigue)
    - – IVHS

- **Organization/Membership**

  - Minivan Operations (Chair)
  - Safety Office
  - Engineering
  - International Operations
  - Liberty
  - Marketing
  - Sales
  - Design Office
  - Competitie Information Activity

  - ▹ Additional organization involvement will occur as appropriate.

- **Other**

  - To be effective, the SLT will require <u>empowerment</u> via executive level recognition of the SLT mission, and resultant dedication of staff support.

  - Meeting time tentatively set to alternate with existing Minivan Complexity Team on Tuesdays, 8:15 - 9:00 a.m.

  - Initial agenda priority will be review of the NS-Body ABS strategy.

NS-BODY
SAFETY LEADERSHIP TEAM (SLT)

MEMBERSHIP

Organization	Representatives	CIMS	Telephone	Telefax
Minivan Operations*	Paul V. Sheridan	482-08-02	776-4824	776-2261
Safety Office	Ronald S. Zarowitz	415-03-21	876-1126	822-5069
Engineering	TBD			
International Operations	Gregory A. Blindu	415-03-05	876-5983	876-4752
Liberty	TBD			
Marketing	William H. Hines (Dodge) Mark W. Clemons (C/P)	414-04-40 414-04-35	876-5523 876-3763	822-6957 822-6957
Sales	James L. Boeberitz	414-05-29	876-3942	822-7431
Design	TBD			
Competitive Information Activity	Michael T. Delahanty	414-02-16	876-1464	876-4241

*Chair

Attachment 4

Inter Company Correspondence

Telephone | Date: August 16, 1990

To — Name & Department | CIMS Number

All Executive Engineers

From — Name & Department | CIMS Number

H. W. Roush — Group Human Resources Manager - Vehicle Engineering and Product Design — 418-01-31

Subject:

POINTS FOR COMMUNICATIONS

1. Recruiting - as of 8/15/90

   . July 8 newspaper ad -- 334 responses -- 103 resumes referred to operating levels.

   . August 8 Lendman Career Fair -- 271 interviewed -- 58 resumes referred to operating levels.

   . 15 Engineers have been in for interview to date.

   . Ad for NVH Specialists will run in "Sound and Vibration" Trade Magazine - September issue.

2. Resignations

   As of August 3 -- our total for the year was 69 -- compared to 73 for all of 1989. 31 of the 69 have gone to Ford.

3. Engineers in the News

   . In a special issue of Ebony (August, 1990), Vera Trueblood, an engineer in the Minivan Platform group, is profiled as a successful role model who was recognized as a cost conscience team player by winning the 1989 Chairman's Award. She is a member of Vehicle Engineering's Minority Recruiting team and is also a member of the Board of Directors for the Detroit Urban League.

   . The 1990 International Symposium on Electromagnetic Compatibility will be held in Washington, D.C. from August 21 to 23. This gathering will showcase a research paper co-authored by James P. Muccioli and Scott Ashley. Mr. Muccioli, Scott's supervisor, is part of Small Car Platform under D. E. Florence's group. Mr. Ashley is a Chrysler Institute of Engineering (CIE) student.

4. General Communications

   The only certainty about communications is that "information" gets passed around every day. Rumors start when people do not know the facts and the reasons behind the facts.

It is not always easy to communicate facts to all areas of the work force -- and - even when we are able to do that -- circumstances can change and the application of factual information will sometimes vary in response to the changes.

We need to continue the emphasis on communications and pass along balanced news. The future of our Corporation is bright and we must continue to emphasize that fact.

Consider some points communicated by Chris Theodore in recent employee meetings:

. The current situation isn't even close to 1980. What we tend to forget is that many of our people were not here in 1979/1980 -- so this is a new and disconcerting time for them.

. The last eight years of prosperity is unprecedented in American automotive history.

. For those people too young to remember - the auto industry has been historically cyclical -- a downturn approximately every four years.

. Chrysler has the most dedicated product development plan in its history. Most major new products will be domestically engineered. Strategic emphasis is on the automobile manufacturing business.

. We are dedicated to our people and are making every effort to keep them.

. We are communicating more with employees and attempting to understand and address their concerns and problems.

. With our organization in transition, there is a lot of mis-information going around. When you hear or read something -- stop and consider the source -- do the facts support the conclusion? -- does it make sense? --- when in doubt ask your supervisor -- we are committed to getting you an answer.

H. W. Roush

bk
cc: J. Bahm
F. Castaing
T. Gallagher
C. Gardner
J. Mallebay-Vacqueur
R. P. Marcell
T. Moore
J. Nemeth
B. Robertson
R. Rossio
R. Torigian
S. Unger

communic.hwr

Attachment 5

Howell, Rosa (NHTSA)

From: Hershman, Larry (NHTSA)
Sent: Tuesday, January 12, 2010 9:28 AM
To: Howell, Rosa (NHTSA)
Cc: Yon, Scott (NHTSA)
Subject: FW: Jeep Grand Cherokee Fuel System Petition

Rosa,
Here is another supplement to the Jeep Grand Cherokee petition, file # DP09-005, for inclusion into Artemis.
Thanks,
Larry

From: Demeter, Kathleen (NHTSA)
Sent: Monday, January 11, 2010 11:47 AM
To: Hershman, Larry (NHTSA)
Subject: FW: Jeep Grand Cherokee Fuel System Petition

Another submission

From: Clarence Ditlow [mailto:cmdiii@autosafety.org]
Sent: Friday, January 08, 2010 9:58 PM
To: Demeter, Kathleen (NHTSA)
Cc: Yon, Scott (NHTSA)
Subject: Jeep Grand Cherokee Fuel System Petition

Please include and consider in our petition the attached drawings scanned from the Mitchell International 'Unibody and Chassis Frame Specifications and Dimensions Manual.' These manuals are used routinely inside the automotive OEM and repair/service industry.

Please note the mark-ups of the Jeep frame section drawings that depict the location (or lack-thereof) of the fuel filler tube pass-thru holes. The yellow comment boxes have been added only to highlight the subject locations.

At the Center's request, Paul Sheridan has personally inspected many model-year versions of Jeep Cherokee and Jeep Grand Cherokee vehicles to confirm that the fuel filler tube is made of rubber and passes through the frame rail in 1993-98 Jeep Grand Cherokees and under the frame rail in 1999-04 Jeep Grand Cherokees. We are sending out another investigator to examine Grand Cherokees in Florida to confirm this information. Also attached are detailed photos of the steel filler neck, the rubber filler tube and the plastic tank in the Grand Cherokee examined by MVFRI.

This is a defective design of the fuel filler tube whose performance is not measured by FMVSS 301.

Please do not hesitate to contact me as needed.

Paul Sheridan

Clarence Ditlow
Executive Director
Center for Auto Safety
1825 Connecticut Ave NW
Washington DC 20009

DP09-005
ATTACHMENT

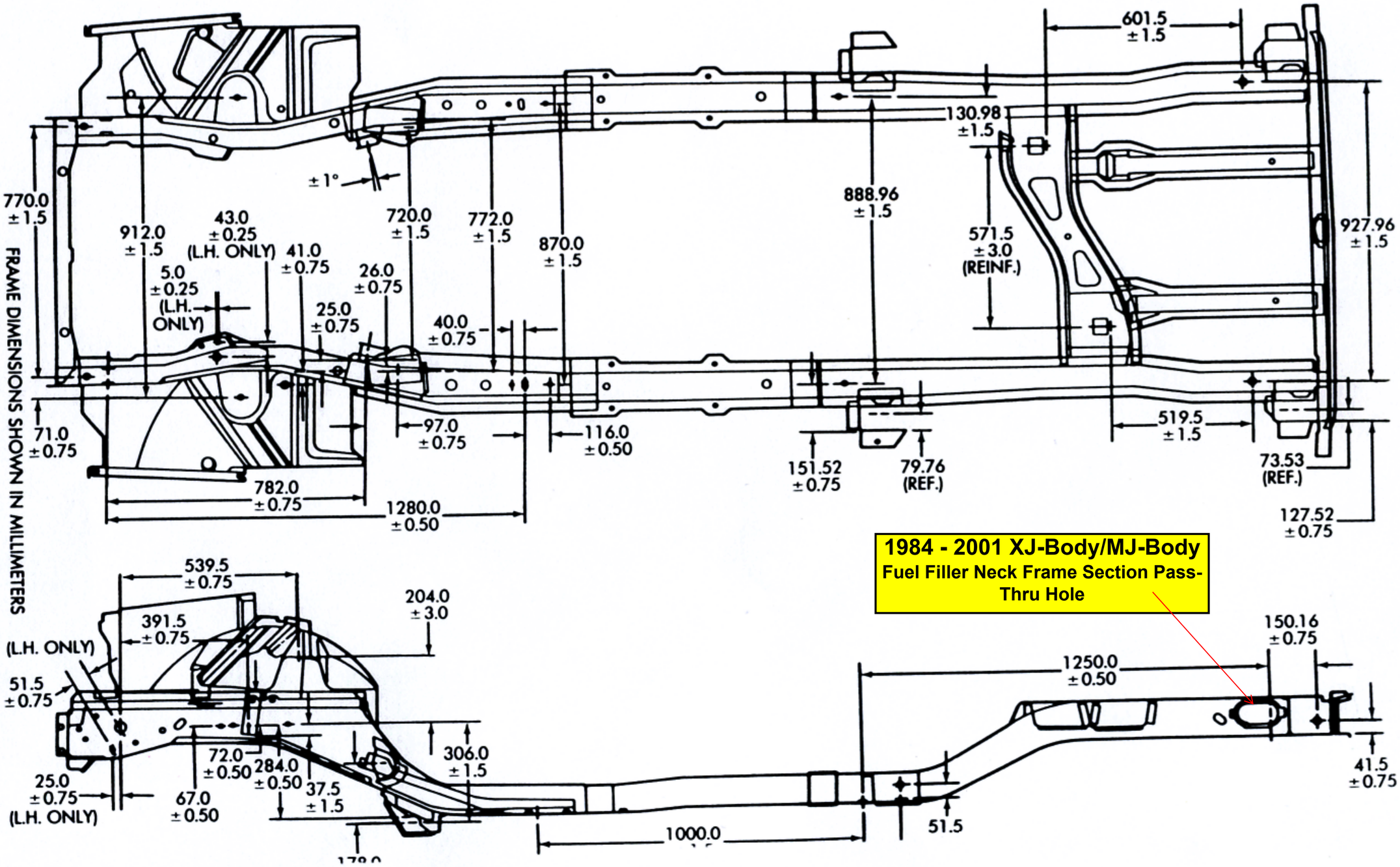

1984 - 2001 XJ-Body/MJ-Body
Fuel Filler Neck Frame Section Pass-Thru Hole

Fig. 2 Frame Alignment Reference Dimensions—XJ Vehicles

1996 JEEP GRAND CHEROKEE 2WD/4WD

105 15/16" (2691mm) WHEELBASE

UNDERHOOD VIEW

UNDERHOOD VIEW POINT-TO-POINT DIMENSIONS ARE TAKEN WITH TRAM BAR POINTERS SET AT EQUAL LENGTHS.
Bolts and Studs are Measured to Center.
Holes are Measured to Closest Edge.

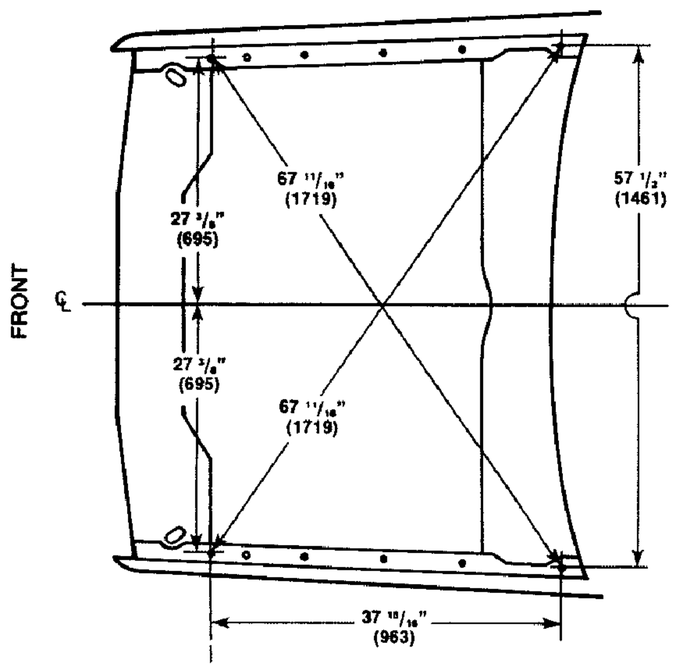

BOTTOM VIEW

BOTTOM VIEW POINT-TO-POINT DIMENSIONS ARE TAKEN WITH TRAM BAR POINTERS SET AT EQUAL LENGTHS.
Bolts and Studs are Measured to Center. Holes are Measured to Closest Edge.

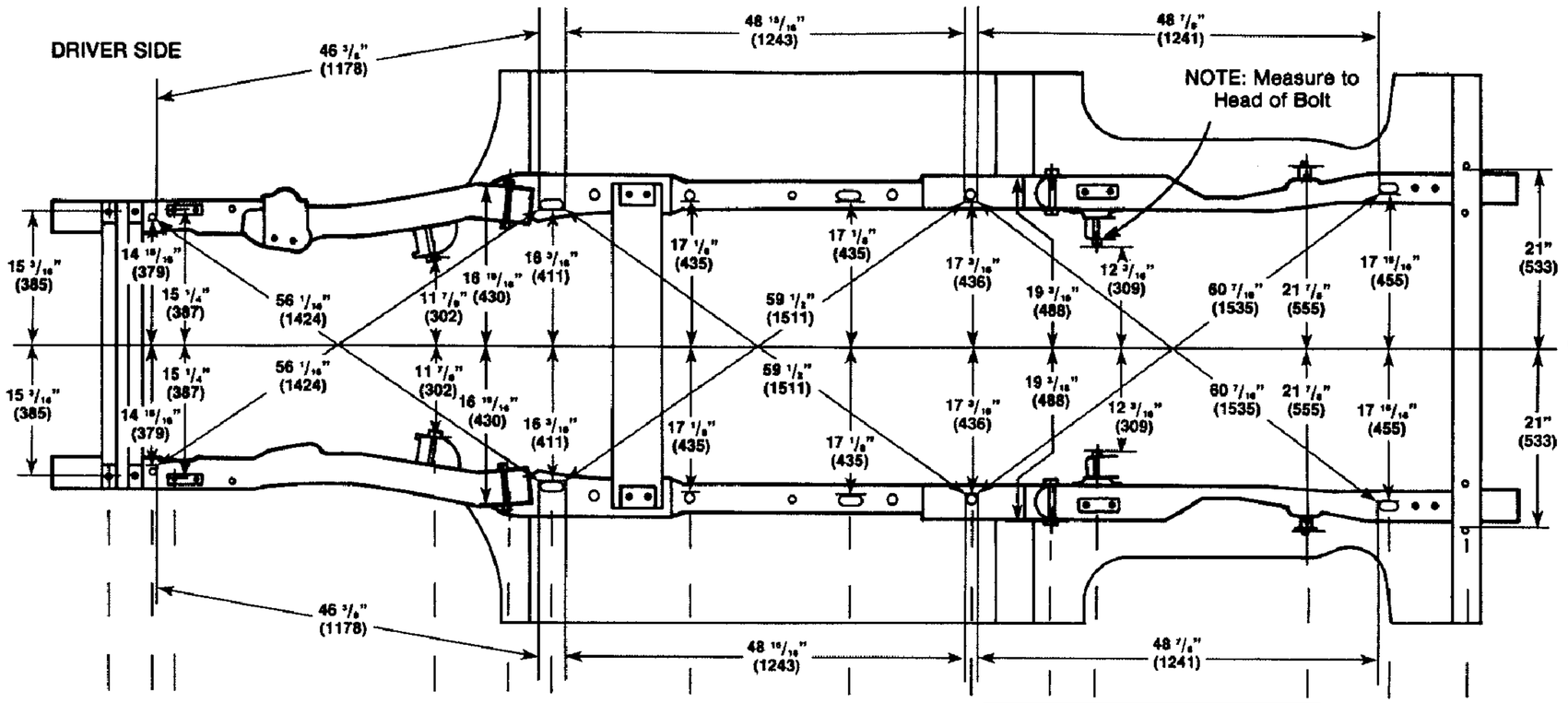

1993-1998 ZJ-Body:
Fuel Filler Tube
Frame Section
Pass-Thru Hole

See "C" for Datum Height and Length

Top of Front Fender Bolt on Core Support

SIDE VIEW

Datum Height Dimensions are PERPENDICULAR to Datum Plane.
Datum Length Dimensions are PARALLEL to Centerline of Vehicle, and are Measured Center-to-Center.

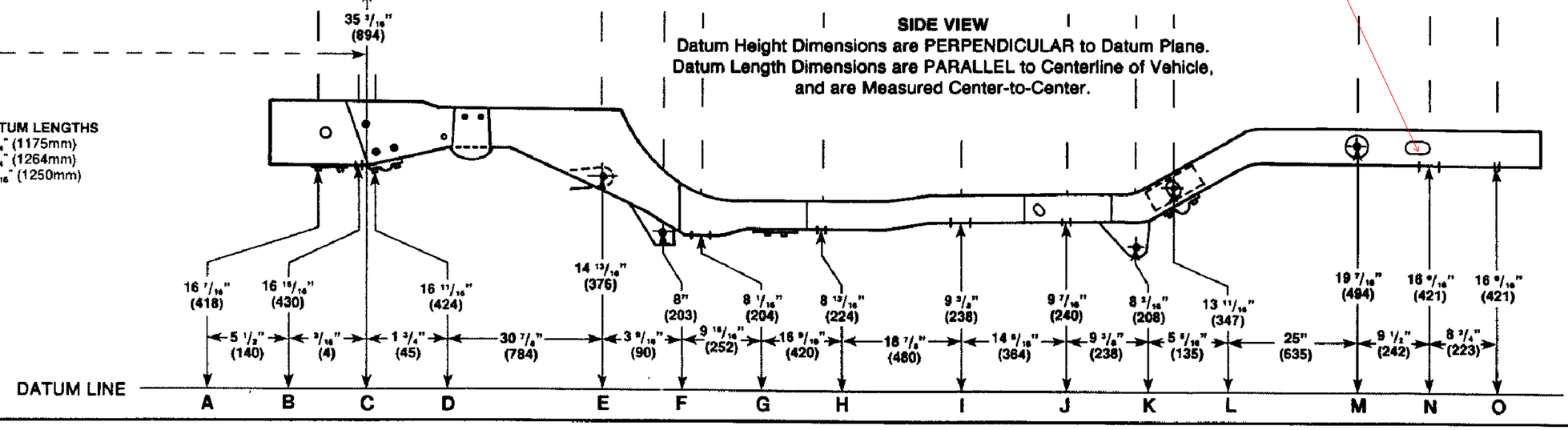

MEASURING POINTS

- A = Bolt
- B = 9/16" (14) - Threaded Hole
- C = Front Fender Bolt
- D = Bolt
- E = Bolt
- F = Bolt
- G = 3/4" x 1" (19 x 25)
- H = 3/4" (19)
- I = 3/4" x 1" (19 x 25)
- J = 3/4" (19)
- K = Bolt
- L = Bolt
- M = Bolt
- N = 3/4" x 1" (19 x 25)
- O = 1/2" (13)

OVERALL DATUM LENGTHS

B to G = 46 1/4" (1175mm)
G to J = 49 3/4" (1264mm)
J to N = 49 3/16" (1250mm)

SEE PROCEDURE EXPLANATION

© 1996 MITCHELL INTERNATIONAL

UNDERHOOD VIEW

UNDERHOOD VIEW POINT-TO-POINT DIMENSIONS ARE TAKEN WITH TRAM BAR POINTERS SET AT EQUAL LENGTHS.
Bolts and Studs are Measured to Center.
Holes are Measured to Closest Edge.

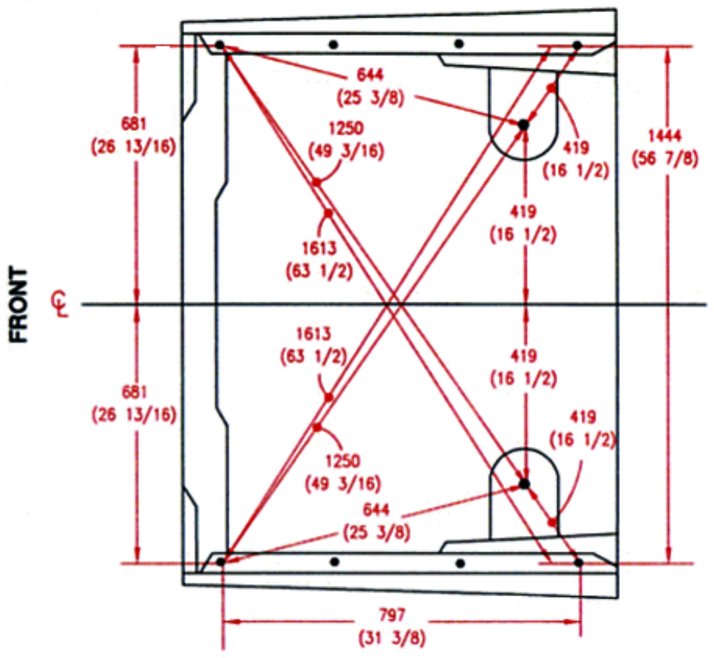

BOTTOM VIEW

BOTTOM VIEW POINT-TO-POINT DIMENSIONS ARE TAKEN WITH TRAM BAR POINTERS SET AT EQUAL LENGTHS.
Bolts and Studs are Measured to Center.
Holes are Measured to Closest Edge.

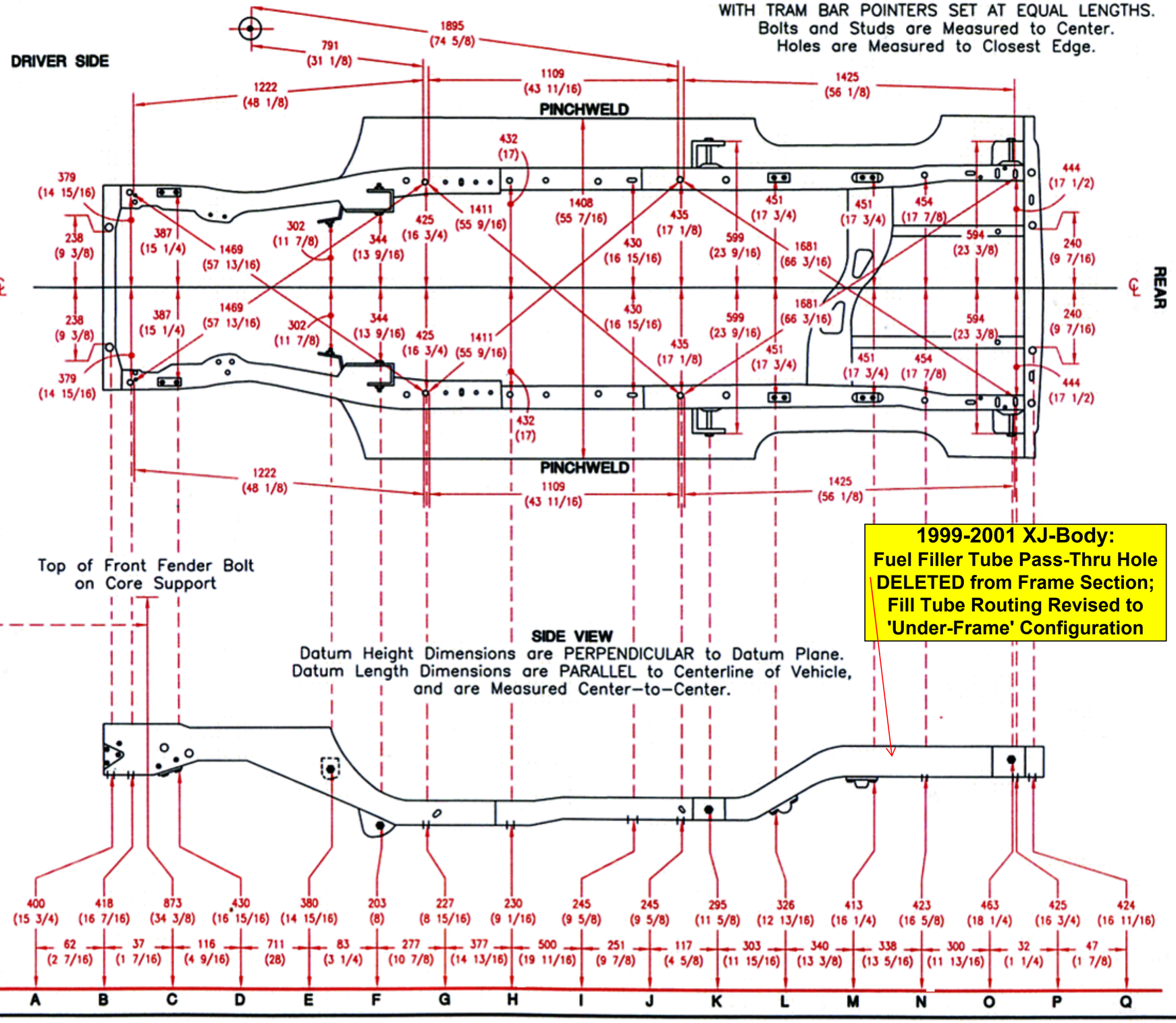

See "C" for Datum Height and Length

Top of Front Fender Bolt on Core Support

1999-2001 XJ-Body:
Fuel Filler Tube Pass-Thru Hole DELETED from Frame Section; Fill Tube Routing Revised to 'Under-Frame' Configuration

SIDE VIEW

Datum Height Dimensions are PERPENDICULAR to Datum Plane.
Datum Length Dimensions are PARALLEL to Centerline of Vehicle, and are Measured Center-to-Center.

MEASURING POINTS

A = 26 (1)
B = 16 (5/8)
C = Front Fender Bolt
D = Bolt
E = Bolt
F = Bolt
G = 19 (3/4)
H = 19 (3/4)
I = 26 x 32 (1 x 1 1/4)
J = 19 (3/4)
K = Bolt
L = Bolt
M = Bolt
N = 19 (3/4)
O = Bolt
P = 13 x 20 (1/2 x 13/16)
Q = 22 (7/8)

DS = Driver Side
PS = Passenger Side

OVERALL DATUM LENGTHS

B to G = 1224 (48 3/16)
G to J = 1128 (44 7/16)
J to P = 1430 (56 5/16)

© 1999 MITCHELL INTERNATIONAL

SEE PROCEDURE EXPLANATION

1999 JEEP GRAND CHEROKEE 4WD

2690 (105 7/8) WHEELBASE

UNDERHOOD VIEW

UNDERHOOD VIEW POINT-TO-POINT DIMENSIONS ARE TAKEN WITH TRAM BAR POINTERS SET AT EQUAL LENGTHS.
Bolts and Studs are Measured to Center.
Holes are Measured to Closest Edge.

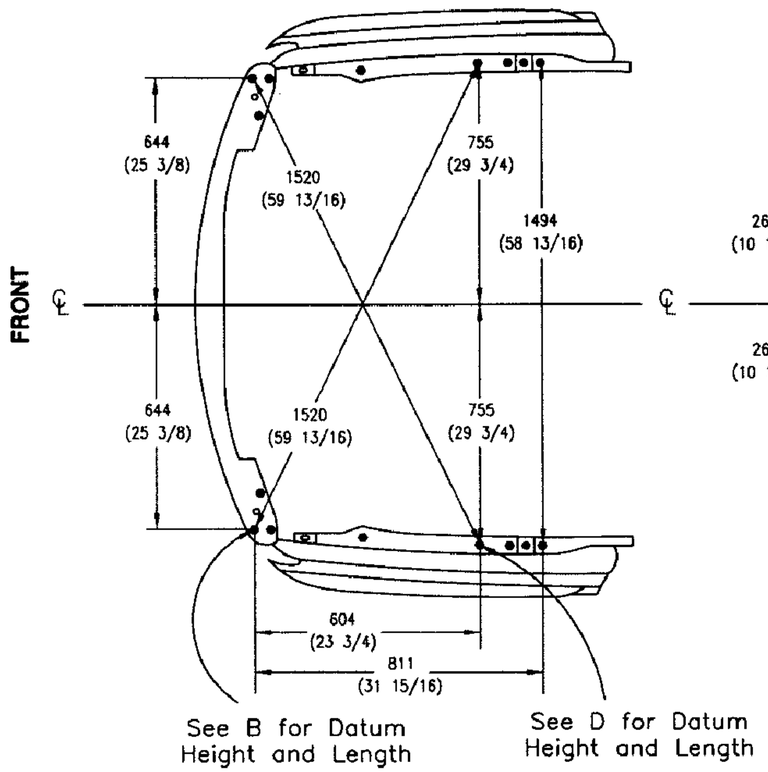

NOTICE

All Dimensions to Bolts ON THIS PAGE are Measured to Head or Tip.

BOTTOM VIEW

BOTTOM VIEW POINT-TO-POINT DIMENSIONS ARE TAKEN WITH TRAM BAR POINTERS SET AT EQUAL LENGTHS.
Bolts and Studs are Measured to Center.
Holes are Measured to Closest Edge.

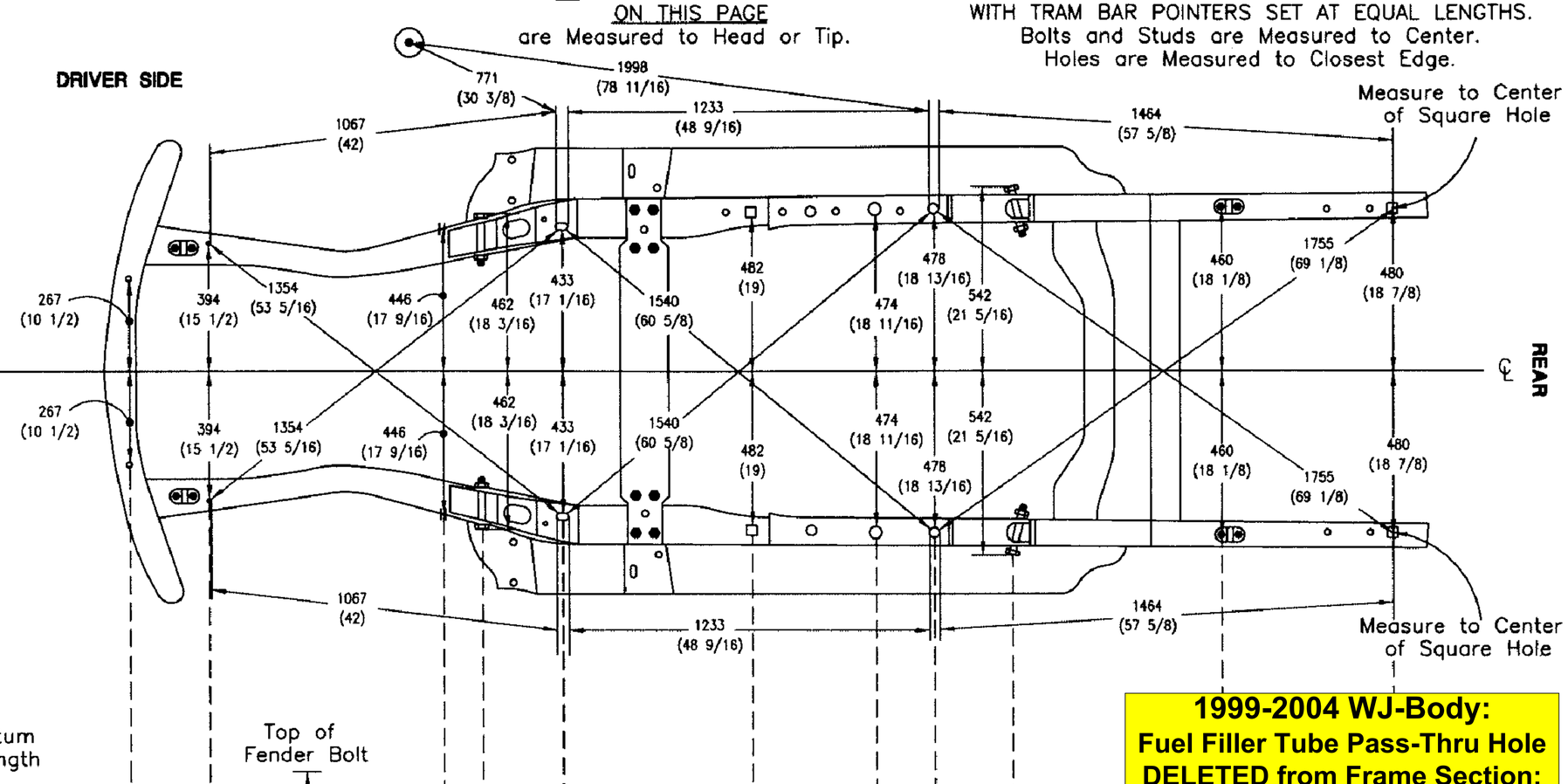

1999-2004 WJ-Body:
Fuel Filler Tube Pass-Thru Hole DELETED from Frame Section;
Fill Tube Routing Revised to 'Under-Frame' Configuration

SIDE VIEW

Datum Height Dimensions are PERPENDICULAR to Datum Plane.
Datum Length Dimensions are PARALLEL to Centerline of Vehicle, and are Measured Center-to-Center.

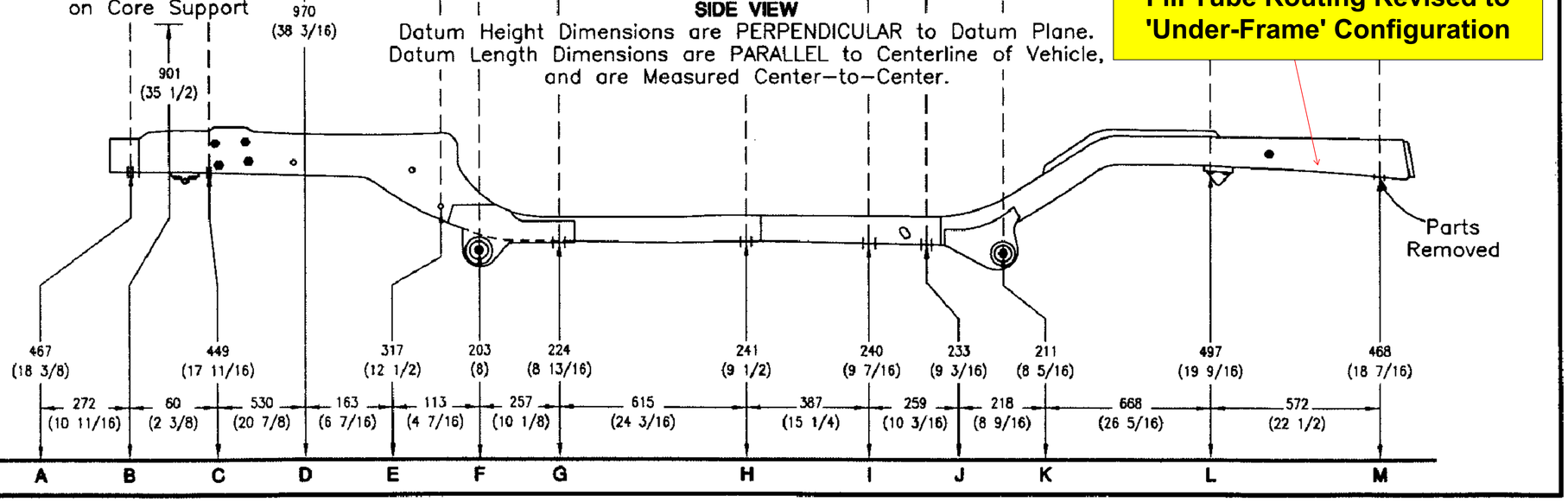

MEASURING POINTS

- **A** = 14 (9/16)
- **B** = Bolt-Core Support
- **C** = 8 (5/16) Threaded Hole
- **D** = Fender Bolt
- **E** = 12 (1/2)
- **F** = Bolt
- **G** = 17 x 33 (11/16 x 1 5/16)
- **H** = 19 x 19 (3/4 x 3/4) Square Hole
- **I** = 33 (1 5/16)
- **J** = 25 (1)
- **K** = Bolt
- **L** = Bolt
- **M** = 19 x 19 (3/4 x 3/4) Square Hole

OVERALL DATUM LENGTHS

- C to G = 1063 (41 7/8)
- G to J = 1261 (49 5/8)
- J to M = 1458 (57 3/8)

DS = Driver Side
PS = Passenger Side

SEE PROCEDURE EXPLANATION

© 1999 MITCHELL INTERNATIONAL

PICK
A03045L
1
(C5160000)

Attachment 6

OUTSIDE DESIGNED AND DEVELOPED ITEMS (ODD BOX ITEMS)

ABSTRACT

This process standard establishes the business relationship between Chrysler Corporation and Suppliers of outside (supplier) design and development (ODD Box) items. An ODD Box is a part, assembly, component, or sub-system designed, developed, tooled, and produced by a supplier or jointly by a supplier

CONTENTS

Topic	Paragraph	Page
General	1.0	2
Organizations Identified in this Standard	2.0	2
Chrysler Approval of a Supplier	3.0	2
Design	4.0	3
Drawings/CATIA Models	5.0	3
Supplier Specifications (Standards)	6.0	4
Use of Approved Subsources	7.0	4
Safety, Regulatory, Regulated Substance, Recyclability, & Export Compliance	8.0	4
Start of Production Tooling	9.0	6
Construction and Certification of Tooling Aids	10.0	6
Control of Changes	11.0	6
Record Retention	12.0	7
Quality Assurance	13.0	7
Warranty Responsibilities	14.0	9
Serviceability and Service Parts Requirements	15.0	9
Control	16.0	10

APPENDICES

A Intellectual Property Rights, Disclosure, and Non-Confidentiality	11
B Glossary (Including Definitions)	12

A single asterisk "*" after the paragraph header denotes a technical change to the paragraph. A triple asterisk before and after an item (*** text ***) identifies the specific changed text.

Date	Mdl. Yr. Eff. Code & Disp Code	PCN No.	Change	Text Changes and Cancellations
6/26/95	Editorial	J	Certain references updated	
10/31/94	Editorial	H	Revised FMEA reference	

Date Issued 10/25/79 Dept 2610 Contact Supv., Engr. Stds. & Info. Services

IMPORTANT: Chrysler Corporation standards, specifications and drawings are subject to frequent revision. It is the users' responsibility to comply with current versions. Distribution of standards to parties other than Chrysler Corporation suppliers, whether with or without charge, is for information only. A subscription service is available at reasonable cost, which will automatically provide the subscriber with current standards. Subscription information or copies of current standards are available from the Engineering Standards & Information Services Department, Vehicle Engineering Office, Chrysler Corporation.

Order Thomas vs. DaimlerChrysler Corporation
Subject to protective

C References

Subject to protective Order - Thomas vs. DaimlerChrysler Corporation

A single asterisk "*" after the paragraph header denotes a technical change to the paragraph. A triple asterisk before and after an item (*** text ***) identifies the specific changed text.

Date	Mdl. Yr. Eff. Code & Disp Code	PCN No.	Change	Text Changes and Cancellations
6/26/95	Editorial	J	Certain references updated	
10/31/94	Editorial	H	Revised FMEA reference	

Date Issued 10/25/79 Dept 2610 Contact Supv., Engr. Stds. & Info. Services

IMPORTANT: Chrysler Corporation standards, specifications and drawings are subject to frequent revision. It is the users' responsibility to comply with current versions. Distribution of standards to parties other than Chrysler Corporation suppliers, whether with or without charge, is for information only. A subscription service is available at reasonable cost, which will automatically provide the subscriber with current standards. Subscription information or copies of current standards are available from the Engineering Standards & Information Services Department, Vehicle Engineering Office, Chrysler Corporation.

This standard is for use in supplying certain parts under purchase orders of Chrysler Corporation or its subsidiaries. This standard is limited in its application to those drawings, CATIA Models, Engineering Graphics, or Operation Description Sheets which call out this standard number, or which refer to this standard within some other standard or specification. Original equipment and replacement parts for some vehicles sold by Chrysler Corporation or its dealers are not covered by this standard. Special Interest Vehicle Program ("Package Program") designs and modifications, done by an outside supplier, must conform to the requirements in this standard.

1.0 GENERAL

1.1 Purpose

- To define an outside designed and developed item (ODD Box Item). Refer to the Glossary at the end of this standard.
- To define and establish Chrysler Corporation and supplier responsibilities regarding parts, assemblies, components, and sub-systems furnished to Chrysler Corporation as ODD Box items.
- To recommend quote package content. Refer to the Glossary at the end of this standard.
- To assist in identifying drawings/CATIA models as supplier designed and developed.

1.2 Changes from the Previous Edition*

*** Reference to the SQA manual has been superseded by reference to QS-9000. Corporate Procedure 189 has been superseded by Corporate Process Guideline 057. ***

2.0 ORGANIZATIONS IDENTIFIED IN THIS STANDARD

The following organizational titles refer to functional entities within Chrysler Corporation.

Assembly Plant
Corporate Patent Office
Engineering (Lead Vehicle Engr. Dept)
Fastener Engineering
Manufacturing Plant
Mopar Parts Division
- Cataloging
- Service Parts Analysis
- Tool Engineering

Procurement and Supply Office
- Supplier Development (Quality)
- Supplier Management (Purchasing)

Product Development Team
Safety Programs
Supplier Quality Lab
Vehicle Assembly Plant
Vehicle Engineering Homologation Department
Vehicle/Components PF Safety Systems

3.0 CHRYSLER APPROVAL OF A SUPPLIER

The supplier must have full source approval, as described in Vehicle Engineering and Procurement and Supply Offices' procedures before purchase orders for design, development, or production are issued. Any deviations must be approved by Chrysler Corporation's Procurement and Supply Office. Design Verification of an ODD Box item is not a substitute for these procedures.

Subject to Protective Order - Thomas vs. DaimlerChrysler Corporation

4.0 DESIGN

Design and performance requirements are specified in the quote package, i.e. Performance Standard.

4.1 Intellectual Property Rights, Disclosure, and Non-Confidentiality

Intellectual property rights, disclosure, and non-confidentiality are described in Appendix A at the end of this standard.

4.2 Standard and Semi-Standard Parts

The supplier shall utilize whenever feasible Chrysler standard and semi-standard parts, purchased from approved sources. Metric fasteners shall be utilized in accordance with Chrysler's program for that vehicle family. Refer to Fastener Engineering and to the Standards Parts Book for further information.

5.0 DRAWINGS/CATIA MODELS

- Detailed drawings/**CATIA models** are required for any component parts appearing in the Chrysler Bill of Material. Supplier must submit all drawings/CATIA models, requested in the quote package, to the Product Development Team.

- It is the responsibility of Engineering to determine the level of component detail to be carried in the Engineering Bill of Material and to subsequently manage and communicate changes to the Bill of Material by the appropriate change document.

- Detail component drawings/CATIA models intended to be released:

  - must be prepared in accordance with the Chrysler CATIA Standards Reference Manual CEP-002 and the Drawing Standards Manual CEP-004. Any deviation must be approved by the responsible engineering design, releasing, and Procurement and Supply activity.

  - must detail all interfaces with associated parts and components.

  - become the property of Chrysler Corporation.

  - must show PS-7000 and the words "ODD Box" in the standards block or comment page.

  - must list all the applicable standards in the standards block or comment page in accordance with the standards entry guidelines in Engineering Operations Bulletin 93-2. The following standards shall be listed as applicable:

Safety or Regulatory	PF-Safety PF-Noise	PF-Emissions PF-Theft Prevention
	PS-9336, "Homologation Requirements"	
Part Identification	PS-4480, "Identification of Parts"	
Quality Assurance	PS-7300, "Quality Assurance Diamonds" PS-8335, "Pentagon - Critical Verification Symbol" PS-9500, "Hydrogen Embrittlement Relief"	

Chrysler Performance Standard(s) related to the part
Other Standards if not already referenced within the Performance Standard

Subject to Protective Order
Produced by Chrysler Corporation

- Engineering shall confirm that the list of standards in the standards block or comment page is complete and accurate and approve (sign-off) the drawing/CATIA model before its release.

- Engineering will identify critical:

  - safety/regulatory characteristics and direct the supplier to apply the shield symbol to the drawings/CATIA Models where appropriate.

  - non-safety/non-regulatory characteristics in conjunction with Procurement and Supply and direct the supplier to apply the diamond or pentagon symbols as appropriate.

  Refer to the Drawing Standards, Shields-Critical Characteristics, Diamonds-Critical Characteristics, and the Pentagon-Critical Verification Symbol manuals.

NOTE

Supplier Development shall approve each application of "diamonds" and "pentagons" and sign-off for PS-7300 and/or PS-8335 respectively in the standards block on the drawing or comment page on the CATIA model.

- Supplemental detail information not shown on released drawings/CATIA models shall be shown on drawings/CATIA models done on supplier forms and submitted to Engineering.

- If a supplier drawing is overlaid on a Chrysler form and is no longer to scale, the drawing must be clearly marked "Do not Scale." The Chrysler Corporation title block must always be in the lower right hand corner of the drawing.

- CAD/CAM Data exchange must conform to Chrysler's Data Exchange Policy covered in PS-9227 and in Corporate Engineering Publication CEP-001.

6.0 SUPPLIER SPECIFICATIONS (STANDARDS)

If specified in the quote package, the supplier will submit internal specifications (standards) for the ODD Box to Engineering.

7.0 USE OF APPROVED SUBSOURCES

When a referenced Engineering Standard includes an Engineering Approved Source List (EASL) as an addendum, materials, processes, and components must be purchased from suppliers listed. Engineering and Procurement and Supply Offices must review any proposed deviation. The supplier is completely responsible for the quality of the end-item regardless of whether the components are purchased from an approved source or not.

8.0 SAFETY, REGULATORY, REGULATED SUBSTANCE, RECYCLABILITY, AND EXPORT COMPLIANCE *

Engineering shall make known the safety and regulatory requirements to the supplier and the supplier shall assure such requirements are incorporated into their products.

Subject to Protective Order - Thomas vs. DaimlerChrysler Corporation

A. Engineering responsibilities include:

- reviewing the following documents:
  - *** Corporate Process Guideline ADM057 Vehicle Safety/Emissions/Noise/Theft Regulation Compliance. ***
  - Shields - Critical Characteristics Manual.
  - Applicable safety and regulatory standards.
  - Applicable Chrysler Compliance Procedures and MASSEs.
- clearly identifying to the supplier safety/regulatory requirements, including
  - any labelling or customer information needs.
  - certification requirements.
  - responsibility for compliance reports, documentation, etc.
- assuring that the Chrysler Performance Standard identifies specific safety and regulatory requirements.
- consulting with Safety Programs to verify that safety and regulatory requirements are being conveyed via the applicable source documents.
- consulting with the Vehicle Engineering Homologation Department to determine requirements for items and vehicles that require certification before export. Refer to PS-9336 and to Engineering Operations Bulletin 93-1.

B. The supplier must:

- consult with Engineering to assure the item meets safety and regulatory guidelines.
- submit reports and retain records as described in the *** Chrysler, Ford, and General Motors manual, Quality System Requirements QS - 9000. ***
- In conjunction with Engineering, identify critical safety and regulatory characteristics on the drawing/CATIA model. Refer to the Shields - Critical Characteristics Manual.
- identify safety, regulatory, or homologation concerns by including the appropriate Chrysler standard in the standards block on the drawing or model comment page of the CATIA model.
- meet Chrysler's requirements relative to regulated substances and recyclability. Products furnished to Chrysler Corporation or its subsidiaries and products and processes used by suppliers to manufacture those products must conform to the requirements in CS-9003.
- date code shielded parts, refer to PS-4480.
- mark plastic parts with the plastic Standard Marking Symbol as described in PS-4480.

All changes must meet the requirements in paragraph 11.0.

Subject to Protective Order
Thomas v. DaimlerChrysler Corporation

9.0 START OF PRODUCTION TOOLING

Upon concurrence of the Product Development Team that tooling may begin, Supplier Management will notify the supplier. The supplier is not to begin actual tooling until authorized by the Supplier Management representative either by:

- a Tooling Purchase Order
- direct communication, such as an "OK TO TOOL AUTHORIZATION NOTICE."

Refer to the "OK to Tool" Authorization Notice Operating Process booklet.

10.0 CONSTRUCTION AND CERTIFICATION OF TOOLING AIDS

Tooling aid(s) requirements should be specified in the quote package. Suppliers or their agents are to certify the accuracy of the specified tooling aid(s).

11.0 CONTROL OF CHANGES

11.1 Authorization

Changes affecting parts, designs, standards, materials, processes, subsources, or program requirements including performance, assembly, quality, timing, durability, warranty, service, compliance with governmental regulations, or customer satisfaction must be authorized by Chrysler.

A. **No change shall be made by the supplier without prior approval by Chrysler.**

B. Supplier may request a change to a part by submitting either a completed:

- "Supplier Request for Product Change" (SRPC). Refer to the Glossary.
- "Chrysler Change to Supplier 'Odd Box' Item" (formerly known as the "Black Box Form")

C. Any change to the end item made after award of business:

1. must be authorized and documented on the appropriate Chrysler change document. Refer to the Glossary.
2. requires Engineering to forward a copy of the change document along with appropriate supporting documentation to Procurement and Supply.

D. Suppliers will be required to respond promptly to a change document with cost, timing, and weight impact as requested. Chrysler Corporation will not be responsible for additional cost of supplier-initiated changes unless approved by Chrysler Engineering and Supplier Management, prior to the supplier making the change. The Product Development Team shall review the cost impact of the proposed changes. Disagreements regarding costs are to be resolved by the Supplier Management representative.

11.2 Drawings/CATIA Models

As each change occurs, the supplier must:

- submit updated drawings/CATIA models to Engineering.
- show the authorizing change document in the change block or CATIA model comment page.

Subject to Restrictive Order Thomas's Chrysler Corporation

If the change is 35 weeks prior to launch or later, the supplier must also notify Service Parts Analysis. Changes to released drawings must follow Chrysler drawing practices.

NOTE

Changes to supplier drawings/CATIA models or supplier specifications (standards) must follow either Chrysler or ANSI practices.

11.3 Supplier Specifications (Standards)

If an authorized change affects the supplier's internal specifications (standards), the supplier must submit copies of the revised document to Engineering; and if the change is 35 weeks prior to launch or later, the supplier must also notify Service Parts Analysis.

11.4 Changes of Second Tier Sources

The primary supplier, using the form "Chrysler Change to Supplier 'Odd Box' Item", shall notify Engineering, Procurement and Supply, and Service Parts Analysis when a change of subsources is being contemplated, whether or not the source is included on an Engineering Approved Source List.

11.5 Safety, Regulatory, Regulated Substances, Recyclability, and Export Compliance

Any running change to the design after compliance validation, must be evaluated for compliance implications. If compliance with a government regulation is affected, re-certification will be required:

- for safety and/or regulatory concerns, Engineering must notify Safety Programs. In addition, a supplemental compliance report may be required.
- for export approval, Engineering must notify the Vehicle Engineering Homologation Department to arrange for export re-certification; refer to PS-9336.
- for approval of restricted or regulated substances, the supplier must submit a revised "Supplier Regulated Substance and Recyclability Certification Report;" refer to CS-9003.
- to report changes in recyclability, the supplier must submit a revised "Supplier Regulated Substance and Recyclability Certification Report;" refer to CS-9003.

11.6 Production Part Approval

Refer to paragraph 13.3.

12.0 RECORD RETENTION *

Engineering shall maintain drawings/CATIA models and supplier specifications including all changes per the requirements in Engineering Operations Bulletins 92-1, "Record Retention Requirements" and in *** "Corporate Procedure ADM 062, "Records Management." ***

13.0 QUALITY ASSURANCE

13.1 Design Verification

As depicted in the Chrysler Performance Standard or quote package, suppliers shall furnish sample pre-production parts along with a completed "Pre-production Sample Report" to Engineering.

Subject to protective Order Thomas v. DaimlerChrysler Corporation

13.2 Production Validation

The supplier shall conduct Production Validation as specified in the applicable Performance Standard.

NOTES

Design Verification and Production Validation must be completed prior to the Process Signoff and the Production Part Approval Process Warrant submission. Successful completion of Design Verification and Production Validation does not fulfill **production** quality control requirements.

Any Changes (including changes to subsources, materials, processes, etc.) may require repeating Design Verification and/or Production Validation at the discretion of Engineering or Supplier Development.

13.3 Production Part Approval Process (PPAP)

Production Part Approval Process describes production part review and approval prior to the first quantity shipment to a Chrysler plant. The Production Part Approval Process determines if all the engineering requirements are properly understood and if the process has the potential to produce parts meeting requirements. PPAP must be successfully completed before a supplier ships the first quantity shipment to a Chrysler facility. Refer to the Glossary for further information.

Supplier submission requirements to the respective Chrysler facilities for PPAP are shown below:

- Vehicle Assembly Plants

  Self-certified suppliers of end-items to Chrysler vehicle assembly plants must submit a Warrant to Chrysler's Supplier Quality LAB. Suppliers who are not classified as self-certified must submit their parts to an independent laboratory approved by Chrysler for tests and dimensional inspections, prior to submitting their Warrant to the Supplier Quality Lab.

- Chrysler Manufacturing Plants (Powertrain, Acustar, etc)

  Self-certified suppliers of end-items to Chrysler plants other than assembly plants must submit a Warrant to the respective Chrysler manufacturing plant. Suppliers who are not classified as self-certified must submit along with the Warrant, sample parts and test and dimension inspection results to the Chrysler manufacturing plant.

When materials, subsources, processes, specifications, etc. for parts are changed, the supplier must repeat the production part approval process unless Engineering has waived this requirement for this specific change. Refer to AIAG's Production Part Approval Process manual and to paragraph 11.0.

For further instructions contact the responsible Supplier Management representative.

13.4 Continuing Conformance Requirements

Upon satisfactory completion of the requirements in paragraphs 13.1 through 13.3, the supplier must conduct Continuing Conformance Inspection/Tests as defined in the applicable Performance Standard. Shipments of parts for production and for Mopar Parts Division must conform to all specified requirements.

Subject to protective agreement with DaimlerChrysler Corporation

13.5 Supplier's Quality System Requirements

Suppliers must have a quality system plan to assure that only defect free parts are shipped to Chrysler. Suppliers must adhere to the current Chrysler quality system requirements.

14.0 WARRANTY RESPONSIBILITIES

14.1 Production Items and Systems

Warranty cost reduction/elimination is the joint responsibility of Chrysler Corporation and the supplier. Chrysler Corporation has overall system responsibility to ensure that the system operation does not cause a supplier component failure. The supplier has total responsibility for the quality and reliability of the components supplied and will be held accountable for any system failures attributable to failure of the supplier's components. Such responsibility will include:

- reimbursement of Chrysler's total actual costs in extending a warranty on the supplied component, including but not limited to Chrysler's total reimbursement to its dealers for parts and labor.
- defending and indemnifying Chrysler Corporation against all claims, liabilities, losses, consequential and other damages, and settlement expenses for injury or death of any person and damage or loss of any property allegedly or actually resulting from failure of the supplier's components.

14.2 Service Items

Supplier has responsibility for Service Part Warranty. This warranty will cover failures of supplied components sold by Chrysler dealers to customers outside of the new vehicle warranty.

15.0 SERVICEABILITY AND SERVICE PARTS REQUIREMENTS

Service information is the joint responsibility of Chrysler Corporation and the supplier. Decisions regarding how to provide service parts are the responsibility of the Supplier, Engineering, and Service Parts Analysis.

The supplier in conjunction with Engineering must design production parts, kits, and service assemblies that:

- incorporate serviceability design objectives.
- meet MOPAR parts supply needs and design objectives.
- require the minimum of special tools.
- consider low volume service production requirements.

Suppliers must provide:

- serviceability information.
- Mopar Parts, including Cataloging, Service Parts Analysis, and Tool Engineering with drawings/CATIA models, material and process specifications, graphic illustrations, or actual sample part assemblies.
- Service Parts (MOPAR) Purchasing and Service Parts Analysis approximately 35 weeks before volume production with a priced bill of material, in a structured format indicating recommended serviceable parts. The bill of material should also identify second and third tier sources.

Subject to Protective Order in U.S. Daimler/Chrysler Corporation

- assurance (guarantee) that service assemblies and components are available for the entire service retention period.

Changes affecting service parts shall be handled according to the instructions in paragraph 11.0, as appropriate.

16.0 CONTROL

This standard was issued by Chrysler's Engineering Standards and Information Services Department. All proposed changes should be directed to them for approval, prior to implementation.

This standard was revised through the efforts of a task force, consisting of representatives from Supplier Development, Supplier Management, Engineering Standards and Information Services, Small Car Engineering, Large Car Engineering, and MOPAR Parts Division.

#####

Subject to Protective Order - Thomas vs. DaimlerChrysler Corporation

APPENDIX A: INTELLECTUAL PROPERTY RIGHTS, DISCLOSURE, AND NON-CONFIDENTIALITY

INTELLECTUAL PROPERTY RIGHTS

Ownership of intellectual property, such as trade secrets, patents, trade marks, and copyrights, is addressed in the purchase order through rider clauses 98, 98A, and/or 99. **Copies of these clauses are available from Supplier Management.**

DISCLOSURE

Supplier at the time of preliminary discussions shall provide Engineering and Supplier Management total disclosure of supplier's patents and patent applications relating to the item to be provided by the supplier.

NON-CONFIDENTIALITY

It is Chrysler's policy not to enter into formal confidentiality agreements with its suppliers or potential suppliers.

Information, such as material, literature, specifications, blue-prints, CATIA models, samples, or data relating to a particular ODD Box item provided by a supplier shall not bear written "Restricted," "Confidential," or "Proprietary" notations or markings pertaining to confidential requirements or other restrictions limiting usage of the data itself or parts or processes to which it relates. Suppliers shall be asked to delete and initial any such notations, markings, or restrictions. In any event, any such notations, markings, or restrictions shall not prevent Chrysler personnel from using such information or from disclosing such information to others who have a need to know such information.

To foster the exchange of proprietary information or confidential information, Chrysler and the supplier shall rely on each other's ethics to handle each other's proprietary or confidential information in the same manner as each handles its own proprietary or confidential information. Further, the exchange of such information is with the understanding that disclosure of such information from one party to the other neither constitutes a public divulgence nor creates a bar to filing patent applications anywhere in the world.

Order from IHS Daimler Chrysler Corporation
Subject to Protective

APPENDIX B: GLOSSARY *

AIAG. AIAG (Automotive Industry Action Group) is a trade association formed to increase productivity and competitiveness through a cooperative effort between manufacturers and suppliers.

CATIA. CATIA is the acronym for Computer Aided Three-Dimensional Interactive Application software which is used to create computer aided design models.

Change Document. Within this document, the term "change document" refers to the appropriate change instrument: Product Change Notice (PCN), Advance Product Change Notice (APCN), Change Notice (CN), Material Change Notice (MCN), Chrysler Change to an ODD Box form, SRPC, etc.

AMCN. AMCN stands for an Advance (pre-release) Material Change Notice.

APCN. An APCN (Advance Product Change Notice) communicates and coordinates part design and change information prior to release of the production drawing.

CN. A CN (Change Notice) is a streamlined version of a Product Change Notice (PCN); it automatically includes an MCN.

MCN. After release, an MCN (Material Change Notice) is the supplier's official authorization from Chrysler to implement a change in response to a product change notice (PCN). It associates costs with a PCN. (A CN encompasses an MCN and is not a separate process.)

(ODD Box form) Chrysler Change to a Supplier 'Odd Box' Item. Formerly known as a "Black Box Form" is used to request and approve changes to a drawing/CATIA model, Engineering Standard, process, material, or subsource. This form (NPM # 84-806-1609), included in the General Terms and Conditions, can be obtained from the responsible Supplier Management representative. If the change affects appearance, performance, quality, or costs, a change document may be required.

PCN. A PCN (Product Change Notice) documents, describes, and communicates a product change.

(SRPC) Supplier Request for Product Change. An SRPC (NPM # 84-806-1849) is a Chrysler form used by the supplier to obtain approval for **no-cost changes which do not affect performance, assembly, quality, durability, warranty, or customer satisfaction.** SRPCs are used for changes that will be visible on a drawing/CATIA Model. Refer to Engineering Operations Bulletin 85-5.

Design Aids. Design aids are used in developing and proving out fit, finish, and clearance among mating parts and in determining conformance to assembly, serviceability, installation, and appearance specifications.

Engineering. Within the context of this standard, the term "Engineering" denotes the **lead** Chrysler Vehicle Engineering design department.

Engineering Approved Source List (EASL). An Engineering Approved Source List is a list of suppliers approved by Engineering and the Procurement and Supply Office. An EASL is included as an addendum to an Engineering Standard. Refer to the Engineering Standards Writers' Guide.

Chrysler Corporation
Daimler
Subject to Protective

ISIR/ISLR (Initial Sample Inspection Report/Initial Sample Laboratory Report). This term has been superseded by the "production part approval process." Refer to paragraph 13.3.

Outside Design and Development Item ("ODD Box"). A part, assembly, component, or vehicle sub-system designed, developed, tooled, and produced by a supplier or jointly by a supplier and Chrysler. An ODD Box may fit any of the following categories:

1. A proprietary item to which the supplier retains ownership of the intellectual property rights.

2. An adaption of the paragraph above. Modification may be made to meet Chrysler Corporation performance, identification, or packaging requirements, but the supplier retains all the intellectual property rights to the item.

3. An item designed and developed from Chrysler Corporation concepts to meet a specific need. Supplier designs and develops the item, but Chrysler Corporation owns all the intellectual property rights to the item.

4. A combination of the above items.

Pre-Production Sample Report.* Part suppliers are required to submit a Pre-production Sample Report on pre-production parts during the program/pilot phases, prior to Production Part Approval Process Warrant submission.

Production Parts and Production Samples. Production Parts are manufactured at the production site using production tooling, gaging, processes, materials, operators, environment, and process settings, e.g. production feeds/speeds/cycle times/pressures/temperatures. Production Samples are production parts taken from a significant production run. Refer to AIAG's Production Part Approval Process manual.

Production Part Approval Process (PPAP). Production Part Approval Process is a process adopted by Chrysler, Ford, and General Motors to simplify and standardize customer (Chrysler) approval of initial samples; at Chrysler it replaces ISIR/ISLR sample submission requirements. Refer to AIAG's Production Part Approval Process Manual.

Quote Package. A collection of information which defines and explains Chrysler Corporation and supplier responsibilities and requirements. It includes information to enable the suppliers to fulfill their responsibilities and requirements. The following list depicts typical topics for a quote package and is not intended to be all inclusive:

certification requirements
- production part approval process
- Supplier Regulated Substance and Recyclability Certification Report
- tooling aids

CATIA design and transmission capabilities, in-house
documentation requirements
- drawings or CATIA models meeting Chrysler Corporation Engineering Standards
- pictorials or graphics
- supplier prints
- supplier specifications (standards)
- interface drawings/CATIA models

Design Verification Plan and Report (DVP & R)
FMEAs-design and process (SAE J1739, "Potential Failure Mode and Effects Analysis ....")
management approval, i.e., executive engineer's letter

Subject to Restrictions
Order from S. Daimler-Chrysler Corporation

milestone chart (time line)
- advanced quality plan
- applicable master timing schedule dates
- process sign-off date (process sheets, inspection instructions, gages, initial samples, and packaging)
- priority parts quality review (PPQR) dates

part name, number, and description - Chrysler (end-item)
Process Standard, PS-7000
Performance Standard for the item (including expected quality/reliability)
prototype requirements
purchase order rider clauses 98, 98A, and 99 as appropriate
recyclability requirements
sales code(s)
sample requirements (design verification, production validation, production part approval process)
standards, other applicable (Material, Process, Characteristic, etc.)
subsources (subsuppliers) if deemed necessary
serviceability and service parts requirements, refer to paragraph 15.0
target investment
target piece price
target weight
tooling aids
tooling capacity
volumes planned for each production year

Questions concerning the content of the quote package should be directed to the Supplier Management representative.

Released Drawings/CATIA models. Drawings approved by Chrysler design, Engineering, engineering management, and engineering release activities for production or special interest vehicle programs.

Special Interest Vehicle Program ("Package Program"). A program to provide special limited-volume sales models or options by modifying production vehicles prior to shipment to dealers.

Standard Parts. Parts for which specifications are published in the Standard Parts book.

Semi-Standard Parts. Parts which differ enough from Standard Parts to require their own separate drawing/CATIA model.

Supplier. The term supplier refers to both Corporate and outside sources.

Subject to Protective Order - Chrysler Corporation vs. Daimler

APPENDIX C. REFERENCES*

The documents, standards, and forms referenced within this standard are listed below and are available from the organizations depicted below:

SOURCES OF REFERENCES FOR CHRYSLER TEAM MEMBERS

*** Corporate Process Guidelines (CPGs) (Available on HPCICS2 on Chrysler's Information Systems)

ADM057 Vehicle Safety/Emissions/Noise/Theft Regulation Compliance
ADM062 Records Management ***

Engineering Standards and Information Services Department

Compliance Procedures [1]
Diamonds-Critical Characteristics and the Pentagon-Critical Verification Symbol manuals
Engineering Operations Bulletins:[1]
85-5 "Supplier Request for Product Change (SRPC) Procedure"
92-1 "Record Retention Requirements"
93-1 "Homologation Requirements"
93-2 "Entering Engineering Standard Numbers on Drawings and EBOM"
Engineering Standards, Standards Parts book
Engineering Standards Writers' Guide
Engineering Standards (MS, PS, PF, CS, and AS) [1]
PS-4480 "Identification of Parts"
PS-7300 Quality Assurance Diamonds
PS-8335 Pentagon-Critical Verification Symbol
CS-9003 "Environmental, Health, and Occupational Safety ....
PS-9227 "CAD/CAM Data Exchange Policy"
PS-9336 "Homologation Requirements"
PS-9500 "Hydrogen Embrittlement Relief"
Chrysler safety standards, e.g. PF-SAFETY [1]
Motor Vehicle Safety Standards [1]
CEP-001 CAD/CAM Data Exchange Policy [1]
CEP-002 Catia Standards Reference Manual [1]
CEP-004 Drawing Standards Manual[1]
Shields Critical Characteristics manual

Product Strategy and Regulatory Affairs Office, Vehicle Compliance and Safety Affairs Dept.
Vehicle Components PF Safety Systems

Applicable MASSEs (Manufacturing Assurance Standard Safety/Emissions)

Safety Programs

Compliance Procedures, Reports, & Supplemental Compliance Reports
Motor Vehicle Safety Standards and regulations

Supplier Management Organization of Procurement and Supply

Procurement and Supply Procedures ....
Purchase Order Rider Clauses 98, 98A, and 99

Subject to Protective Agreements. ©Chrysler Corporation

Vehicle Engineering Platforms Program Management Team

"OK to Tool" Authorization Notice Operating Process

SOURCES OF REFERENCES FOR SUPPLIERS

Automotive Industry Action Group (AIAG)*

***Chrysler, Ford, and General Motors manual, Quality System Requirements QS - 9000 ***
Production Part Approval Process

Customer Satisfaction & Vehicle Quality, Chrysler Quality Institute

Diamonds-Critical Characteristics and the Pentagon-Critical Verification Symbol manuals
Shields Critical Characteristics manual

Engineering Standards and Information Services

CEP-001 CAD/CAM Data Exchange Policy
CEP-002 Catia Standards Reference Manual

*** Integrated Systems Development, Holland Michigan 49422 (Phone 616-396-0880) ***

Characteristic, Material, Performance, and Process Standards
CEP-004 Drawing Standards Manual
Engineering Standards, Standards Parts book

Society of Automotive Engineers (SAE)

J1739, "Potential Failure Mode and Effects Analysis...."

Supplier Management Organization of Procurement and Supply

Chrysler Change to Supplier "Odd Box" Item (NPM # 84-806-1609)
Purchase Order Rider Clauses 98, 98A, and 99
Supplier Request for Product Change - SRPC (NPM # 84-806-1849)

---

1. Available on-line on the Automated Document Retrieval and Engineering Standards System (ADRESS©).

Subject to Protective Order Thomas v. DaimlerChrysler Corporation

End of Strickland Document

Affidavit Attachment 2

LAW OFFICES

CHAMBERS STEINER

A Professional Corporation

1490 FIRST NATIONAL BUILDING
DETROIT, MICHIGAN 48226-3592

Telephone (313) 961-0130
Fax (313) 961-8178

KALAMAZOO OFFICE
7040 STADIUM DRIVE
KALAMAZOO, MICHIGAN 49009
Telephone (616) 375-4300
Fax (616) 375-4077

ROSEVILLE OFFICE
25235 GRATIOT AVE.
ROSEVILLE, MICHIGAN 48066
(810) 773-3455

JOHN F. CHAMBERS
SANFORD L. STEINER
MICHAEL S. MAZUR
ALEXANDER T. ORNSTEIN
DARRELL M. AMLIN
COURTNEY E. MORGAN
JEFFREY T. MEYERS
ANGELA J. NICITA
LOUIS G. COREY
JOHN I. KITTEL
RICHARD J. CAROLAN
MICHELLE J. HARRISON
PATRICIA A. MURRAY
CHRISTOPHER S. HARTMAN
FRANKLIN J. CHAMBERS
MARTIN R. STURM
KEVIN P. BURCH
DOUGLAS A. MERROW
LISA A. KLAEREN
FRANK B. MELCHIORE
DANIEL C. BROWN

July 14, 1995

Thomas G. Kienbaum, Esq.
500 Woodward Ave., Suite 4000
Detroit, Michigan 48226-3406

Re: Chrysler vs. Sheridan

Dear Mr. Kienbaum:

I am in receipt of your most recent correspondence regarding the magistrate's recommendation and our providing of information to you regarding office materials. I do not know how you could have reasonably concluded from the correspondence that was forwarded to you that we are of the opinion that there is no basis to conclude that evidence may have been tampered with in this case. Indeed, the anxiety exhibited by the fact that you immediately faxed your reply to me suggests that in reality you hold the opposite opinion. Due to the necessity of my attendance at federal court in Wichita, Kansas this week, I did not believe that I was going to be able to comply with the July 14, 1995 deadline. Now, it appears that we are in a position to comply.

The information provided hereunder is based upon our limited and restricted ability to review materials which were allegedly seized from Mr. Sheridan's work space. That review is neither complete, nor did it have as its purpose the ferreting out of all details of evidence tampering which may exist. Lack of inclusion of any specific item in this list shall not be taken as an admission of the authenticity of such a document or other tangible item.

The document submitted by the plaintiff entitled, "Confidential Inventory of Material from Paul V. Sheridan's Cubicle at the Chrysler Technology Center", dated March 16, 1995, has numerous general inconsistencies and inaccuracies based on defendant's knowledge and cursory examination of the actual inventory:

1. This "inventory" fails to list and does not contain the following files:

- Liftgate Latch - General
- Liftgate Latch - Competitive
- Safety Leadership Team - Meeting Minutes
- Safety Leadership Team - Preliminary
- Liftgate Latch - Safety Office
- H. G. Cook Study
- FMVSS 206 - General
- Seat Back Strength - General
- Seat Back Strength - FMVSS 207 Specifications
- Offset Impact - General
- Rear Crash Survivability - General
- FMVSS - 301
- Side Crashworthiness Issues
- FMVSS - 214
- Bumper Issues - General
- NS-Body Bumper
- Taillamp Studies - Zarowitz
- Amber Taillamp - NS-Body
- Rear Seat Headrest - General and Zarowitz
- Back-up Light - General

2. The "inventory" lists files but inaccurately portrays their original/current contents:

- Box #1 - File "NS Liftgate System". This file contained subfiles such as "Customer Injury", "Saginaw", et al. Also contains photographs that were originally in the "Liftgate Latch - General" file which is missing per #1 above. (see page 4 of inventory).

- Box #1 - File "NHTSA News" contains only half its original contents (see page 4 of inventory).
- Box #1 - File on "Muth Technologies" not listed; subfile "RSZ" not listed (see page 4).

- Entry on page 8 of inventory indicates that a file contained "correspondence for Dr. Detroit Motorsports". No correspondence was ever sent to Mr. Sheridan's Chrysler office for Dr. Detroit Motorsports, nor was any on file at that location.

3. The "inventory" identifies files and file locations by box number but the location identified was found to be inaccurate.

4. The "inventory" fails to explain/list file materials that were found in the actual inventory by defendant:

- Documents relating to FMVSS-208 dated December 21 were found in Box #1 in file "NS-Restraints". This file is not listed on inventory. (see page 4)

5. This "inventory" fails to accurately explain/list documents allegedly found in the cubicle, as described during the deposition of plaintiff's investigators.

6. The "inventory" fails to list files that were found in the actual inventory.

7. The "inventory fails to list/identify location of specific video tapes:

- Environmentally Safe Oil Changes
- Formula SAE
- IIHS Bumper Tests
- Etc.

8. The "inventory" fails to accurately list contents of computer disks and computer hard drive.

This response is not complete. Further examinations of inventory is still pending. Preliminary examinations cover documents listed through page 18, but not Box #7. Document listings from page 18 through 39 have not yet been examined.

Sincerely,

Courtney E. Morgan, Jr.

CEM/mn
cc: George Googasian, Esq.
(Via Facsimile)

Affidavit Attachment 3

CHRYSLER CORPORATION

William J. O'Brien
Vice President
General Counsel and Secretary

February 17, 1995

Kenneth N. Weinstein, Esq.
National Highway Traffic
Safety Administration
400 Seventh Street, S.W.
Washington, DC 20590

Chrysler Corporation v. Paul Sheridan

Dear Ken:

As we discussed this afternoon, I confirm that Chrysler has no objection to NHTSA receiving information relevant to your Engineering Analysis 94-005 concerning rear latches on the liftgates of Model Year 1984-1994 Chrysler minivans from Mr. Paul Sheridan or anyone else.

The litigation against Mr. Sheridan was commenced because of our concerns about his unauthorized disclosure of confidential and proprietary Chrysler business information to unrelated third parties, some of which information eventually appeared in the public press.

As you know, we have been cooperating with NHTSA on all aspects of this Engineering Analysis, and we will continue to do so. Mr. Sheridan's responsibilities at Chrysler did not involve the minivans which are the subject of this Engineering Analysis, and in seeking the Restraining Order entered against Mr. Sheridan it was not our intent to preclude NHTSA from receiving any information concerning those minivans.

We will inform the Court at the hearing on Wednesday that we have no objection to NHTSA receiving any documents or information that Mr. Sheridan may have that are relevant to this Engineering Analysis. We would, of course, like to have copies of any such documents and information that Mr. Sheridan may eventually provide to you.

If there is anything we can do to facilitate this matter for you, please give Lew Goldfarb or me a call.

Thank you.

Sincerely,

Bill O'Brien

cc: L. H. Goldfarb, Esq.
G. J. Ridella, Esq.

Chrysler Corporation
12000 Chrysler Drive
Highland Park, MI 48288-1919
313 956 5630

EXHIBIT 3
MLT 3/14/03

ATTACHMENT X *

EXPERT WITNESS REPORT - 2 January 2012 REVISION

Kline v. Loman Auto Group, Victoria Morgan-Alcala, et al.

Page Range 2

Pages 820 – 821

* Also please see enclosed file folder:

“Attachment X: 16Nov2011 Orlando ZJ Fire Death Inspection”

and

http://www.youtube.com/watch?v=83lnbTVVGjk&feature=related

and

http://www.youtube.com/watch?v=GDW3t2g2DAc&feature=related

22357 Columbia Street
Dearborn, MI 48124-3431
313-277-5095
pvsheridan@wowway.com

15 December 2011 VIA FEDEX AIRBILL # 8696-6728-3790

Ms. Angel M. DeFilippo, Esq.
Grieco Oates & DeFilippo, LLC
414 Eagle Rock Avenue
West Orange, NJ 07052
973-243-2099

Subject 1: Expert Report / Referenced Litigation File Update
Subject 2: Jeep Grand Cherokee - Orlando, Florida Fire Death accident of 16 November 2011
Reference: Estate of Susan Morris Kline

Dear Ms. DeFilippo:

Subsequent to my expert report submission of 10 August 2011, I expended effort to remain informed of any developments that are directly relevant to the referenced litigation.

On 1Dec2011 I inspected a 1997 Jeep Grand Cherokee located/previously operated in Orlando, Florida. This ZJ-Body vehicle is similar to that driven by Mrs. Susan Kline on the morning of 24Feb2007. On 16Nov2011 the subject vehicle was involved in a foreseeable rear-end collision. And similar to the Kline death accident, both occupants survived the crash, but then suffered horrific burn injury (driver) and horrific death (front-seat passenger).

Enclosed are the file materials that I have developed/acquired thus far that document this Orlando Jeep Grand Cherokee fire death/injury accident:

1. Letter of 5 December 2011 to NHTSA Administrator Mr. David Strickland,
2. Photographs that I took at the tow yard where the Subject 2 vehicle is stored,
3. Preliminary Florida Highway Patrol accident report,
4. Video stills of local Orlando television news reports of 16Nov2011 accident,
5. Video/YouTube files of (1) news coverage and (2) accident witness filming of scene.

Items 1 thru 5 can be found on the enclosed cd, and item 5 can also be viewed in the enclosed DVD. These materials are preliminary/ongoing. Please amend Subject 1 to include these, and any additional materials that I acquire/develop prior to the litigation discovery deadline of the reference.

Respectfully,

Paul V. Sheridan

Enclosures

Courtesy Copy List (via email)

N, Hannermann
C. Nash
D. Philips
R. Sacco, Jr.

ATTACHMENT Y *

EXPERT WITNESS REPORT - 2 January 2012 REVISION

Kline v. Loman Auto Group, Victoria Morgan-Alcala, et al.

Page Range 2

Pages 823 - 824

* Also please see enclosed file folder:

“Attachment Y: 1997 Jeep ZJ BTSI Recall – ABC News Primetime”

and please see:

http://www.youtube.com/watch?v=S7BhONk4Bj8

22357 Columbia Street
Dearborn, MI 48124-3431
313-277-5095
pvsheridan@wowway.com

19 December 2011

Ms. Angel M. DeFilippo, Esq.
Grieco Oates & DeFilippo, LLC
414 Eagle Rock Avenue
West Orange, NJ 07052
973-243-2099

Subject 1: Expert Report / Referenced Litigation File Update
Subject 2: Jeep Grand Cherokee Safety Defect "Customer Satisfaction Notification #733"
Reference: Estate of Susan Morris Kline

Dear Ms. DeFilippo:

Attached are materials regarding the 1997 recall of Jeep Grand Cherokee vehicles for retrofitting with a fundamental safety device (brake-shift interlock, BTSI). These materials address Subject 2 above:

1: Letter of December 1997 to Jeep Vehicle Owners,
2: Letter of December 1997 to Jeep Dealership Principals,
3: CSN #733 Service Installation Instructions of December 1997 (24 pages),
4: Dealer Relations email of 04/29/97 to Jeep Dealership Principals (6 pages),
5: Automotive News article of May 5, 1997: *"JEEP WILL MODIFY SHIFTER."*
6: Associate Press article of April 29, 1997: *"JEEP OFFERS FREE BRAKE DEVICE,"*
7: Detroit News article of April 30. 1997: *"CHRYSLER TO OFFER SAFETY DEVICE TO JEEP OWNERS,"*
8: ABC News Primetime television report of May 7, 1997: *"UNSCHEDULED TAKEOFF!"*

Consistent with my letter of 15Devember2011, which had the same Subject 1 and Reference, please amend Subject 1 to include these additional file materials.

Respectfully,

Paul V. Sheridan

Paul V. Sheridan

Enclosures

Courtesy Copy List (via email)

N, Hannermann
C. Nash
D. Philips
R. Sacco, Jr.

ATTACHMENT Z

EXPERT WITNESS REPORT - 2 January 2012 REVISION

Kline v. Loman Auto Group, Victoria Morgan-Alcala, et al.

Page Range 13

Pages 826 - 838

New study shows more deaths in GM pickups

12/2/92

By Bryan Gruley
NEWS WASHINGTON BUREAU

WASHINGTON — A new General Motors Corp. analysis shows that GM's 1973-87 fullsize pickup trucks have a higher death rate in crashes than Ford and Chrysler models.

The new analysis, produced at the request of federal regulators, appears to contradict one of GM's key defenses of its pickups, which critics say have killed at least 115 people in crash-related fires.

Clarence Ditlow of the Center for Auto Safety, a Washington consumer group, accused GM of "rigging the data" to make its trucks look safer until regulators called a halt.

GM spokesman Ed Lechtzin said the company was merely cooperating with the the government's preliminary investigation of the trucks.

The National Highway Traffic Safety Administration (NHTSA) is considering whether to recall the vehicles, an estimated 5 million of which remain on the road. At issue is whether their sidesaddle fuel tanks are vulnerable to puncture in a crash.

GM repeatedly has said the trucks have a lower overall death rate in crashes than comparable Ford and Chrysler models.

But a revised study by a GM consultant shows the GM fullsize models with a fatality rate higher than that of both competitors.

Despite the new findings, GM spokesman Lechtzin said the fatality rates are "still comparable."

But, he said, "We can't make the specific statement we made earlier."

In a Nov. 24 letter, GM General Counsel Harry J. Pearce apologized to NHTSA Administrator Marion Blakey for providing data which "obfuscated" the automaker's belief that the trucks are safe.

"We are redoubling our vigilance to prevent such an occurrence in the future," Pearce wrote, adding, "there was absolutely no intention to mislead anyone."

NHTSA must decide by Dec. 14 whether to launch a full-scale investigation of the trucks. The Center for Auto Safety has asked the agency to order a recall.

"It's obvious that GM is now rigging the data to justify having

Please see Pickups, 2E

Pickups: New numbers differ

From page 1E

killed so many Americans in fire crashes," center director Ditlow said.

GM's previous claim that its trucks had a lower fatality rate than Ford and Chrysler models was based on a comparison of GM's fullsize pickups to fullsize and smaller trucks made by its rivals.

At NHTSA's prompting, GM asked its consultant, Failure Analysis Associates Inc. of Menlo Park, Calif., to redo the study minus the smaller Ford and Chrysler models.

The result: GM trucks had 1.51 deaths per 10,000 crashes of all types, Ford 1.45 and Chrysler 1.16.

NHTSA investigators are struggling to determine whether the differences between those numbers matter.

GM trucks fared better in other comparisons. For example, in side-impact crashes, Ford had a higher fatality rate than GM.

The rate of fatal fires in GM trucks was higher than either Ford or Chrysler.

Lechtzin said Pearce wrote NHTSA "so that the small discrepancy between those (new) numbers and our original numbers doesn't overshadow our good, sound case that the vehicles are safe."

A NHTSA official who spoke on the condition of anonymity said GM's revision appeared to be an honest effort to help the agency.

Agency officials Tuesday briefed Sen. Richard Bryan, D-Nev., on the truck matter. Bryan, who chairs a subcommittee with jurisdiction over the agency, is said to favor a full-scale investigation of the trucks.

GENERAL MOTORS CORPORATION
POST OFFICE BOX 33122
DETROIT, MICHIGAN 48232

HARRY J. PEARCE
EXECUTIVE VICE PRESIDENT
AND GENERAL COUNSEL

NEW CENTER ONE BUILDING
3031 WEST GRAND BOULEVARD
TELEPHONE 313/974-1404
FACSIMILE 313/974-0200

November 24, 1992

The Honorable Marion C. Blakey
Administrator
National Highway Traffic Safety
Administration
400 Seventh Street, S.W.
Washington, DC 20590

Dear Administrator Blakey:

General Motors is committed to working with the agency in a forthright and constructive fashion to resolve the questions that have arisen about our 1973-1987 C/K pickup trucks. As you know, it is our strongly-held belief that we have sound legal and factual arguments against the suggestion that these vehicles contain a safety-related defect. Given that, I was quite dismayed to learn yesterday that some aspects of the statistical analysis prepared by Failure Analysis Associates at our request and presented to the agency last month -- an analysis obviously submitted to the agency in an attempt to clarify our position -- may unfortunately have obfuscated it.

We are redoubling our vigilance to prevent such an occurrence in the future. You have my assurance that there was absolutely no intention to mislead anyone, and we trust that the additional information we are submitting to the agency will put this matter behind us.

Very truly yours,

Harry Pearce

OP92-016-27

Failure Analysis Associates

Failure Analysis Associates, Inc.
Engineering and Scientific Services
149 Commonwealth Drive, P.O. Box 3015
Menlo Park, California 94025
(415) 688-7100 Telex 704216 Fax (415) 326-2996

Dr. Roger L. McCarthy, P.E.
Chairman and President

VIA FAX

24 November 1992

Mr. William Boehly, Associate Administrator for Enforcement
U.S. Department of Transportation
The National Highway Traffic Safety Administration
400 Seventh Street, SW, Room 5321
Washington, DC 20590

Re: Failure Analysis Associates, Inc. report concerning GM C/K series pickups.

Dear Bill:

This letter is a written summary of the information provided by Mr. Robert Lange of Failure Analysis Associates, Inc. (FaAA) concerning the various categories of accident data analyzed in connection with our report concerning GM C/K series trucks. I also wish to reiterate the offer made by Mr. Lange that we would be most interested and willing to replicate the various analyses that the agency has performed on available accident data, using the agency selected definitions and categories, to insure that there is agreement on what the available accident data indicates. I am certain that all involved would prefer to move beyond any questions related to data, and instead discuss relevance and interpretation.

It is my understanding that there may have existed some confusion as to whether the analysis we performed concerning other manufacturers included only "full size" pickups or "all" pickups. We regret any confusion that may have existed. As set forth in our two page discussion of "Comparison Vehicle Selection," our report compares GM C/K pickup post collision fire rate "performance to the performance of all [emphasis added] other light-duty vehicles on-the-road and subject to the same collision environment as are the GM C/K pickup trucks." [pg. 20] Further, on the same page, we explicitly define the comparison sets to accomplish this goal by stating:

> "In summary, post collision fire rates of GM C/K pickups were compared to the following vehicle sets:
>
> - o Chrysler Pickups;
> - o Ford Pickups;
> - o Nissan Pickups;

Failure Analysis Associates is a registered trademark and the background with crack is a trademark of The Failure Group, Inc.
Failure Analysis Associates, Inc. is a member of The Failure Group, Inc., which has offices and subsidiaries in: UNITED STATES EUROPE CANADA

DP92-C16-25

- o Toyota Pickups;
- o Average Passenger Car;
- o 95 percentile Passenger Car." [pg. 20]

I am informed by Mr. Lange that you inquired in the recent meeting if we had refined the analysis done in the report down to a comparison of "full size" GM pickups to "full size" Ford Pickups. We have developed data on selected "full size" pickup models subsequent to our initial report, and all this information will be provided this week. This analysis was not performed for the original report for reasons stated in Section 3.3 of our report:

> "Fundamentally, occupants of pickup trucks are entitled to the same level of overall safety (that is, the same level of relative rarity of collision-fire events) as are occupants of other light-duty motor vehicles: passenger cars, vans, utility vehicles, and special purpose vehicles. That is, a determination of an acceptable collision-fire rate must apply uniformly across all classes of vehicles likely to be used as passenger conveyances. NHTSA implicitly adopted this philosophy in defining the appropriate motor vehicle fuel system integrity requirement for various classes of vehicles when it promulgated FMVSS 301 to apply equally to passenger cars, light trucks, and utility vehicles." [pg. 19]

Apart from the fundamental considerations set forth above, as you are aware, there simply is not a uniformly agreed upon definition of a "full size" pickup, just as there is no uniform definition of a "full size" car. The National Highway Traffic Safety Administration has obtained directly from Ford and Chrysler definitions and/or a list of "full size" models. FaAA does not have this information. Therefore, any set of "full size" vehicles FaAA selects runs the risk of being inconsistent with the manufacturer's definitions, and potentially opens FaAA to criticism if we were to inadvertently omit a group of "full size" trucks from analysis of another manufacturer's production that significantly affected the results one way or the other. Subsequent to our report we have performed the previously mentioned analysis of selected "full size" competitor models, which we hope will be helpful.

While a comparison of fire rates amongst "full size trucks" of various manufacturers might be an interesting academic exercise it is not clear how that would relate to the question of whether the subject GM vehicles presented an "unreasonable" fire risk to their occupants, and thus contained a defect. Whatever the relative ranking of fire risk amongst the various full size trucks is, their rates all fall within the range of those for other vehicles. If we chose another accident mode, such as rollover, the rankings would certainly change. The FMVSS quite correctly do not set one standard for "full size" pickups, and another for different vehicle classes.

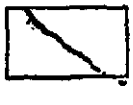

I understand there was some discussion of the standard for "comparability" concerning accident rates at last Friday's meeting. FaAA is comfortable with the well reasoned standards of comparability that the NHTSA has established in past investigations, such as the petition relating to the CJ 5/7, and has used the term in that manner.

I am looking forward to our further interaction.

Sincerely,

Roger L. McCarthy, P.E.
Chief Executive Officer

cc: Robert C. Lange, Regional Vice President
Edward Conner, Manager of Product Investigations

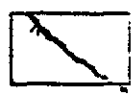

TOTAL P.04

-28

Failure
Analysis
Associates®

Engineering and Scientific Services
149 Commonwealth Drive, P.O. Box 3015
Menlo Park, California 94025
(415) 326-9400 Telex 704216 Fax (415)326-8072

VIA FAX

November 24, 1992

Mr. Terry M. Klein
DOT/NHTSA
400 7th St. NW
Washington D.C. 20590

RE: C/K Pickup Analysis - Differences between NHTSA and FaAA Analyses

Dear Mr. Klein:

I have reviewed the NHTSA programs which were given to me at the November 20, 1992 meeting. By comparing this code with the analysis performed by FaAA, I was able to identify the following differences between the NHTSA and FaAA analyses. I have not yet had opportunity to replicate the NHTSA type analysis using FaAA's databases. There may be additional differences which I was unable to discern from the programs which were provided to me.

1. Restriction to Fatal Vehicles

   FaAA used only fatal vehicles, that is vehicles in which an occupant of the vehicle was killed in the accident. NHTSA used all vehicles involved in a fatal accident.

   Restriction to Collision Vehicles

   Only collision vehicles were included in the FaAA analysis. NHTSA apparently made no such restriction. The definition of a collision vehicle was included in the October 12, 1992 report. For your convenience, the definition of collision vehicle is as follows:

   - FARS variable: Manner of Collision 1-6; or
   - FARS variable: Rollover 1 or 2; or
   - FARS variable: Initial Impact Point 1-15 (1975-81), 1-16 (1982- 1990); or
   - FARS variable: Main Impact Point 1-15 (1975-81), 1-16 (1982- 1990).

2. Method of Selection of Vehicles

DP92-016-30

NHTSA used the FARS make code and the FARS model year and the FARS VINA model to make vehicle selections. FaAA's selection is based upon the VINA/VINDICATOR decoded VIN information.

- VINA/VINDICATOR to select Vehicle Type = L (Light Truck);and
- VINA/VINDICATOR to select Body Style = (CP, CU, PC, PK, PM, PS, SP, CB, CH, CL, CS ,FB, IC, ST, YY) - Pickup Truck;
- VINA/VINDICATOR identified Make
- VINA/VINDICATOR identified Model Year
- VINA/VINDICATOR identified VSER to identify GMC and Chevy C&K. VSER = (C10, C15, C20, CC2, C25, C30, C35, R10, R15, R20, R25, R30, R35, CR3, K10, K15, K20, K25, K30, K35, GM4, V10, V15, V20, V25, V30, V35, CV3, SIE); the 1988 and later model year with inside the frame rail tanks were eliminated by excluding GMC or CHEVY trucks with fifth position of the VIN either C or K.

3. Vehicles Used

NHTSA used only the F series Ford Pickups and the D&W series Dodge Pickups. FaAA used all Ford and All Chrysler pickups as identified by make and body type. Note that the VINA/VINDICATOR program did not identify Dodge 4 wheel drive vehicles prior to model year 1977. The corresponding POLK registration was eliminated from the analysis.

4. Model Year

NHTSA restricted analysis to model years 1973-1987. FaAA included model years 1973-1989 in the FARS analyses. Model years 1973-1991 were used in the state analysis. The C&K pickups with inside the frame rail gas tanks in model years 1988 and later were excluded. The GM R/V series which were produced 1988 and later were included.

5. Direction of Impact

NHTSA apparently used only the FARS IMPACT1 to define impact. FaAA included information on rollover as well as direction of impact, and supplemented the Principal Impact code with the Initial Impact code when the Principal Impact code was missing. The Impact categories used by FaAA are:

Collision Subcategories:

*Principal Impact precedes Initial Impact

1). Rollover: Single Veh Acc and First Harmful Event = 01; or
Rollover = 1, 2 (78+); or Most Harmful Event = 01.

2). Left : 08-10 clock points

3). Right : 02-04 clock points

4). Rear : 05-07 clock points

Side includes Right and Left.

6. Definition of post collision fire.

NHTSA apparently used all fire_explosions. FaAA eliminated First Harmful Event fires.

Please feel free to call me to discuss. I will be out of the office on Wednesday, November 25, 1992. You may reach me at (510) 524-1820.

Sincerely,

Rose M. Ray, Ph.D.
Managing Scientist •

cc: Edward Conner, GM Manager of Product Investigation
cc: Robert Lange, FaAA Regional Vice President

RECEIVED
92 NOV 27 AM 12:30
OFFICE
DEFECTS INVESTIGATION

GM Current Product Engineering
General Motors Corporation

449106

November 25, 1992

GM-425A

Mr. Charles L. Gauthier, Director
Office of Defects Investigation Enforcement
National Highway Traffic Safety Administration
400 Seventh Street, S.W.
Washington, D.C. 20590

NEF-121jry
DP92-016

Dear Mr. Gauthier:

This completes our response to your letters of November 10, 1992 and November 23, 1992 requesting clarification of our October 9, 1992 response concerning the fuel storage system of certain General Motors C/K pickup trucks. General Motors requested Failure Analysis Associates to assist in responding to Questions 1 through 4 of your November 23, 1992 request. The responses to your numbered requests are detailed below.

1. *The following relate to the trucks used as "comparison" vehicles by FaAA for establishing the relative "crashworthiness" of the subject C/K pickups:*

   a. *Was the Ford Ranger (a mid-size pickup) included in "Ford pickup"? If so, please fully explain why.*

      Response: Ford Ranger pickup trucks were included in the designation "Ford pickup" as indicated in the FaAA report.

      Non-GM, small and medium-duty pickup trucks were included in FaAA's analysis along with all other light-duty vehicles. Such vehicles were included in FaAA's study based upon the rationale in Section 3.3 "Comparison Vehicle Selection" of FaAA's report (p. 19). FaAA stated:

      "Fundamentally, occupants of pickup trucks are entitled to the same level of overall safety (that is, the same level of relative rarity of collision-fire events) as are occupants of other light-duty motor vehicles: passenger cars, vans, utility vehicles, and special purpose vehicles. That is, a determination of an acceptable collision-fire rate must apply uniformly across all classes of vehicles likely to be used as passenger conveyances. NHTSA implicitly adopted this philosophy in defining the appropriate motor vehicle fuel system integrity requirement for various classes of vehicles when it promulgated FMVSS 301 to apply equally to passenger cars, light trucks, and utility vehicles.

30200 Mound Road/S3-EA Warren, MI 48090-9010

In this study, the postcollision fire rates of the GM C/K type pickup trucks were compared to the postcollision fire rates of comparison vehicles. The comparison included pickup trucks produced by all major manufacturers (Chrysler, Ford, Nissan, and Toyota) and passenger cars..."

b. *Was the Chevy S10 and/or GMC S15 pickup (a mid-size pickup) included in "C and K pickup"? If not, please fully explain why not.*

Response: No. Chevrolet S10 and GMC S15 pickup trucks were not included in the accident data tabulated for GM C and K pickup trucks, or calculations relating to GM C and K pickup trucks because the Center for Auto Safety's Petition and the National Highway Traffic Safety Administration's (NHTSA) investigation relate solely to the C/K pickup trucks with outside the frame rail fuel tanks. This tank location was not used on the Chevrolet S10 or GMC S15.

c. *Was the Dodge D50 (a mini-pickup produced by Mitsubishi) included in "Chrysler pickup?" If so, please fully explain why.*

Response: Yes. Dodge D50 pickup trucks were included in the designation "Chrysler pickup" as reported in FaAA's report.

Non-GM, small and medium-duty pickup trucks were included in FaAA's analysis along with all other light-duty vehicles. Such vehicles were included in FaAA's study based upon the rationale in Section 3.3 "Comparison Vehicle Selection" of FaAA's report (p. 19); the relevant portion of which is quoted in the response to question 1.a above and is incorporated by reference herein.

d. *Was the Chevy LUV pickup (a mini-pickup produced by Isuzu) included in "C/K pickup?" If not, please fully explain why not.*

Response: No. Chevrolet LUV pickup trucks were not included in the accident data tabulated for GM C and K pickup trucks since the LUV truck never utilized outside the frame rail fuel tanks.

2. *Was an analysis of the relative crashworthiness of the GM C/K series versus Ford F-100, F-150, F-250 and F-350 series conducted while preparing the FaAA report, "Analysis of Light-Duty Motor Vehicle Collision Fire Rates?" If not, why not and if so, please provide a copy as we discussed.*

Response: A complete set of corresponding data on Ford F-series pickup trucks was not developed while preparing the FaAA report for the reasons set forth in Section 3.3 "Comparison Vehicle Selection". However, after the report was filed, selected data from FARS has been separately broken out for Ford F-series pickup trucks. That data is tabulated in Table 1 attached hereto.

Subsequent to our meeting on Friday, November 20, 1992, GM has asked FaAA to complete a comparison of GM C and K series trucks, Ford F-series trucks, and Dodge D and W series trucks. This analysis was completed and the results of FaAA's analysis are attached in tabular form hereto as Table 2 - FARS All Collisions, Table 3 - FARS Side Collisions, Table 4 - All Collisions Six States Combined, and Side Collisions Only Six States Combined.

Small numerical differences might occur between rate data reported for C/K pickup trucks in Tables 2 through 4 attached hereto and the corresponding data included in Tables 4.2.1 through 4.4.2 from FaAA's report, because the model year restriction varies somewhat among the tables.

3. *State, by model and model year, those Nissan and Toyota trucks not used as "comparison vehicles" in the FaAA analysis provided with your response. For each vehicle identified, please fully explain why it was not included.*

Response: All Toyota and Nissan pickup trucks were included in the grouping of comparisons vehicles in FaAA's report. Table 5 attached hereto lists all of the Nissan trucks utilized in FaAA's comparison, and Table 6 attached hereto is a listing of all of the Toyota trucks utilized in FaAA's comparison.

4. *Provide a listing (similar to the one enclosed with this letter), by make, model, and model year, of all trucks included in FaAA's analysis.*

Response: Tables 5 and 6 list the Nissan and Toyota trucks used in FaAA's report. Tables of the other manufacturer's make, model and model year trucks used in FaAA's report were to have been FAXed to the NHTSA from GM's Washington, D.C. office on Friday, November 20, 1992; a duplicate of this communication will be forwarded to Mr. Terry Kline by the end of the day Wednesday, November 25, 1992. Table 7 lists the requested information for Dodge pickup trucks used in FaAA's just completed restricted analysis (ref. Tables 2 through 4 attached hereto), and Table 8 lists corresponding information for the Ford trucks used in FaAA's restricted analysis.

Please contact me if you require further information about this response or any of the attached material.

Very truly yours,

E. E. Conner
Manager
Product Investigations

Attach.

RECEIVED
92 DEC -7 PM 2:34
OFFICE
DEFECTS INVESTIGATION

GM Current Product Engineering
General Motors Corporation

December 1, 1992

GM-425A

Mr. Charles Gauthier, Director
Office of Defects Investigations
National Highway Traffic Safety Administration
400 Seventh Street, S.W.
Washington, D.C. 20590

44357

NEF-121jry
DP92-016

Dear Mr. Gauthier:

This is in reference to our telephone conversation on November 30, 1992, regarding the letter to Administrator Blakey from Harry Pearce dated November 24, 1992.

This will verify that the "additional information" referred to in Mr. Pearce's letter consists of the material provided with my letters of November 24 and November 25, 1992, together with the material provided directly to the agency from Failure Analysis Associates, Inc., during the week of November 23, 1992.

If there are additional questions regarding the material provided, please contact me.

Very truly yours,

E. E. Conner

E. E. Conner
Manager
Product Investigations

DP92-016- 34a

ATTACHMENT AA

EXPERT WITNESS REPORT - 2 January 2012 REVISION

Kline v. Loman Auto Group, Victoria Morgan-Alcala, et al.

Page Range 1

Page 840

Sport Utility Vehicle Sampling : Wheelbase to Fuel Tank Location/Protections Comparison

(KLINE VERSUS LOMANS, ET AL.)

Model Year/ Make/ Model /*Doors Version*	**Wheelbase (inches / mm)**	**Fuel Tank Location / *Material***	**Standard <u>Added</u> Fuel Tank Protection / Impact Deflecting Structure**	**Fuel Tank Skid Plate Availability**
1984-2001 Jeep Cherokee (XJ-Body) / *2 & 4 door*	101.4 / 2576	Aft of rear axle, below rear bumper structure / *Steel*	None	RPO/RDIO
1993-1998 Jeep Grand Cherokee (ZJ-Body) / *4 door*	105.9 / 2690	Aft of rear axle, below rear bumper structure / *Plastic*	None	RPO/RDIO
1999-2004 Jeep Grand Cherokee (WJ-Body) / *4 door*	105.9 / 2690	Aft of rear axle, below rear bumper structure / *Plastic*	"brush guard"	RPO/RDIO
2005-2010 Jeep Grand Cherokee (WK-Body) / *4 door*	109.5 / 2781	Mid-mount, driver side, inside and above frame rail / *Plastic*	Skid Plate	standard
2011- 2012 Jeep Grand Cherokee (WL-Body) */ 4 door*	109.5 / 2781	Mid-mount, driver side, inside and above frame rail / *Plastic*	Skid Plate	standard
1991-1994 Ford Explorer / *2 door*	102.1 / 2593	Mid-mount, pass side, inside and above frame rail / *Steel*	TBD	TBD
1991-1994 Ford Explorer / *4 door*	111.9 / 2842	Mid-mount, pass side, inside and above frame rail / *Steel*	TBD	TBD
1995-2001 Ford Explorer / *2 door*	101.8 / 2568	Mid-mount, pass side, inside and above frame rail / *Steel*	TBD	TBD
1995-2001 Ford Explorer / *4 door*	111.6 / 2834	Mid-mount, pass side, inside and above frame rail / *Steel*	TBD	TBD
2002-2010 Ford Explorer / *4 door*	113.8 / 2890	Mid-mount, pass side, inside and above frame rail / *Steel*	TBD	TBD
2011-2012 Ford Explorer / *4 door*	112.6 / 2860	Mid-mount, pass side, inside and above frame rail / *Steel*	TBD	TBD
1983-2005 Chevrolet S-10 Blazer/ *2 door*	100.5 / 2553	Aft of rear axle, below rear bumper structure / *Steel*	Heavy gauge steel plate encapsulation	n/a
1983-2005 Chevrolet S-10 Blazer/ *4 door*	107.0 / 2718	Mid-mount, driver side, inside and above frame rail / *Steel*	None	TBD
2001–2006 Suzuki Grand Vitara XL-7 / *4 door*	110.2 / 2799	Aft of rear axle, below rear bumper structure / *Steel*	Skid Plate	standard

Paul V. Sheridan

ATTACHMENT AB

EXPERT WITNESS REPORT - 2 January 2012 REVISION

Kline v. Loman Auto Group, Victoria Morgan-Alcala, et al.

Page Range 17

Pages 842 - 858

Sheridan
EXHIBIT NO. 19
5-2-96
M. MOORE

Discovery Ex. No. 538
Cause No. 7824*JG99

LeCompte

NS-BODY

SAFETY LEADERSHIP TEAM (SLT)

Customer Focus Groups

Prepared By:

Market Opinion Research, Inc.
November 1993

Gonzalo Vs Chrysler 045228

EXHIBIT 59

BACKGROUND

Purpose
The primary purpose of this research was to explore customer perceptions of current minivan safety, and to gather customer feedback regarding a number of specific safety features.

Method
A total of eight customer focus groups were conducted. Each group lasted approximately two hours. After a brief warm-up and the introductions, respondents were challenged to construct a "wish list" of safety-related features that they would like to see incorporated into their next minivan. . . (safety "concerns" were also encouraged even if the solution to the concern was not readily obvious). After the wish list had run the gambit, a series of proposed safety features were explained to the respondents and reactions to each were gathered. Finally, a brief and general discussion of minivan safety was used to close the meetings.

Locations
The groups were split evenly between Chicago and San Diego. The field work took place between November 3rd and 6th, 1993.

Sample

	CHICAGO		SAN DIEGO		TOTALS	
Minivan Ownership	Males	Females	Males	Females	Males	Females
Chrysler		10	-	8	-	16
Domestic Comp.	4	6	3	7	7	13
Import Comp.	2	8	3	9	5	17
Chrysler	10	-	11	-	21	-
TOTALS	16	24	17	24	33	48
					(41%)	(59%)

Moderator
Pete Swetish of Market Opinion Research, Inc. moderated all eight focus groups and is responsible for this summary.

Gonzalo Vs Chrysler 045229

SUMMARY OF FINDINGS

THE "WISH LIST". . . in (more-or-less) descending order of importance

- Dual front air bags are considered *"di rigueur"* for any future minivan purchase. Current owners - even those who bought their minivan "in spite of no passenger air bag" - are universal in their belief in front seat bag protection. We spoke with no one who felt that they would honestly consider another van if it were not equipped with dual front air bags. It is assumed by the (great) majority that dual bags will simply become standard equipment across all car and truck lines within a very few years.

  - "Dual air bags will become standard."

- Anti-lock brakes is another safety feature that is becoming associated with the "standard equipment" of better vehicles; i.e., the kind of vehicle that everyone buys. ABS was specifically mentioned more often in Chicago than in San Diego, but its inherent worth is generally understood by everyone. In both markets, it is typically thought of as a foul weather (slippery surface) feature.

  - "I want the guy behind me to have anti-lock brakes. (That's why I think they ought to be standard)."

- Side guard beams were volunteered in nearly every group as **extremely** important safety features. Minivan owners see their vehicle as a family conveyance and are therefore very concerned with impact intrusion. . . especially along the sides and in the rear. . . where children typically sit. **Owners are preoccupied with thoughts of their children's safety and speak about "structural strength" and "steel frameworks" to protect second and third seat occupants.** Rear tailgates and sliding side doors seem to be thought of as especially weak and vulnerable points where extra protection is warranted. The general feeling is that there cannot be too much impact protection; one San Diego mother summed it up by suggesting a "cage. . . like the stock car guys have."

  - "Metal construction around the van would convince me (of its inherent safety)."

Gonzalo Vs Chrysler 045230

- "There's extra steel reinforcement on the sides and around the frame. . . I really like that." (Villager owner)

- "The bars in the doors are the big thing for me."

- "I'm more concerned with side impacts."

- "My Aerostar has a truck frame. . . that's partly why we bought it."

- Areas of poor visibility. . . so-called "blind spots" are a huge problem to most minivan owners. It seems to be a generic problem common to all minivans, not just specific models; owners of all brands represented in this sample were heard to complain. There are several distinct problems:

1) The view directly in back of all minivans is obstructed. This is a major concern to most owners, most of whom have children in and around the home. Backing over unseen bicycles and toys left in the driveway was an occurrence reported by over half the participants in these discussions! Naturally, the fear of doing the same to an unseen child is the real terror. The concern was mentioned in every group; a workable solution would surely give a manufacturer an important marketing advantage among these family-oriented buyers. In fact, the idea of some sort of "scanning device" was suggested several times even before the proposed "back-up detection system" was revealed. And one women suggested a low-tech solution: "a fish-eye thingy in the back window." Clearly, this is a safety problem that needs a quick solution.

   - "You can't see small sports cars passing you."

2) Many minivan drivers complained of the more traditional blind spot along the rear quarter panels where cars traveling along either side could not be seen. Pulling out and "cutting people off" were often-heard results. The suggested remedy usually involved an idea for "bigger mirrors" - both rear and side. Wide-angle (convex) mirrors were not universally embraced as a workable solution; several drivers complained that these mirrors distorted distance perception and were therefore unsafe.

   - "Side mirrors. . . make them bigger!"

Gonzalo Vs Chrysler 045231

3) The third area of poor visibility is down along the very sides of the van. This is generally not considered a critical concern. Rather, the complaint seemed to arise only when backing up while turning; gauging the distance from an obstruction to the side of the van is the problem. Thus, this tended to be more of a convenience issue than a safety concern.

- Improvements in current seat belt design were called for by nearly every group. The most common complaint was the "fit" of the shoulder belt across the body of shorter people. . . people such as young children. (Current designs "cut across the neck" of shorter occupants.) Adjustment at the upper anchor pivot for all belts in the van seemed to be the solution. As it is, many parents report that their children often put the shoulder belt in back of the them in order to gain comfort and mobility.

  A second suggestion for belt design was voiced in several of the discussion groups: some type of belt system interlock that 1) would flash a warning to the driver that not all belts had been latched. or 2) would not allow the vehicle to start until all occupants had latched their belt. (Evidently, it is impossible for a car-pool driver to know if all the children are securely buckled. . . a vital concern that needs to be addressed.)

  Finally, several complaints surfaced concerning twisted belts and the lack of middle rear seat shoulder belt availability.

  With concerns for personal safety increasing every day, items having to do with "personal security" surfaced rather early in most discussions. The situation that seemed to cause the most concern was the "walk-up" at night . . . time spent outside the vehicle while unlocking doors, loading packages, etc. Women especially wanted ways to expedite this period of vulnerability. Suggestions included a remote lock system that would also turn on all interior lights (and head lights), lighted key holes, and an easy flip-forward driver's seat to facilitate rear seat package stowage. Many owners already had the remote lock system and considered it an important safety/convenience feature. Certainly, any device or feature that would speed and facilitate vehicle entry should be explored.

- Rear headrests were mentioned in half of the groups as important safety features that should be incorporated in any wish list of safety-related items. Chrysler owners were mostly in favor of the rests even though the obvious visibility problem was pointed out and discussed. A number of respondents suggested removable or "fold-down" rear headrests so that rear sight lines could be restored when the seats were not occupied.

Gonzalo Vs Chrysler 045232

- Owners complained of poor night-time vision through the dark tint window glass currently offered in many of the minivans. Vision - especially through the rear window while backing up - is very difficult. Yet, owners appreciated the daytime benefits offered by the dark glass and so did not want to give up the tinting in favor of clear glass. Several participants suggested brighter back-up lights as a solution. (High intensity back-up lamps were on the prepared list of safety items to be discussed and the idea received fairly enthusiastic response. . . especially from owners with dark glass.) Of course, the best solution would be to somehow keep the sun-load benefits of the tinted glass without sacrificing night visibility.

- The ability to "lock" the passenger power window with a switch accessible only from the driver's seat was a suggestion volunteered in several of the groups. Chrysler-owning parents report that some children can reach the passenger window lift switch with their feet while belted into certain child seats. Once this is discovered, the child (of course) turns the opening/closing of the window into a game with the driver. This is a distraction that the driver wants to do without and that a simple lock-out switch would remedy. *(NOTE: Whether this is a safety-related issue or a sanity-maintenance issue was never fully explored.)*

- In about half of the groups, someone mentioned the need to make their minivan "more stable". . . especially in cross winds. A few Chrysler owners also noted that body roll "around curves" was somewhat excessive. In truth, these opinions were in the minority and more by the way of observations than complaints. The majority of handling-related comments were, indeed, favorable. . . most Chrysler minivan owners liked the "car-like" handling of their vehicle and none cited any unnerving handling-related experiences.

- Several owners suggested improvements to the sliding side door to protect against smashed fingers, hands, and/or feet. Chrysler owners report that the side door detent is not sufficient to hold the door open when the van is on an incline. This can cause an unexpected and sudden closure with injurious results. Of course, fingers can also be caught in a door that is purposely shut and parents are constantly concerned with this possibility. . . especially when many children are involved at the same time (as in a car pool delivery). What is really needed is some type of device that could detect a closure obstruction and prevent the sliding door from completing its close. (Such a device could also be used on the passenger door where many young passengers grab while getting into the sliding door.) Judging from these group discussions, such a safety feature would be considered a **major** enhancement to any minivan.

Gonzalo Vs Chrysler 045233

- Another area where minivan owners suggested that safety could be improved is interior ergonomic layout. The problem seems to be: there is very often so much going on inside the minivan that even simple tasks like reaching for a control or for a toy that has fallen on the floor can create an unsafe condition for the driver. Participants in these groups suggested that items such as spill-proof cup holders, easy-to-find controls (well lit for night identification), and easy-to-reach storage compartments (for errant toys, etc.) would help to keep the driver focused on the job of driving.

- The idea of eliminating or (at least) controlling shattering glass in the midst of an accident came up in two different ways. First, so-called "shatter-proof" glass for the side and rear windows was suggested in several of the groups as an important inclusion to the safety "wish-list." Second, several others wondered whether the side air bags would have the residual effect of protecting occupants "from flying glass." It is a fact that, perhaps because of the large amount of surrounding glass inherent in minivan design, owners - especially parents of small children - share a very real concern about the possibility of being cut by shattered glass. So, while the idea of shatter-proof side and rear glass received relatively few original mentions, the concept of reducing this scary risk was an important one. Addressing the problem of flying glass would also enhance the entire side/rear impact integrity of a vehicle; it would seem to be a logical extension of the "steel beam" impact protection already in place. . . an **extremely** important notion to these owners.

  - (The side air bags seem OK) "But what about the windows?"

  - "Does it help with flying glass?"

Gonzalo Vs Chrysler 045234

Other Miscellaneous Suggestions

(The following is a list of safety-related suggestions that were volunteered in at least two of the groups, but did not represent wide-spread opinion.)

- Easy-to-locate horn button
- Break-away motors that would submarine under the vehicle in the event of a frontal impact. . . this feature was reported as the result of a current TV ad touting this design feature
- 4 wheel disc brakes
- Some kind of "escape" path for rear seat occupants should the sliding side door jam in an accident; suggestions included a rear driver's side sliding door, a "kick-out" rear side window, and a roof hatch like that found on some buses
- Rear air bags
- Child seat head support device for sleeping child. . . Chrysler's '94 reclining child seat was unfamiliar to all but a few participants

CONCEPT EVALUATIONS. . . a report card for several suggested features

- **Outside Signal Rear View Mirrors:** Respondents were shown a brief video tape of the signal rear view mirrors in action. *(NOTE: this was the only feature discussed that had any type of visual aid for demonstration purposes.)* There was typically some initial concern that the signal lights could be seen by the driver and so create some amount of distraction. However, once that notion had been dispelled, the basic concept of the mirrors became quite acceptable. Most respondents could see that, in certain circumstances such as passing maneuvers, the signal mirrors might be more visible to drivers in an adjoining lane and thus enhance safety. The majority, however, felt that - all things considered - this signaling advantage was of marginal real-world value. So, while most would "take it" as a no-cost feature, few would voluntarily pay extra ($100) to have it on their next vehicle.

  - "I wouldn't like to pay extra for it."

  - "OK, but I wouldn't pay for it."

  - "It can't hurt (to have them)."

Gonzalo Vs Chrysler 045235

- "It's kind of gimmicky."

- "That would be nice on the freeway."

- **Back-up Detection System:** This feature helped to solve a rear visibility concern that was often brought up early in the conversations; several individuals, in fact, suggested the detection system prior to it being revealed. The idea that the driver could be warned of any obstruction immediately behind his/her minivan was a huge hit with nearly every respondent involved in this research. The problem of "backing over" unseen objects is a very real problem for minivan owners (especially those with young children who tend to leave toys, etc. in driveways). Anything that can be done to minimize this possibility would be greeted with serious interest.

  - "This should be mandatory!"

  - "Sure! We've probably all run over something". . . while backing out of the driveway.

- **Back-up Alert:** The idea of an audible back-up alert (much like the ones found on construction equipment) received little positive reaction. The concept of warning someone in back of the vehicle that it is backing up seemed well received. However, the noise that would accompany every index of 'reverse' was thought to be too much of a compromise to peace and quiet. The words "obnoxious" and/or "annoying" were used in most groups. (Respondents wondered what the neighbors would think with such vehicles leaving very early in the morning. . . or what the local shopping center parking lot would sound like.) At the very least, customers said that such a device would have to be equipped with an "on/off" switch which, they admitted, would probably be left in the "off" position most of the time.

  - "Obnoxious!"

  - "If you could turn it off. . . like when I was backing out at two o'clock in the morning."

  - "I'm sure the neighborhood would enjoy that one!"

Gonzalo Vs Chrysler 045236

Side Object Detection System: Here again, the concept seemed like a good idea. Most minivan drivers complained of "blind spots" over their shoulders and so welcomed ideas that might address this problem. The problem (again) was the fear that the remedy (in this case, warning signals every time a vehicle was occupying the blind spot) seemed worse than the disease. For most, a better solution was improved visibility through the use of bigger mirrors, thinner B-pillars, etc.

- "I think a good mirror would solve this problem."

- "Just make it so I can see everything."

- ". . . not as important as the one (detection system) going backward."

- **Intelligent Cruise Control:** A system that would automatically decelerate the vehicle to keep a safe distance to the car in front was described. And, while the big majority of this sample owned minivans equipped with cruise control, the reaction to this feature was lukewarm. It was seen not so much as a safety feature as it was a convenience item. The reluctance to embrace the idea stemmed from an inherent reluctance to rely on unknown technology rather than good old fashion driver awareness. Over and over again, respondents worried aloud that such a device would lead to "a false sense of security" and thereby lead to carelessness on the part of most drivers. In that sense, it was perceived as a potential hazard rather than a safety enhancement. On the plus side, however, many people noted that it probably would help solve the major aggravation of cruise control usage: the "hassle" of on-gain/off-again operation on crowded highways.

  - "The problem is that it would give a false security while you're driving."

  - "It's more convenience (than safety related)."

  - "People will get too relaxed. . . you'll be spoiled."

Gonzalo Vs Chrysler 045237

- **Remote and Delay Light-Your-Way:** This item was essentially on most wish lists prior to being revealed as a proposal; it was universally recognized as a major personal safety feature. . . one that most everyone would want to have. Note that respondents added the need for all interior lights to operate with the headlights in order to enhance the overall effectiveness of the feature.

  - "A gadget. But a good one."

  - "Can we get a light around the keyhole too?"

- **Rear Facing High Intensity Fog Lamp:** Failed to generate much interest. Respondents simply did not see much of a need for such a device and worried that 1) it might confuse drivers coming up from behind, and 2) that people would forget and leave it on even in clear conditions.

  - "Would it blind people?"

  - "But where would it be positioned?"

  - "Wrong city." (San Diego respondent)

  - "In front, maybe."

- **Amber Turn Signals:** This was a subject that resulted in lot of "no opinion" votes. And, those with opinions were pretty much split down the middle between favoring red or amber lenses. Bottom line: based on this research, consumers simply do not care.

  - "I don't think it makes any difference, does it?"

- **Bright Back-up Lights:** This was a reasonably popular idea, especially among those with dark tint glass. The two features seem to package well together. . . the dark glass tending to create a visibility problem. . . the high intensity back-up lamps helping to solve the problem.

  - "Yes! To cut through that tint."

  - "Make 'em retro-fitable."

Gonzalo Vs Chrysler 045238

Automatic Tire Pressure Adjustment: This system received more than a fair amount of discussion in nearly every group. Respondents were nearly all agreed that proper tire inflation was an important part of vehicle maintenance and would enhance ride and handling, tire wear, and fuel mileage. There was not, however, universal agreement on the need for this on-board monitoring and adjustment system. Arguments in favor of the system included 1) the importance of proper tire inflation, 2) the convenience of having it looked after automatically, 3) slow leaks would never strand the vehicle, and 4) the on-board compressor could be adapted for other uses. Arguments against included 1) added vehicle complexity (i.e., "something else to go wrong"), 2) tires already checked at every "quick-change" oil visit, 3) cost, and 4) the (perceived) difficulty of purposely over-riding normal inflation specification in the event of carrying heavy loads, using non-OEM tires, etc.

The customer's bottom line on this feature is this: a very worthwhile result (having properly inflated tires), but the perceived complexity and cost ($200) may outweigh the benefit. Several groups suggested a middle ground. . . that the system offer (only) a low pressure warning to alert the driver who would then have to stop and have the tire filled manually. This seemed to provide the really important warning element and, it was presumed, eliminate much of the complexity and cost. At $100, this seemed to be the better offer to those who heard it.

- "They check my tires at Jiffy Lube."

- "The more stuff (on a vehicle), the more potential for trouble."

- "That gets you away from checking your tires (and so may ultimately lead to tire neglect)."

- "You could make the $200 back easily (with increased tire life)."

- "A monitor (only) would be good enough."

Gonza10 Vs Chrysler 045239

- **Automatic Tint Mirrors:** Described as mirrors that would automatically darken when sunlight and/or bright lights hit them (much like photo-gray eye glasses), the response was generally positive. Glare is a problem for minivan owners and anything that can be done to minimize it is generally welcomed. (Several people admitted that they sometimes turn their driver's side outside mirror down to eliminate glare from headlights. . . even though rendering that mirror totally useless!) And a number of respondents volunteered that the idea made so much sense that they figured it would become a "standard thing" in a few years.

  - "That shouldn't be an option. . . that's part of the advancement of technology; it should be part of the car."

  - "Who cares?"

  - "That's OK, if it has a fast response time."

  - "That sounds like it would be standard in a few years."

  - "Makes sense."

- **Rear Headrests:** As reported earlier, rear headrests are considered by most minivan owners to be important safety features that they would like incorporated. This became apparent when, in response to the moderator's caution that headrests would interfere with rearward visibility, respondents quickly came up with solutions to that particular objection. Suggestions included detachable headrests or (preferably) headrests with some kind of fold-down feature that would solve the rear visibility problem when they were not needed. (Leaving the center seats without headrests to create a sort-of viewing tunnel seemed to be a weak compromise that could not <u>really</u> be judged without trying an actual vehicle so equipped.) The point is: the absence of rear headrests <u>is</u> noticed by many Chrysler owners and <u>is</u> the source of some concern.

  - "It would be a good idea to have them on <u>all</u> the seats."

  - "Yes! But could they be smaller?" (Quest owner)

  - "Could they be adjustable. . . up, down, and tilt?"

Gonzalo Vs Chrysler 045240

- **Side Air Bags:** While not embraced unanimously, the concept of side air bag protection provoked a lot of discussion and much interest. The idea was especially interesting because it provided bag protection for the rear seating area and "that's where the kids sit." Even at a given price of $750, most of the interest remained strong. It must be noted, however, that nobody felt that side air bags would or should take the place of side guard beams; air bags would only supplement the beam protection. The bottom line: a majority felt that the bags would be a wise investment, even at $750.

  - "I'd pay $750. . . if they <u>proved</u> they were safe."

  - "Yes! That's where the kids sit!"

  - "I'd rather have reinforced sides. . . if I was choosing priorities on that."

  - "I'd like that rubber room."

  - "I like that idea, because that's where most of us put our kids. I'd rather her hit an air bag than the side of the car."

  - "I still want the reinforcements in the side."

  - "An armored car we're developing here."

  - "Would they save on insurance?"

Gonzalo Vs Chrysler 045241

- **Cellular Phone Accident / Theft Alert:** This enhancement to cellular technology was received with cool reactions. Only a minority of this sample currently had a cellular phone installed in their minivan, but even those who did were less than enthusiastic with this concept. The general feeling was that, in the event of an accident, there would always be "somebody around" to call for help. . . that the opposite situation was so remote as to be nearly impossible. And, in terms of the theft location feature, most respondents knew that similar systems (i.e., Lojack) were available today and thought the value of something like this to be marginal. Finally, respondents were quick to point out that both systems relied on the 911 system to be effective. . . a reliance that seemed problematic to most.

  - "Somebody else will call."

  - "That would be nice, I suppose."

  - "I don't think 911 would support that."

- **Remote Keyless Entry with Panic:** As previously discussed, the concept of expediting vehicle entry was important to nearly all owners. Because this feature seemed to address this need, it was well received by both women and men.

- **Sleep Alert:** While many participants could recall a situation in their life where such a device would have been nice to have, few felt that they had any strong need for it today. Many felt that safety resources would be better spent on more important items like structural reinforcements, rear air bags, etc. The sleep alert was often called a "gimmick "

  - "That should be an option. . . I know people who could use it."

Gonzalo Vs Chrysler 045242

A FEW FINAL OBSERVATIONS. . .

- It may "go without saying," but it's going to be repeated here: safety is an issue that seems uppermost on everyone's mind today. Safety is selling. Nearly every respondent admitted to at least some "research" into the safety of the minivans on their proposed shopping list. Sources for their research include Consumer Reports, government crash test results, ad claims, and conversations with sales personnel. The lesson here should be obvious: a strategy of safety leadership in minivans is most definitely well conceived, but will require more than simply a program of upgraded hardware. To be successful will require that the "safety news" get out to prospective buyers and be supported by bona fide and independent sources. . . such as Consumer Reports and official government crash tests. Customers admit that advertising can be a source for this type of information and so advertising must become an integral part of the overall strategy. Note here, however, that one of the not-so-positive readings from this research was the fact that relatively few of these minivan owners knew that Chrysler's '94 minivan line-up had side beam protection and conformed to 1998 passenger car safety standards. So, although clearly not an advertising recall study, there is at least some suspicion that lack of advertising exposure may be hindering the overall potential of the '94 safety strategy. Food for thought.

- It became fairly obvious during the course of this research that, for many, the primary concern with vehicle safety was focused on the passenger compartment. . . due in part to the (nearly) standardization of dual front air bags. Most of this sample were parents of children in pre-teen years. And most of this sample talked about things like <u>overall structural integrity</u> and side guard beams. . . things that protect <u>everyone</u> in the vehicle. Clearly, the next safety "frontier" is in back of the front seats.

- Throughout this study, respondents kept returning to <u>basic structural concerns</u>. Is the engine mounted in such a way that it won't crush me in the event of a head-on? Will the roof cave in if the van rolls over? Will we survive a serious side impact? Does the rear tailgate have a guard beam? These were the recurring threads that kept running through group after group. Several times the moderator described how a manufacturer could exceed government frontal crash regulations by designing and testing front ends that would survive diagonal frontal crashes. . . as opposed to simple straight-on frontal impacts against flat surfaces. Each of the several times that the technique was described, the entire group seemed to communicate a message of "Yeah, that's the kind of stuff we want to hear." (Again, this study was never meant to be an advertising concept investigation and so this kind of interpretation is, admittedly, a stretch. However, the basic message of structural strength was a recurrent theme in these groups and as such deserves consideration. It is included here for that reason.)

Gonzalo Vs Chrysler 045243

It cannot be over emphasized: vehicle safety is a perceptual thing. . . consumers cannot crash-test vehicles themselves; consumers can only form opinions from inputted data. Volvo, it is conceded by nearly everyone, has become the gold standard of vehicle safety. Yet, when consumers think about Volvos, they do not think about air bags, automatic tint mirrors, or back-up alerts. They think about **the basic structural integrity** of the Volvo design. . . because that's what Volvo has steadily communicated. (Did you know, for instance, that "Volvo has a complete roll cage?") "Gimmicks" are just not part of the image or the perception of what a Volvo is.

- Another small insight into the general tone of the discussions involves a subtle difference between the average man's view of vehicle safety and the average women's. Men, it turns out, tend to think and talk in terms of accident avoidance items; women speak mostly of accident survival features. This may have been the accidental result of a rather small overall sample (eighty-one total respondents). But it may be indicative of underlying thought patterns that may be leveraged in advertising and merchandising efforts. More work is needed here to be sure.

- A final comment regarding the possible contradiction of trying to establish an image of minivan safety leadership and yet not offering ABS as standard equipment across the complete minivan line: respondents were asked to discuss this potential incongruity and opinions were generally split with a slight majority feeling that it would be impossible for a manufacturer to claim safety leadership without offering ABS as standard equipment. However, a sort of "middle ground" emerged in several groups that was agreeable to people on both sides of the issue. . . it would be reasonable for a company that was claiming safety leadership to offer a non-ABS minivan to the commercial market . . . as long as it does not reach the personal-use or "family" market. (One respondent in San Diego suggested an even more simplistic solution: "Hire the Volvo publicists.") Again, it must be pointed out that this research was never aimed at this particular issue and may not fully represent the prevailing sentiment; it is offered here as directional information only.

Gonza10 Vs Chrysler 045244

ATTACHMENT AC

EXPERT WITNESS REPORT - 2 January 2012 REVISION

Kline v. Loman Auto Group, Victoria Morgan-Alcala, et al.

Page Range 26

Pages 860 – 885

Gonzalez, et al. vs. Chrysler

Gregory J. Ridella

November 11, 1996

Freelance Court Reporters (810) 779-1800

IN THE UNITED STATES DISTRICT COURT
FOR THE SOUTHERN DISTRICT OF TEXAS
CORPUS CHRISTI DIVISION

LUIS GONZALEZ, INDIVIDUALLY, AND AS NEXT FRIEND OF MARIA GONZALEZ, AN INCAPACITATED PERSON, AND LUIS ANTONIO GONZALEZ, MARY LOU GONZALEZ AND MELISSA GONZALEZ, MINORS, AND JESUS HERNANDEZ, MEMO HERNANDEZ, MARCELO HERNANDEZ AND MARIA BELEN PENA,

Plaintiffs,

vs. Civil Action No. C-95-470

CHRYSLER CORPORATION,

Defendant

vs.

MARTIN HERNANDEZ AND ENEDELIA RAMIREZ,

Third-Party Defendants.

THE DEPOSITION OF
GREGORY J. RIDELLA
November 11, 1996

The telephonic videotaped deposition of GREGORY J. RIDELLA, a witness in the above-entitled matter, taken before Melinda S. Moore, CSR-2258, a Notary Public, at 5445 Corporate Drive, Suite 250, Troy, Michigan, on November 11, 1996, commencing at or about 9:26 a.m.

APPEARANCES:

Perry & Haas
BY: MIKAL C. WATTS
2100 Frost Bank Plaza
P.O. Box 1500
Corpus Christi, Texas 78403-1500
Appearing on behalf of Plaintiffs
(Present in Corpus Christi, Texas)

Oppenheimer Wolff & Donnelly
BY: ERIC R. MILLER
Plaza VII
45 South Seventh Street
Suite 3400
Minneapolis, Minnesota 55402-1609
Appearing on behalf of Defendant
Chrysler Corporation

Chrysler Corporation
Office of the General Counsel
BY: RITA A. BURNS
1000 Chrysler Drive
Auburn Hills, Michigan 48326
Appearing on behalf of Defendant
Chrysler Corporation

VIDEO TECHNICIAN: Tim Reitman, Reitman Video Specialists (810) 344-4271

STATE OF MICHIGAN
IN THE CIRCUIT COURT FOR THE COUNTY OF WAYNE

MARCIA TREAT and DAVID TREAT, Individually and DAVID TREAT, as Next Friend of JEFFREY TREAT and KEVIN TREAT, Minors,

Plaintiffs,

vs. No. 94-433467-NP

CHRYSLER CORPORATION, a Michigan corporation,

Defendant.

THE DEPOSITION OF
GREGORY J. RIDELLA
November 11, 1996

The telephonic videotaped deposition of GREGORY J. RIDELLA, a witness in the above-entitled matter, taken before Melinda S. Moore, (CSR-2258), a Notary Public, at 5445 Corporate Drive, Suite 250, Troy, Michigan, on November 11, 1996, commencing at or about 9:26 a.m.

APPEARANCES:

Oppenheimer Wolff & Donnelly
BY: ERIC R. MILLER
Plaza VII
45 South Seventh Street
Suite 3400
Minneapolis, Minnesota 55402-1609
Appearing on behalf of Defendant
Chrysler Corporation

Chrysler Corporation
Office of the General Counsel
BY: RITA A. BURNS
1000 Chrysler Drive
Auburn Hills, Michigan 48326
Appearing on behalf of Defendant
Chrysler Corporation

VIDEO TECHNICIAN: Tim Reitman, Reitman Video Specialists (810) 344-4271

No. 37,346

JOHN AND TAMMY MATTHEWS, INDIVIDUALLY AND AS NEXT FRIEND FOR STEVI WESTON, A MINOR	)	IN THE JUDICIAL
VS.	)	DISTRICT COURT OF
CARLAS ORTIZ SMITH, ELKHART INDEPENDENT SCHOOL DISTRICT, CHRYSLER CORPORATION, AND ROGER CONN CHRYSLER-DODGE-PLYMOUTH-JEEP-EAGLE, INC.	)	ANDERSON COUNTY, TEXAS

THE DEPOSITION OF
GREGORY J. RIDELLA
November 11, 1996

The telephonic videotaped deposition of GREGORY J. RIDELLA, a witness in the above-entitled matter, taken before Melinda S. Moore, (CSR-2258), a Notary Public, at 5445 Corporate Drive, Suite 250, Troy, Michigan, on November 11, 1996, commencing at or about 9:26 a.m.

APPEARANCES:

Perry & Haas
BY: MIKAL C. WATTS
2100 Frost Bank Plaza
P.O. Box 1500
Corpus Christi, Texas 78403-1500
Appearing on behalf of Plaintiffs
(Present in Corpus Christi, Texas)

Oppenheimer Wolff & Donnelly
BY: ERIC R. MILLER
Plaza VII
45 South Seventh Street
Suite 3400
Minneapolis, Minnesota 55402-1609
Appearing on behalf of Defendant
Chrysler Corporation

Chrysler Corporation
Office of the General Counsel
BY: RITA A. BURNS
1000 Chrysler Drive
Auburn Hills, Michigan 48326
Appearing on behalf of Defendant
Chrysler Corporation

VIDEO TECHNICIAN: Tim Reitman, Reitman Video Specialists (810) 344-4271

I N D E X

WITNESS:	PAGE:
GREGORY J. RIDELLA	
Examination by Mr. Watts	11
Examination by Mr. Miller	66
Examination by Mr. Watts	86

E X H I B I T S

Deposition Exhibit No. 1
Information Sheet re: FSNCTC19

Deposition Exhibit No. 2
7/14/95 Letter to Thomas G. Kienbaum
from Courtney B. Morgan, Jr.
Re: Chrysler vs. Sheridan

Deposition Exhibit No. 3
Chrysler vs. Sheridan
Affidavit of Dennis C. Malecki

Deposition Exhibit No. 4
Chrysler vs. Sheridan
Affidavit of Richard A. Winter

Deposition Exhibit No. 5
Chrysler vs. Sheridan
Deposition of Paul V. Sheridan
7/26/95
Pages 1 through 28

Deposition Exhibit No. 6
Chrysler vs. Sheridan
Deposition of Paul V. Sheridan
7/26/95
Pages 25 through 28

Deposition Exhibit No. 7
Chrysler vs. Sheridan
Affidavit of Henri LaFrance

Troy, Michigan
November 11, 1996
* * * * *

VIDEO TECHNICIAN: Today's date is November the 11th, 1996, and we're on the record at 9:26 a.m. This is the video deposition of Gregory Ridella. We're at the law offices of Oppenheimer Wolff & Donnelly in Troy, Michigan.

Counsel, can you put your appearance on the record, please.

MR. WATTS: My name is Mikal Watts. I represent the Matthews plaintiffs as well as the Gonzalez plaintiffs.

MR. MILLER: Eric Miller on behalf of Chrysler Corporation.

VIDEO TECHNICIAN: Can the witness be sworn, please.

* * * * *

GREGORY J. RIDELLA

after having been first duly sworn by the Notary Public, was examined and testified on his oath as follows:

EXAMINATION

BY MR. WATTS:

Q Name, please?

A Gregory, middle initial J, Ridella, R-i-d-e-l-l-a.
Q Mr. Ridella, what do you do for a living?
A I'm an attorney for Chrysler Corporation.
Q How long have you worked for Chrysler Corporation?
A Sixteen years.
Q Hello.
A Sixteen years, Mikal.
Q Oh, okay. What is your present position within the Chrysler Corporation?
A My present position is senior staff counsel.
Q Who is your immediate supervisor?
A Steven B. Hantler, H-a-n-t-l-e-r.
Q And what area of responsibility do you have within the Office of General Counsel of Chrysler Corporation?
A I'm responsible for providing legal advice and counsel to the personnel department and the employee benefits department.
Q Do you have any involvement with product liability litigation?
A I do not.
Q Except for serving as a witness?
A This one time, yes.

Q Okay. Mr. Ridella, I want to take you back to the fall of 1994. When were you first contacted about a Chrysler employee by the name of Paul Sheridan?
A I was contacted on December the 21st, 1994.
Q Is that the first time you even knew that a gentleman by the name of Paul Sheridan existed?
A No, it is not.
Q And when is the first time that you knew of Paul Sheridan?
A Probably around 1990.
Q Okay. Now, when you were contacted on December the 21st of 1994, what did you begin to do?
A I was contacted to attend a meeting on that date, and I cleared my calendar so that I could attend that meeting on that date.
Q Who was present at this meeting?
A Present was a Mr. Paul Smuts (phonetic), Dick Winter, Jerry Miller, John Fonger, and Joseph Marshall.
Q Where was this meeting held?
A It was held in Highland Park, Michigan at the Chrysler World Headquarters.
Q What conference room?
A I can't recall, Mikal.

Q What time was it held on the 21st?
A I believe it was in the afternoon.
Q Who called the meeting?
A I don't know but I was asked to attend by Mr. Paul Smuts.
Q Who is Mr. Paul Smuts? What is his position at Chrysler?
A Mr. Smuts presently is the executive director of personnel.
Q We he the executive director of personnel in December of 1994?
A I don't recall.
Q Okay. Was he one of your -- well, strike that. Mr. Winter, what was his position in December of 1994?
A I believe that he was the general manager of Minivan Operations.
Q Mr. Jerry Miller?
A Jerry Miller was the manager of Security Operations.
Q John Fonger?
A John Fonger to the best of my recollection was a security investigator at that time.
Q And Joseph Marshall?
A Joseph Marshall was an attorney at the Dickinson,

Page 13

Wright law firm.
Q. Mr. Ridella, I have been given the representation by Chrysler's counsel, Mr. Miller, that the only subject that you are going to testify on is the maintenance of Paul Sheridan's files from the time that they were taken from his office to the present. Is that your understanding of your involvement in this case?
A. In this case, or -- in this deposition, you mean?
Q. Yes.
A. Yes.
Q. All right.
MR. WATTS: Mr. Miller?
MR. MILLER: Yes, sir.
MR. WATTS: Is that an agreement that we have, or do I need to just probe and probe and probe all day long? Or can I limit my questions to that particular subject with the knowledge that he will not be asked questions outside of that subject at the time of trial?
MR. MILLER: If I understand your question, Mr. Ridella's purpose here is to testify regarding the custody and control of the files maintained by Mr. Paul Sheridan.
MR. WATTS: Okay. And he will not be

Page 14

offered at the time of trial on any other subjects?
MR. MILLER: That is my understanding, yes.
MR. WATTS: Okay. And with that understanding, I will limit my questions to that particular subject.
Q. (BY MR. WATTS): Mr. Ridella, when were the files taken out of Mr. Sheridan's office?
A. To the best of my recollection, they were removed on December the 19th, 1994.
Q. And when was Mr. Sheridan's office locked to prevent others from gaining egress to it?
A. Mr. Sheridan worked in an area, a cubicle area. He did not have an office with a locked door.
Q. Okay. All right. And so on December the 19th, his files were removed from that cubicle area?
A. That is correct.
Q. And by whom were his files removed?
A. The files were boxed by a Mr. Roger Stogran (phonetic) -- I can't spell his last name -- and a Miss Nancy Ray. Nancy Ray was the director of -- pardon me, the manager of the personnel function and she had ordered Mr. Stogran to begin the boxing of Sheridan's records and the

Page 15

transportation of those records to a security location within the Auburn Hills Technology Center where Mr. Sheridan worked.
Q. Okay. So on December the 19th, Mr. Stogran and Mrs. Ray boxed up his files and they transported them to a security location within the Chrysler Technical Center in Auburn Hills, Michigan?
A. Yes, and that was with the assistance of a Mr. Brian Bradley who was the manager of Security Operations at the Auburn Hills Technology Center.
Q. Okay. At the time that this procedure was taking place, were you aware that it was happening?
A. No, I was not.
Q. Okay. When were you first made aware that Mr. Sheridan's files had been taken from his office?
A. To the best of my recollection, early January of 1995.
Q. And how was it that you first became aware that Mr. Sheridan's files had been removed from his office?
A. I can't recall, Mikal.
Q. Okay. Now, Mr. Sheridan had a computer in his office; is that correct?
A. Yes, he did.
Q. Did that computer have software in it?

Page 16

A. I can't recall.
Q. That computer had disks with information content in it?
A. There were computer disks found among the effects of Mr. Sheridan, and those were placed in storage also in the security area, yes.
Q. Who placed the computer disks found within Mr. Sheridan's office in storage?
A. All of Mr. Sheridan's effects, his documents, any disks that were found were placed in storage by Mrs. Ray and Mr. Stogran, again, with the assistance of Mr. Brian Bradley.
Q. Mr. Ridella, is it your sworn testimony under oath that nobody accessed his files?
A. At what time period, sir?
Q. At any time period.
A. Access was obtained to Mr. Sheridan's files at my direction and also it occurred at one other time prior to my involvement that I'm familiar with.
Q. All right. Let's talk about those two times. And by the way, in that last answer when you said access to his files, I didn't ask you the question but we were both talking about computerized files, right? Hello.
A. Computerized files --

Page 17

Q. In other words, that last question that I asked you is when were his files accessed. I meant computerized files or data from his computer. Is that what you meant by your answer?
A. No, I meant -- I meant generally, all his files.
Q. Okay. Let's split it up for a second. With regard to your general answer about access was obtained on two occasions, once at your direction and once before the materials were taken from his office, you talked about that in the context of his files generally; is that right?
A. That's correct.
Q. Before the files were removed from his office, who had access to them?
A. Like I said, the files were removed and placed in storage on December the 19th of 1994, placed in storage in a storage facility in the Auburn Hills Technology Center, security department, and to the best my recollection and knowledge, nobody had access to those documents until early part of January of 1995.
Q. All right. In the early part of January of 1995, who had access to the documents?
A. I understand that Mr. Dennis Malecki, who was Paul Sheridan's supervisor, and Dick Winter, who

Page 18

was Mr. Malecki's supervisor, obtained access to Mr. Sheridan's files by entering the locked security room where the files were stored.
Q. And who was with them?
A. Mr. Brian Bradley was the manager of the function -- of the Security Operations, I believe opened the facilities for them and Mr. Malecki and Mr. Winter were alone in the room.
Q. And for what reason were Mr. Malecki and Mr. Winter allowed into the secured room to access Mr. Sheridan's files in early January of 1995?
A. Mr. Winter informed me that he went into the security room for the purpose of determining what was Chrysler's property and what was Mr. Sheridan's property. He and Mr. Malecki made some markings on the boxes in which the documents were stored and then they left the room.
They also located some Federal Express air bills which they handed to Mr. John Fonger who was present outside the room.
Q. Were any documents removed from the files at that time?
A. Mr. -- Mr. Fonger had removed the Federal Express air bills from the room -- He took them with him after he had been handed those by Mr. Winter and

Page 19

Mr. Malecki.
Q. Okay. When was the next time somebody was granted access to those files?
A. I became aware that Mr. Malecki and Mr. Winter had obtained access to the room shortly thereafter, and at that point in time I instructed Mr. Fonger that no individual would be gaining access to that room at the security office except through my permission.
Q. Mr. Malecki and Mr. Winter did not have your permission to access the files in early January of 1995; isn't that correct?
A. That is -- that is correct, they did not seek my permission, yes.
Q. And Mr. Malecki and Mr. Winter who were -- they were both in the Minivan Operations; is that right?
A. They were Paul Sheridan's superiors.
Q. And Mr. Malecki and Mr. Winter obtained access to Paul Sheridan's files in early January of 1995 both without your permission and without your knowledge; is that correct?
A. That is correct.
Q. Now, how many days after they had been in this room did you learn that they had been there?

Page 20

A. I think it was three days.
Q. And on the same day that you learned that they had been in this room without your knowledge and without your permission, you issued the instruction to Mr. Fonger that from here on out, nobody else was going to be allowed in that room without your express permission; is that right?
A. That is correct.
Q. Was the access to the files by Mr. Malecki and Mr. Winter in early January of 1995, which was done without your permission and without your knowledge, was it videotaped?
A. I don't know.
Q. Well, to your knowledge, was it videotaped?
A. I don't think it was.
Q. All right. You haven't seen any such videotape of that entrance to the files by Mr. Sheridan's supervisors, Mr. Malecki and Mr. Winter, who were both with Minivan Operations?
A. That is correct, I have not seen any videotape.
Q. Well, does Chrysler have videotape equipment at its disposal?
A. I believe it does. We have a graphics department.
Q. Okay. And did anybody ever ask Mr. Malecki and

Page 21

Mr. Winter why they didn't videotape their access to these very sensitive files?
A. I don't know.
Q. You never did?
A. I never did.
Q. Okay. After Mr. Malecki and Mr. Winter accessed the files in early January of 1995 without your knowledge and without your permission, three days later you issued an order to Mr. Fonger, a security man, that nobody was to access the files without your permission, correct?
A. That is correct.
Q. And subsequent to that point in time, did you ever go into the room where these files were to check and see whether the same amount of files that were taken out by Mr. Stogran and Mr. (sic) Ray were still present?
A. I went into the room probably in the latter part of February, early part of March of 1995.
Q. And in late February, early March of 1995, who did you go into the room with the Sheridan documents with?
A. I went into the room with our outside counsel for the purpose of beginning a process of inventorying the documents.

Page 22

Q. And with outside counsel, that would be the Dickinson, Wright firm?
A. That is correct.
Q. And would that include Mr. Marshall?
A. He was not present.
Q. Who was present from the Dickinson, Wright firm when you went into the room with the Sheridan documents in late February, early March of 1995?
A. I believe that it was Mr. Charles Clippert.
Q. Mr. Charles Clippert. And Mr. Clippert works for Dickinson, Wright?
A. Yes, he does.
Q. All right. And so was it just the two of you?
A. I don't recall.
Q. Well, were you there?
A. I was there.
Q. Was Mr. Clippert there?
A. I believe that he was, yes.
Q. Was anybody else there?
A. Others could have been because we were beginning a process of inventorying the documents and others were present with us.
Q. Who else was there?
A. We had selected three individuals to begin an inventorying process. When I say we, Mr.

Page 23

Clippert and myself, and that was a Miss Catherine Moran, a Mr. Charles Murphy, and a Sharon Vasher.
Q. Catherine Moran worked where?
A. She's in the security department in the Chrysler Highland Park facility.
Q. Mr. Charles Murphy, where does he work or where did he work?
A. He is a -- he is presently and at the time was a security supervisor working for Mr. Bradley at the Auburn Hills Technology Center.
Q. And Sharon Vasher?
A. She is a paralegal working for the Dickinson, Wright law firm.
Q. Okay. And so -- by the way, in January of 1995 when Mr. Malecki and Mr. Winter went into the room with the Sheridan documents without your knowledge or consent, did anybody at Chrysler invite Mr. Sheridan or his legal counsel to be present to make sure that nothing was done untoward toward the file?
A. Mr. Sheridan was not invited.
Q. Was Mr. Sheridan's legal counsel invited?
A. No, they were not.
Q. And in early February or -- strike that.

Page 24

In late February and early March of 1995, when yourself, Mr. Clippert, perhaps Ms. Moran, Mr. Murphy and Miss Vasher, the Chrysler representatives and the Dickinson, Wright representatives went into this room with the Sheridan files, did anybody invite Mr. Sheridan or his legal counsel to observe to insure that nothing untoward happened towards the files?
A. I want to clarify for you, Mr. Watts, the purpose of that document review in late February, early March.
Q. Well, why don't you answer the question first and then I'll ask you the question of the purpose.
A. They were not present.
Q. All right. Was anybody -- did anybody inform them that people were about to go into the files and perform an inventory?
A. Yes, they were aware of that.
Q. Okay. Was any videotape taken of the inventorying process?
A. No, there was not.
Q. Okay. Now, how long did this inventorying process in late February, early March take place?
A. I can't recall exactly, Mr. Watts, but it was a lengthy process, a couple days.

Page 25

Q Now, at the time that this inventorying process took place in late February, early March, were you aware that Chrysler was under an order by a state district judge in Tampa, Florida not to disturb the files?
A I was unaware of any order from a court in Tampa, Florida.
Q At the time that you all performed this inventory in late February, early March of 1995, were you aware of any orders across the country prohibiting Chrysler from disturbing the Sheridan files?
A No, I was not.
Q Okay. Prior to the inventorying of the Sheridan documents in late February, early March of 1995, had you had any discussions with anybody in the Office of General Counsel defending product liability cases against the Chrysler minivan?
A No, I did not.
Q Okay. So I take it that prior to February, early March of 1995, nobody in the Office of General Counsel had informed you of any orders with regard to the Sheridan files concerning the Chrysler minivan product liability liftgate latch litigation?

Page 26

A I can't recall any discussions.
Q Okay. When you said that the inventorying process took quite a while, how many -- are we talking about several days or several weeks?
A I think I said it took two days, a couple days. That's my recollection of it.
Q All right. And at the end of the couple days, was the room locked up again?
A Yes, it was.
Q All right. And would the inventorying process that took place between Chrysler's security personnel, yourself and Chrysler outside counsel, the Dickinson, Wright firm -- prior to that inventory, had anybody done an inventory of the Sheridan files?
A Let me clarify, Mr. Watts, that I and Mr. Clippert were not doing the inventorying, which your question had implied. The inventorying was done by the three individuals I mentioned earlier.
Q That's a fair qualification. Let me see if I can't go about it this way. During the process that took two days of inventorying the files, did you watch the process to make sure that no documents had been taken away?

Page 27

A I was there for part of the process.
Q But you were not there for all of the process?
A That's correct.
Q And the process was not videotaped?
A It was not videotaped.
Q Okay. Now, prior to this process of the inventorying of files in late February, early March of 1995, had anybody else gone in and inventoried the documents to document what it was that was in the files?
A No, I gave nobody permission to go into the office area and to inventory the documents.
Q Well, when Mr. Winter and Mr. Malecki went in there without permission, did they inventory the files?
A They did not inventory the files. They made markings on the doc -- on the boxes to the best of their knowledge of what was Chrysler property and what was Sheridan property.
Q Okay. Subsequent to the late February, early March of 1995 inventorying process that you've described for me, when was the next time somebody was allowed into the room with the Sheridan files?
A The next incident occurred or next event occurred

Page 28

in late part of March of 1995 when the documents were transported.
Q Where were the documents transported in late March of 1995?
A Well, After the inventorying was completed in March, early March of 1995 -- again, let me clarify, at the request of a court here in Michigan -- we transported the documents. The documents were transported at my direction, I should say, from the locked security area at the Auburn Hills Technology Center to a locked room in the General Counsel's office in Highland Park, Michigan, which at the time was where Chrysler's World Headquarters was.
Q Where was the locked room at the Office of General Counsel located?
A It was located in the area where I work, where I worked, I should say, at the -- again, at our Highland Park headquarters in Highland Park, Michigan.
Q Who had the key to the locked room?
A I did.
Q Anybody else?
A Nobody else did.
Q Anybody access those files during the time that

Page 29

they were in the locked room?
A Yes, there were other occasions.
Q Okay. Let's talk about those. Tell me the first time that somebody accessed the Sheridan files in the locked room at Chrysler's Office of General Counsel in Highland Park.
A I can't recall the first time, Mr. Watts, but I remember that Mr. Sheridan and his lawyers came in April of 1995 to review the documents, and that they came two or three times in April of 1995. When they came at that time I had authorized the moving of the documents from the locked room to a conference room next door to that room so that they had more space to review the documents.
Q You told me you could not recall the first time that somebody accessed the files from the locked room at the Office of General Counsel. Prior to Mr. Sheridan's lawyers arriving to look at the files, did anybody access that locked room?
A I can't recall, Mr. Watts, if after the boxes were taken to Highland Park, transported to Highland Park, if the Dickinson, Wright lawyers came to look at the documents before Mr. Sheridan and his lawyers arrived or afterwards, but they

Page 30

did look at the documents.
Q Mr. Ridella, was any log kept as to who went in and who went out of that room?
A I don't have a log but I've got a very good recollection of who was in the room.
Q But you don't have a recollection as to when it took place?
A I can't recall the exact dates right now.
Q Who was in the room whenever it took place?
A When what took place, sir?
Q You told me you have a very good recollection of when it took place and I'm asking you, who was in the room?
A I recall that Mr. Sheridan came in April of 1995 with his attorneys, Mr. Morgan, and Mr. Mazur. When they were present on each of the three occasions, in the room with them was Mr. Scott Hamilton of Dickinson, Wright or Mr. Bob Brown of Dickinson, Wright, both attorneys at the firm, or there was a security official with them as well.
Q Why were there Chrysler lawyers and a security official there when Mr. Sheridan and his lawyers were going through the Sheridan documents?
A To observe.
Q Why would you want them there to observe?

Page 31

A It seemed prudent at the time.
Q Prudent for what purpose, Mr. Ridella?
A Well, it seemed to me -- it seemed to all of us, both myself and outside counsel, that -- to have them present with the documents and with them present as well was the right thing to do, so we -- I must say that while they were present, Mr. Morgan and Mr. Mazur, and Mr. Sheridan expressed no objections.
Q Well, what I'm curious about is why did it seem to be a prudent thing to do?
A Because I think it was just plain out prudent, Mr. Watts. I can't think of a different way to express myself other than to say that I think it was -- I think that it was accomplished. We were there, they were there at the time with the lawyers and Mr. Sheridan, and it occurred.
Q You know, brushing my teeth every night is a prudent thing to do but I have a purpose for doing it, and that's to keep my teeth clean. And you've established the fact that it was a prudent thing to do, but why was it prudent? What was the purpose of doing it?
MR. MILLER: Objection, repetitive. It's asked and answered.

Page 32

Q (BY MR. WATTS): Go ahead, Mr. Ridella. Why don't you try to give me a responsive answer.
MR. MILLER: Objection, argumentative. He's already responded to the question twice.
Q (BY MR. WATTS): What was the purpose for having Chrysler representatives and a Chrysler security personnel there while Mr. Sheridan and his lawyers went through Mr. Sheridan's files?
MR. MILLER: Objection, repetitive.
Q (BY MR. WATTS): Go ahead, sir.
THE WITNESS: Should I answer the question?
MR. MILLER: If you have any different answer, Mr. Ridella.
THE WITNESS: I have nothing more to add.
Q (BY MR. WATTS): Are you going to answer that question?
A I have.
MR. MILLER: Objection, argumentative. He just did. He said he had nothing further to add.
Q (BY MR. WATTS): Well, Mr. Ridella, let me go back, because maybe I missed the answer. I'm not trying to be argumentative with you.

Page 33

I think that we've established the fact that you said it was a prudent thing to do. You would agree with me there, right?
A Those were my words, yes.
Q Yeah. And what I'm trying to figure out is what -- we've beat that dead horse and we all agree it was a prudent thing to do. Now I'm trying to figure out what was the purpose for doing it.
MR. MILLER: Objection, repetitive. You have asked that question at least three times.
Q (BY MR. WATTS): Go ahead, Mr. Ridella.
A Let me say this, Mr. Watts, I don't recall there being any objection to the presence of the Dickinson, Wright lawyers and the security official in the room at the time that Mr. Sheridan was present. They were there to observe. They observed, and when Mr. Sheridan and his lawyers were finished looking at whatever they looked at, they left. The room was locked -- the guard left, the lawyers left and the room was locked, pure and simple.
Q No, I'm not insinuating there was an objection necessarily. I'm just asking you what was the purpose of those people observing.

Page 34

MR. MILLER: Objection, repetitive.
Q (BY MR. WATTS): Go ahead, sir.
THE WITNESS: Should I answer the question?
MR. MILLER: If you have anything further to add.
THE WITNESS: I have nothing more really to add, Mr. Watts.
Q (BY MR. WATTS): So your answer to my question is they were just there because it was prudent?
A That's correct, and to observe.
Q All right. Were you afraid that Mr. Sheridan and his lawyers were going to remove documents from the Sheridan files?
A I can't recall how I felt at the time.
Q Well, was that one of the purposes for having people in the room, to make sure that a removal of documents from the Sheridan files did not occur?
A I don't recall that being discussed or thought about at the time. I must say that the documents did contain Chrysler information as well as some Paul Sheridan effects, and so I think that they were there just to observe and to see -- to see again -- let me say this as well. The purpose --

Page 35

one of the purposes of that review by Sheridan and his lawyers was to determine what was Chrysler's and what was Sheridan's, and to the extent that the attorneys could be of any assistance in that process, they were there for that purpose as well.
Q Well, you told me that one of the purposes of Mr. Sheridan's review was to determine what was Chrysler and what was Sheridan's. I believe you used the exact same words from the standpoint of Mr. Malecki's review and Mr. winters review in early 1995 which was done without your permission and without your knowledge.
Now, my question to you is, can you explain for the jury why in April of 1995 Chrysler felt that it was prudent to have somebody from Chrysler watch Sheridan go through the files but they didn't think it was prudent in early 1995 for Sheridan and somebody from his legal counsel to be present when Chrysler went through the files?
A Well, let me say this, Mr. Watts, I am very confident that Mr. Malecki and Mr. Winter went in there for a very -- a very proper purpose, and they went in there to look at the documents and

Page 36

to make an inventory of what was Sheridan's and what was Chrysler's. They never went back into the room after that event. When Paul Sheridan came with his lawyers in 1995 to review the documents, the purpose was under -- the purpose was really to comply with a -- to give them, I should say, an opportunity to look at the documents and to make a determination of what was Sheridan's and what was Chrysler's.
The latter review by Sheridan and his lawyers was really something that we had invited them to come and do and to attend. They came, and we were there with them when they arrived. I can't really explain to you -- I must say this to you as well, that Mr. Sheridan was not represented at the time of Malecki's review and Winter's review by Mr. Morgan.
Q Mr. Ridella, you are an attorney licensed to practice law in the State of Michigan; is that right?
A I am.
Q You understand that when you give a deposition, you are giving testimony under the penalty of perjury?
A I'm aware of that.

Page 37

Q Correct?
A I am aware.
Q And you just testified that in early 1995, Mr. Sheridan was not represented and that was one of the reasons why his counsel were not permitted to be present during the Malecki/Winter unauthorized, unsupervised review of the documents?
A No, I did not say that. I said that Mr. Sheridan was not represented, to the best of my knowledge, by Mr. Morgan at that time.
Q Well, he had counsel and you knew it because you had already written a letter to his lawyer in 1994?
A I'm aware of that, yes.
Q All right. And so when you said that he was not represented in your first answer, that wasn't right, was it?
A I said by Mr. Morgan. That was my answer.
Q I think that was your clarification after you had been caught.
MR. MILLER: Objection, argumentative.
Q (BY MR. WATTS): Let's get back to the question that was at hand. Can you tell the jury why it was prudent in April of 1995 for Chrysler to

Page 38

employ people to sit there and watch Sheridan's lawyers figure out what was Chrysler and what was Sheridan's, and yet they did not find it prudent to allow Mr. Sheridan and his legal representative to be present when Chrysler employees, Malecki and Winter, went in there without permission and without supervision?
MR. MILLER: Was that a question?
MR. WATTS: Yep.
MR. MILLER: That was the same question that he's already responded to at length; objection, repetitive.
Q (BY MR. WATTS): Go ahead, Mr. Ridella.
A I have nothing more really to add to the -- I have nothing more really to add to the answer, Mr. Watts.
Q Have you ever heard the phrase what's good for the goose is good for the gander?
A I've heard of the phrase, yes.
Q Mr. Ridella, as I understand your testimony, you were the person who is designated by Chrysler to tell the jury that nothing happened to these files between December of '94 and the time that Sheridan finally got to look at them in April of '95; is that right?

Page 39

A I testified, Mr. Watts, that I took control -- took control of the files and access to those files starting in January of '95 through the time that Mr. Sheridan had looked at the files in April of '95 and beyond that date also.
Q All right. You cannot testify as to what happened to the files when Mr. Malecki and Mr. Winter looked through them, correct?
A I can testify as to what I understand that they did.
Q Well, that would be hearsay as opposed to something that you saw with your own eyes; is that right?
A I did not observe them looking at those documents, that is correct.
Q Okay. Now, I want to switch your attention from the concept of paper files to the concept of computer files. Now -- and I want for the next series of questions for you to understand that when I talk about files, I'm talking about computer disks, information on hard disks or hard drives, et cetera. Can we have that understanding, sir?
A Yes.
Q Who was it that took the computer information out

Page 40

of Sheridan's office?
MR. MILLER: By that do you mean the disks when you say computer information?
MR. WATTS: The information that came out of his computer.
THE WITNESS: I remember that in February -- late February of 1995 -- and by this time, let me clarify that Sheridan's computer had also along with his documents been stored in the locked security room at the Auburn Hills Technology Center. There was a need for a computer by a department at the Auburn Hills Technology Center. Mr. Malecki -- Mr. Winter had a need or had Sheridan's computer available. It was available. It was not in storage. And he with my permission had requested an individual named Henri LaFrance to download all the information from Sheridan's computer onto diskettes and that would, therefore, make the computer available for use by another employee.
Q Now, Henri LaFrance -- LaFrance was working on behalf of Chrysler and paid by Chrysler to do this downloading, correct?
A He's a Chrysler employee, yes.
Q And Henri LaFrance is no longer a Chrysler

Page 41

employee; isn't that correct?
A I don't know, sir.
Q Do you know where Mr. LaFrance works?
A Not right now.
Q Have you talked to Mr. LaFrance?
A No, I have not.
Q Has he explained to you what he was asked to do?
A I personally did not talk to him.
Q Are you aware that not all of Sheridan's files were in fact preserved?
A I'm not aware of that at all.
Q Are you aware as to whether Mr. LaFrance deleted computer files and downloaded some others?
A I'm not aware of that at all. I know that Mr. LaFrance was given instructions to download the computer and that his -- I know that his actions are spelled out in some detail in an affidavit that he submitted in connection with his activities.
Q Now, Mr. LaFrance downloaded Sheridan computer data to a Chrysler file server location; isn't that correct?
A I don't know, Mr. Watts.
Q Are you aware that Mr. LaFrance downloaded Chrysler -- strike that.

Page 42

Are you aware that Mr. LaFrance downloaded Sheridan computer files to file server location FSNCTC19? Are you aware of that, sir?
A I don't have that kind of detail at hand.
Q Well, write that number down for me just for a second, FSNCTC19. Do you have that, sir?
MR. MILLER: I have it.
MR. WATTS: All right. Ms. Moore --
COURT REPORTER: Yes.
MR. WATTS: Would you take a piece of paper and write that down and slap exhibit sticker No. 1 on it.
COURT REPORTER: Yes.
(Deposition Exhibit No. 1 marked for identification.)
COURT REPORTER: I did it.
MR. WATTS: Hand exhibit sticker No. 1 to the witness, please.
Q (BY MR. WATTS): Now, Mr. Ridella, I want to talk to you about locations for a second. Mr. Sheridan's office where the files were originally removed from in December of 1994 was at the Chrysler Technical Center in Auburn Hills, Michigan; is that right?
A That is correct.

Page 43

Q And you explained to me that on December the 19th of 1994, his files were removed from the Sheridan office in the CTC to a security location in the CTC; is that right?
A Correct.
Q And in early 1995 when Mr. Malecki and Mr. Winter went through those files, they went through the files at the security location in the Chrysler Technical Center in Auburn Hills, Michigan, correct?
A Correct.
Q Subsequent to the time that Mr. Malecki and Mr. Winter went through the files at the CTC, those files were moved to the Office of General Counsel location, which at the time was at Highland Park, Michigan?
A Correct.
Q And then they were put into a locked office and then -- did the inventory by -- that was authorized by yourself and Mr. Clippert take place at Highland Park or in Auburn Hills?
A The inventorying was a direction from the judge in the Oakland County action, the case of Chrysler vs. Sheridan, and it took place at the Auburn Hills Technology Center.

Page 44

Q Okay. And then after that inventorying, the files were removed from Auburn Hills to Highland Park, the Office of General Counsel?
A That is correct.
Q Okay. Now, let's go back to the computer files for a second. Mr. Henri LaFrance was asked to download Sheridan computer data and I will represent to you that he did so to file server location FSNCTC19. With your understanding of Chrysler's computer situation, FSNCTC19 would be a file server location in what place?
A I would not know that, sir.
Q Well, do you see how it says CTC19?
A I see that.
Q CTC is the same initials as Chrysler Technical Center; is that correct?
A CTC has stood in my mind as the Chrysler Technology Center, yes, for a number of different reasons.
Q Okay. That's in Auburn Hills, Michigan; is that right?
A That's correct.
Q And so Mr. Henri LaFrance who no longer works for Chrysler was asked to download computer files to a file server location in Auburn Hills, Michigan,

Page 45

correct?
A First of all, I don't know where Mr. LaFrance works, if he's working for Chrysler or not right now, but he was given direction to download the computer.
Q Mr. LaFrance is not working for Chrysler. He works in Ohio now.
Did you ever have any discussions with Mr. LaFrance, ever?
A Personally, no.
Q Okay. Now, who are you aware of that had discussions with Mr. LaFrance?
A I can't recall, Mr. Watts.
Q You can't tell the jury who it was that instructed Mr. LaFrance to download these files?
A I can say that Mr. Winter was involved in asking Mr. LaFrance or arranging for Mr. LaFrance to download the computer. I don't recall if Mr. Winter in fact spoke with him directly but I do know that the downloading occurred. Mr. Winter had asked me for permission for this to occur and I gave it to him -- gave that permission to him and the downloading occurred by Mr. LaFrance.
Mr. LaFrance did his work and I know that he prepared an affidavit detailing his

Page 46

downloading work in connection with establishing a chain of custody of all the Sheridan -- all the records that were once in the Sheridan work space.
Q I appreciate that answer but I need to object to it as being nonresponsive.
The specific question and then I'll get to the rest of it is, do you know who it was that told Mr. LaFrance to download the Sheridan files?
A I can't recall with specificity, Mr. Watts.
Q All right. Do you know when Mr. LaFrance, a Chrysler employee, downloaded the Sheridan files?
A Mr. LaFrance downloaded the records from the computer that was used by Mr. Sheridan sometime in late February of '95.
Q In late February of 1995, when Mr. LaFrance was downloading files off of Mr. Sheridan's computer, was anybody by way of legal counsel or other representation for Mr. Sheridan invited to observe as a prudent thing to do?
A I don't recall anybody from the Legal Department being present when the downloading occurred or Mr. Sheridan or Mr. Sheridan's lawyers being present when the downloading occurred.

Page 47

Q Now, when Mr. Winter came to you and asked for your permission to download Sheridan's files, did you call up Mr. Morgan or anybody else in Sheridan's legal representation team to seek permission to go into his files?
A We did not contact Mr. Morgan or any of his lawyers for the purpose of observing the downloading.
Q So as I understand it, neither Mr. Sheridan, Mr. Pitts, Mr. Morgan, Mr. Mazur or any other Sheridan representative was even informed of the fact that a Chrysler employee was instructing another Chrysler employee to download Mr. Sheridan's files off of his computer; is that correct?
A What's the question again, Mr. Watts? Please repeat that question.
MR. WATTS: Ms. Moore, could you read that question back for the witness, please.
COURT REPORTER: Yes.
(Record read as follows:
"Q So as I understand it, neither Mr. Sheridan, Mr. Pitts, Mr. Morgan, Mr. Mazur or any other Sheridan representative was

Page 48

even informed of the fact that a Chrysler employee was instructing another Chrysler employee to download Mr. Sheridan's files off of his computer; is that correct?")
THE WITNESS: I can't recall, Mr. Watts, if we informed them or not.
Q (BY MR. WATTS): Do you have any letters?
A At the time we were represented by the Dickinson, Wright law firm and our attorneys are Mr. Kienbaum, Mr. Brown and Mr. Hamilton, Mr. Clippert. I can't recall if they had to prepare any letters or not, informing Mr. Morgan or Mr. Mazur of the downloading that was occurring.
Q Mr. Ridella, are you familiar with the fact that the Dickinson, Wright law firm has also been involved in defending Chrysler in product liability litigation?
A I'm aware of that, yes.
Q And are you familiar with the fact that the Dickinson, Wright law firm had defended Chrysler previously in product liability litigation alleging that the Chrysler minivan liftgate latch was defective?

Page 49

A I wasn't aware of that.
Q Okay. Now, was Mr. LaFrance asked to create an inventory of the files that he was downloading?
A I can't recall, Mr. Watts, that detail.
Q Mr. Ridella, do you recall ever having seen an inventory that was created for the computer files that were downloaded off of Mr. Sheridan's computer?
A I can't recall.
Q Mr. Ridella, can you tell me whether or not prior to the time that Mr. LaFrance began the computer transfer procedure, whether he took an inventory of the files that were presently on the hard drive or on the disks of Mr. Sheridan's computer?
A I can't recall, Mr. Watts.
Q All right. So as I understand your testimony, you are not familiar with the fact of whether an inventory was done before the downloading and whether an inventory was done after the downloading; is that correct?
A I have no present recollection of it. I can't recall.
Q Okay. Are you familiar with a gentleman by the name of Rick Wilhelm?
A I am.

Page 50

Q Can you tell the jury whether Mr. Wilhelm had ever been granted access to Mr. Sheridan's computer files?
A I don't know, Mr. Watts. I can't recall.
Q Are you familiar with the fact that during Mr. Sheridan's deposition in the Baird vs. Chrysler case, that Mr. Wilhelm presented a document that was purportedly off of the Sheridan computer files?
A I'm not aware of what Mr. Wilhelm had done in that trial.
Q Can you tell the members of the jury whether you are aware of whom has had access to the Sheridan computer files since Mr. LaFrance got done with his procedure?
A I remember that Mr. LaFrance completed his work and that the downloaded files that he had created were placed in storage in the locked security room at the Auburn Hills Technology Center and stored there. I'm not aware of any access to those files thereafter.
Q Well, can you tell the jury that nobody from the Dickinson, Wright firm or no one else at Chrysler has ever touched the Sheridan computer files since Mr. LaFrance downloaded them?

Page 51

A Well, I can say that I personally was not aware of anybody doing that. If it occurred, I was not aware of it.
Q Well, who would be aware of whether or not that occurred?
A Well, I guess if you're saying Mr. Wilhelm had the files, I guess he could tell you that.
Q Well, as the witness that's been presented to talk about the sanctity of these files, do you have any knowledge one way or the other as to whether somebody has touched those files?
A Mr. Watts, I can tell you this -- well, anything is possible. I can tell you that we put in place security measures with regard to those documents and we did control the access and I'm relatively certain that given those measures we put in place, that they were very effective.
Q Well, let's follow up on that last question or that last answer. The security measures you took in place were after the general manager of Minivan Operations and his subordinate, Mr. Malecki, went into the files without your permission and without your knowledge, correct?
A That is correct.
Q And the security measures that you put into place do not include an entrance and exit log into the locked cabinet at the Office of General Counsel in Highland Park, Michigan, correct?
A I do not have a log that I can recall having. I don't recall having a log, yes.
Q And the security measures that you put in place do not include videotaping each time somebody had access to the Sheridan documents, correct?
A I don't recall there being videotapes, right.
Q And the security measures you put into place do not include an inventory of the computer file before Mr. LaFrance did the downloading, correct?
A As I said, I didn't recall seeing a log of those computer -- of those downloaded computer files.
Q And the security measures that you put into place do not include an inventory of the downloaded files after Mr. LaFrance continued with his procedure?
A I don't recall seeing an inventory.
Q And the security measures that you put into place do not allow you to tell this jury that Mr. Wilhelm did or did not access the computer files, correct?
A I don't know what Mr. Wilhelm had done with those records. I don't know -- I have no knowledge

Page 52

Page 53

regarding those events.
MR. MILLER: Is this a good time for a break?
MR. WATTS: I'm almost done. If you want to take a break, of course you can call a break whenever you want.
MR. MILLER: I need to. I will not go into detail.
MR. WATTS: Judging by our experience together, Mr. Miller, if you say you need to, I think I understand what that means. Let's take a break.
MR. MILLER: Thank you very much.
MR. WATTS: Do you want me to call you back in about ten minutes or what?
MR. MILLER: That would be great.
MR. WATTS: Okay. Same number?
MR. MILLER: Yes.
MR. WATTS: Why don't you give that number just to make sure I've got the right one.
MR. MILLER: It's 267-8500, I believe, but let me make sure. I go to so many offices. It's (810) 267-8500.
MR. WATTS: I'll call you guys back in ten minutes.

Page 54

MR. MILLER: Very well. Thank you.
VIDEO TECHNICIAN: Going off the record at 10:20 a.m.
(Off the record.)
VIDEO TECHNICIAN: We're back on the record at 10:42 a.m.
Q (BY MR. WATTS): Mr. Ridella, do you have the inventory that was created as a result of the late February, early March procedure that you described for us?
A It's not in my possession right now.
Q You do not?
A No, I don't.
Q I'm sorry, sir, I missed part of your answer. It cut out.
A I do not, Mr. Watts.
Q Okay, thank you. Now, subsequent to the time that this inventory was made, Chrysler received correspondence from Mr. Sheridan's counsel, Mr. Courtney Morgan, wherein it was alleged that the inventory failed to list certain items and did not contain files that had been in there before; isn't that correct?
A That is correct.
Q In fact -- well, by way of background, can you

Page 55

tell me who Mr. Thomas Kienbaum is, or Kienbaum?
A Mr. Thomas Kienbaum is our lead counsel, Chrysler's lead counsel in the case of Chrysler vs. Sheridan.
Q All right. And Chrysler's lead counsel in the case of Chrysler vs. Sheridan received a letter from Mr. Sheridan's attorney, Courtney Morgan, on July the 14th of 1995, which was copied to a Mr. George Googasian or Googasian, G-o-o-g-a-s-i-a-n. Can you tell the jury who George Googasian is?
A George Googasian was appointed by Judge Sosnick, Edward Sosnick of the Oakland County Circuit Court here in Michigan to be the special discovery master and make recommendations to resolve certain discovery disputes that would arise between Chrysler and Sheridan in the Chrysler vs. Sheridan litigation.
Q All right. And you recall shortly after Mr. Kienbaum received this letter from Mr. Morgan, being in discussions where these allegations that documents had been taken out and were not properly inventoried were made?
A I have a recollection that Mr. Morgan had so -- had written a letter to Mr. Kienbaum to that effect, yes.

Page 56

Q All right. Now, Mr. Ridella, that letter is being faxed to you so that it can be an attached as an exhibit to the deposition, and it's a letter from Mr. Morgan to Mr. Kienbaum dated July 14, 1995, copying Mr. Googasian. And I want to ask you about your recollections concerning this.
In July of 1995, were you made aware that Mr. Sheridan's lawyers specifically alleged that Chrysler's inventory failed to list and does not contain the liftgate latch general file?
MR. MILLER: Do you want to wait until the letter is here so we can see that?
MR. WATTS: Well, really what I want to find out is whether he recalls that first.
THE WITNESS: I can't recall the specifics of that letter, Mr. Watts.
Q (BY MR. WATTS): Okay. Do you recall that the letter specifically alleged that Chrysler's inventory did not list the liftgate latch competitive file?
A Mr. Watts, I'm aware that the letter made reference that -- that the inventory did not contain certain items, did not -- did not list certain items but, again, I can't recall the specific details of what they -- what Mr. Morgan

Page 57

claimed was not present in the inventory.
Q Okay. I'll represent to you that in addition to claiming that the liftgate latch general and the liftgate latch competitive files were gone, that Safety Leadership Team meeting minutes were gone, Safety Leadership Team preliminary file was gone, litigate latch Safety Office file was gone, the H.G. Cook study was gone, FMVSS 206 general was gone, seat back strength general was gone, seat back strength FMVSS 207 specifications was gone, offset impact general is gone, rear crash survivability general is gone, FMVSS 301 is gone, side crashworthiness issues file is gone, FMVSS 214 is gone, bumper issues general is gone, S -- or NS-body bumper file is gone, tail lamp studies by Zarowitz is gone, amber tail lamp NS-body is gone, rear seat headrest general and Zarowitz is gone, back-up light general is gone.
Now --
MR. MILLER: Counsel, in regard to that, while I haven't seen the letter, you're simply saying that those are not in the inventory provided by Chrysler as opposed to they are not among the documents. Am I correct in that?
MR. WATTS: Well, what I'm saying is

Page 58

that these matters are contained in a letter by Mr. Morgan.
MR. MILLER: Well, let's be fair, Mikal. That letter says that those documents are not gone; it just notes that they are not listed in the inventory. That's a big difference. I think you ought to be fair in your characterization.
MR. WATTS: Well, if you let me finish my question, we can go ahead and clarify things and get to it.
MR. MILLER: Well, you had already characterized in that long litany gone, gone, gone and that's not what that says.
MR. WATTS: Ms. Moore, unless we're going to swear in Mr. Miller, I'm going to proceed with my next question to the witness.
MR. MILLER: You should do that.
Q (BY MR. WATTS): Mr. Witness, as opposed to Mr. Counsel, did the inventory contain a reference to the liftgate latch general file?
A I can't recall -- Mr. Watts, I don't have the inventory in front of me. I don't know what it contains at this time.
Q Do you know whether the inventory contained

Page 59

references to anything dealing with liftgate latches?
A Well, let me -- if could clarify for you, the inventory was meant to be a description of what generally was found in the files of Mr. Sheridan, and to that extent, it's simply a recording of what the -- what the inventory people had found. Again, it was not meant to go into each and every document in the Sheridan records, but to be a broad brush general description of what they had located.
MR. WATTS: Objection, nonresponsive.
Q (BY MR. WATTS): Do you know whether the inventory listed anything dealing with liftgate latches?
A I can't recall, Mr. Watts.
Q Do you recall a minute ago Mr. Miller interrupting the deposition with a speech about how none of those documents are gone; they are simply not listed in the inventory? Do you recall that?
A Yes, I do.
Q And can you tell the members of the jury whether all the documents that I referenced concerning liftgate latches are in fact still in the

Page 60

Sheridan documents?
A Well, Mr. Watts, I personally cannot answer that question.
Q Okay. Well, the reason I'm curious is that Mr. Miller spent money for Ms. Moore to transcribe his long soliloquy about gone versus not in the inventory and yet yesterday he assured me that there were no liftgate latch documents in the Sheridan files. Do you know whether there are any liftgate latch documents in the Sheridan files?
A I have not personally been through Mr. Sheridan's files.
Q So with regard to this issue as to whether documents are gone -- with regard to this issue as to whether the documents are gone or whether they were simply failed to be listed in the inventory, you can't help us about that one way or the other concerning liftgate latch files; is that right?
A All I can say is I'm aware of -- that the inventory was prepared and that I cannot -- I cannot tell you, because I've not been through the documents myself, what is in there and what is not in there specifically.

Page 61

Q Okay. Mr. Ridella, when did you first learn that you were going to be identified as a witness in the Matthews vs. Chrysler trial that's going to take place next week beginning November 18th, 1996?
A Rough guess, about two weeks ago.
Q And who informed you of that fact?
A It was either Rita Burns or one of her paralegals.
Q Did you have a discussion with Miss Rita Burns or one of her paralegals in preparation for your deposition?
A Yes, I did.
Q Did you meet with Mr. Miller in preparation for this deposition?
A Yes, I did.
Q How long did you meet with them in preparation for the deposition?
A I would say about three or four hours.
Q What was discussed?
MR. MILLER: Objection, instruct the witness not to answer on the basis of the attorney-client privilege.
Q (BY MR. WATTS): Are you going to answer the question, Mr. Ridella, or are you going to follow

Page 62

the advice of your counsel?
A I'm going to follow the advice of my counsel.
MR. WATTS: Certify the question, Ms. Moore.
Q (BY MR. WATTS): Mr. Ridella, what is your salary at Chrysler Corporation?
MR. MILLER: Objection. How is that relevant, counsel?
MR. WATTS: Goes to his credibility.
THE WITNESS: My base salary is approximately $130,000 a year.
Q (BY MR. WATTS): And in addition to your base salary, what was your total compensation package in 1995, last year?
A You mean the value of it, sir?
Q Yes, sir.
A I received a bonus last year of $81,000, and I receive an employee benefits package of health care, group insurance, pension, and a company car.
Q All right, sir. Mr. Ridella, when you were informed that you were going to be a witness in the Matthews vs. Chrysler case which begins trial on November 18th of 1996, were you informed that it was a case that was filed down in Texas?

Page 63

A Yes, I was.
Q And have you ever been to Texas, sir?
A Yes, I have.
Q Okay. Have you been informed that you may be called as a witness at the time of the trial of this case?
A Yes, I was.
Q And I want to represent to you that all indications are that this trial will last between two and a half, three, three and a half weeks which would put us from November the 18th sometime into the middle of December. Do you have anything that would prevent you from testifying live at the time of trial in Palestine, Texas, when this case is tried?
A I have no conflicts.
Q All right. And so we can expect to see you there.
MR. MILLER: Obviously, counsel, that will be a decision made by Chrysler's counsel.
MR. WATTS: Mr. Ridella, I appreciate you doing this deposition by phone and I very much look forward to meeting you in Palestine in the next three or four weeks, sir.
I think that's all my questions with

Page 64

the qualifier that when the letter gets there -- and Ms. Moore, it is a letter as I've described on the record, dated July 14, 1995, from Courtney Morgan to Thomas Kienbaum, copy with George Googasian -- I would like that marked as Exhibit No. 2 to Mr. Ridella's deposition.
COURT REPORTER: Okay.
MR. WATTS: And with that clarification, I believe I am finished. I pass the witness.
MR. MILLER: I do have some questions.
EXAMINATION
BY MR. MILLER:
Q Mr. Ridella, would you explain for the jury your education beyond the high school level.
A Yes. I have a bachelor of arts degree from the University of Michigan, and a law degree from Wayne State University Law School in Detroit.
Q And when did you receive your law degree?
A In 1978.
Q And in regard to your legal employment, would you describe for the jury your employment since graduation from law school.
A Yes, I worked for a law firm in Detroit, the Professional Legal Centers firm, and from 1978

Page 65

until 1979. After that I worked approximately one year for a law firm in Southfield, Michigan, by the name of Canard, Kevlin and Van Houten (phonetic), and then after that, I began my employment at Chrysler. That was in 1980.
MR. WATTS: Which year? I'm sorry, I didn't hear that.
THE WITNESS: 1980.
MR. WATTS: Thank you, sir.
Q (BY MR. MILLER): And would you describe for the record the general areas that you've been responsible for within Chrysler since 1980.
A All of my career at Chrysler I've been involved in issues concerning employment law, employee benefits law and matters concerning personnel and labor law in general. I also manage outside counsel in litigation that occurs both within Michigan and outstate.
Q Now, Mr. Ridella, you've already testified in response to Mr. Watts' examination that you did become aware of certain employment issues relating to Mr. Paul Sheridan in the fall of 1994; is that correct?
A That is correct.
Q And without disclosing in any of your subsequent

Page 66

answers any attorney-client privilege information or work product information, or information which is being protected by any court order in any litigation involving Mr. Sheridan, would you identify the issues associated with Mr. Sheridan's employment status in December of 1994?
MR. WATTS: Excuse me, I need to make an objection. The objection is -- is that I object to this witness being asked to expose whatever parts of the issue he wishes to expose and then put the raincoat over the embarrassing parts that may be covered by attorney-client privilege. This is a use of the privilege as a sword as opposed to a shield which is not permitted under Texas law. We hereby would request the witness to disclose in answer to this question all information that he has, including attorney-client information; otherwise, we will be forced to take the matter before the court.
Thank you.
Q (BY MR. MILLER): Again, Mr. Ridella, without disclosing any attorney-client or work product or other confidential information protected by court order in the Sheridan litigation, would you relate the issues that related to Mr. Sheridan's

Page 67

employment that are in fact disclosed in the pleadings associated with any litigation between Chrysler and Mr. Sheridan.
A. Yes. Paul Sheridan was identified by our security department as an individual who had disclosed confidential information during the course of his employment. That information was brought to the attention of the personnel department in December of 1994, and the personnel department, Mr. Smuts in particular, had asked of me to attend a meeting to discuss the fact finding and detail, and provide my legal evaluation, and following that meeting in December of 1994, Mr. Sheridan was discharged from employment.
MR. WATTS: I'm going to object to the last response as containing matters that could only be known to this witness by hearsay. Mr. Miller, for purposes of shortening the transcript, may I have -- I mean, do we have the understanding that objections to hearsay are reserved pursuant to the rules?
MR. MILLER: Yes.
MR. WATTS: Okay, fair enough. Go ahead, sir.

Page 68

Q. (BY MR. MILLER): And specifically, Mr. Ridella, what information was made available from Mr. Sheridan to Chrysler associated with either his suspension or termination in regard to disclosure of any confidential or trade secret information?
A. Mr. Sheridan had admitted to our security investigators that he was the source of the leak of confidential information.
Q. Now, Mr. Watts has asked you a number of questions regarding the possession of the files maintained by Mr. Sheridan, but I want the record to be clear in regard to those facts. Were all of the files, both hard copy paper documents and the computer utilized by Mr. Sheridan placed in the security room that you described?
A. Yes. I'm informed that, yes, all those -- all that information was placed in the locked security room at the Auburn Hills Technology Center.
Q. And was all of that information as we've described it placed in this security room on or about December 19, 1994?
A. That is correct.
Q. And would you describe again the location of this room, whether or not it was locked and who had

Page 69

access to it.
A. The room is located in the rear end of the security department at the Auburn Hills Technology Center. It is a storage room. It is a locked facility. And the documents were placed in there and keys were maintained by the security manager, Brian Bradley, and access to the room with the key could only be used by Bradley and his supervisors.
Q. Now, subsequent to placing the documents in this secured area, was Mr. Sheridan terminated?
A. Yes.
Q. And either at the time of Mr. Sheridan's suspension or at the time of his termination, were you aware of any information regarding the minivan liftgate latch that played any role in his suspension or termination?
A. I was aware of none.
Q. Now, subsequently to Mr. Sheridan's termination, did litigation develop between Chrysler and Mr. Sheridan?
A. Chrysler filed a lawsuit against Mr. Sheridan in the Oakland County Circuit Court on December the 27th, 1994. That action was filed by Chrysler, again, in the Oakland County Circuit Court and

Page 70

continues to pend as of the present moment.
Q. And, again, based on the pleadings in that litigation, what is the primary purpose or relief being sought by Chrysler?
A. Chrysler seeks injunctive relief against Mr. Sheridan and damages against him as well for his disclosures.
Q. Mr. Ridella, would you state for the jury when it was the first time that you became aware that Mr. Sheridan was making any statements or claims regarding the minivan liftgate latch.
A. The first time that I'm aware of the claims about the minivan latch were in connection with a pleading filed by his lawyer, Courtney Morgan, in early February of 1995. Reference was made in his answer to the minivan liftgate latch.
Q. Now, during Mr. Watts' examination of you, he inquired about the visit made by Mr. Dennis Malecki and Richard Winter to this secured area. Do you recall that generally?
A. Yes, I do.
MR. MILLER: I'm going to ask the court reporter to mark as Exhibits 3 and 4 the affidavit of Dennis Malecki, filed in the Circuit Court for the County of Oakland, in the matter

Page 71

captioned Chrysler Corporation vs. Paul Sheridan, and the next exhibit is that of the affidavit of Richard Winter, filed in that same proceeding.
(Deposition Exhibit Nos. 3 and 4 marked for identification.)
MR. WATTS: Just so it's clear, we object to the entry of both of those documents on the ground of hearsay.
Q. (BY MR. MILLER): Mr. Ridella, turning your attention to paragraph four, first, of Exhibit4 (sic), that is, the affidavit of Mr. Malecki, and would you read for the jury all of the content of paragraph four of Mr. Malecki.
A. Yes, paragraph four, "In the boxes I came across a large number of the 'sender's copy' of Federal Express air bills prestamped with Chrysler's account number. I removed the Federal Express air bills from the boxes and thereafter gave them to Mr. Fonger. Although I reorganized the contents of some boxes into other boxes, except for the Federal Express air bills, which I gave to Mr. Fonger, I removed nothing from the UPS room or the boxes."
Q. And directing your attention to Exhibit No. 4, the affidavit of Mr. Winter, and again, at

Page 72

paragraph four, would you read for the jury the sworn statement of Mr. Winter.
A. Paragraph four, "In the boxes I came across a large number of the 'sender's copy' of Federal Express air bills prestamped with Chrysler's account number. I removed the Federal Express air bills from the boxes and thereafter gave them to Mr. Fonger. I removed nothing else from the UPS room or the boxes. I have had no contact with the boxes in the UPC room since January 3, 1995."
Q. Mr. Ridella, what was the interest in the Federal Express air bills described in both of these gentlemen's sworn statements?
A. The purpose of those air bills was -- they were given to Mr. Fonger for review as part of his continuing investigation of what other information Mr. Sheridan may have disclosed to other parties, other information being other Chrysler confidential information.
Q. And subsequently have you been advised that those Federal Express air bills have been returned to the file collection maintained by Mr. Sheridan?
A. Yes.
Q. Mr. Ridella, from the time of Mr. Sheridan's

Page 73

termination up until February or March of 1995, where were the files maintained by Mr. Sheridan secured?
A. They were secured in the locked storage room at the Chrysler security department in Auburn Hills, Michigan.
Q. And during that entire time, state whether or not those documents were available only at your direction or to supervisory personnel.
A. Beginning with -- beginning in early January of 1996 -- 1995, those documents or access to those documents could not and were not accessible except through me.
Q. Now, as a part of the litigation between Chrysler and Mr. Sheridan, you've already described that an inventory was conducted. I just want the jury to understand. State whether or not that inventory was conducted at the direction of the court.
A. Yes, it was.
Q. And what role did you play with respect to performing the inventory directed by the court?
A. There was a hearing before Judge Sosnick on March 1st, 1995 at which time the court indicated that it wanted to have an inventory conducted of the

Page 74

documents. We began that inventory. I was responsible for coordinating it with Mr. Charles Clippert of the Dickinson, Wright law firm. We chose the individuals who would actually be doing the inventory. As I mentioned, those individuals were Catherine Moran, Charles Murphy and Sharon Vasher.
They completed the inventory and Mr. Clippert and I assisted in the compilation of the inventory to get it ready for filing with the court.
Q. And was it filed with the court?
A. I recall that it was provided to Mr. Morgan, attorney for Mr. Sheridan, and I believe to the discovery master, Mr. Googasian. I don't recall at this time if we actually filed it with the court. It might have been.
Q. Now, did it also come to pass that the court directed that the files maintained by Mr. Sheridan be moved from the Chrysler Technology Center to another location?
A. Yes. Following the court's March 1st hearing, an order was entered on March the 15th and one of the requirements of that order was that the files be moved to a location in Highland Park,

Page 75

Michigan. The move was actually accomplished in compliance with the court order at the end of March, 1995.
Q. And the new location was at the Highland Park offices that you've described previously of the Office of General Counsel for Chrysler Corporation?
A. That is right. I secured a -- an empty room in our offices at the Office of General Counsel, and the documents were placed there.
Q. And could you summarize for the jury what steps were taken with respect to the transfer of the files maintained by Mr. Sheridan from Chrysler Technology Center to the Office of General Counsel in Highland Park.
A. Yes. I had organized the move to occur by two movers, two individuals. The movers arrived at the CTC security offices and were greeted there by Mr. Aubrey Stamps, a security guard working at the -- working in the security office at the Auburn Hills Technology Center.
Mr. Stamps was directed by me to observe the loading of the boxes from the security storage room into a truck and to accompany the movers to my offices in Highland

Page 76

Park, Michigan, for the move.
The individuals arrived at my offices with the boxes and I observed them moving the boxes from the truck to the room at our facilities where they were stored.
Q. And am I correct in understanding that once they were stored at Highland Park, they were under lock and key under your control?
A. Yes. At the time that the boxes were being moved from the truck to the room, I contacted a security official at the Highland Park security office to come over and put a new lock on the door of the room in which the boxes were being stored, and that individual finished his work about the same time that the boxes had been unloaded. He then supplied me a key, the only key to the room, and I locked the door behind him.
Q. Now, at any point in time associated with the taking of the inventory of the documents or the continued care and custody by Chrysler of those documents, or their removal to the Office of General Counsel, did the court ever order that any log be kept as to who was looking at these documents?

Page 77

A. No.
Q. Did the court ever order that any videotaping be done as to who was reviewing or had access to these documents?
A. No.
Q. Did the court subsequently permit Mr. Sheridan and his attorneys to actually physically review the documents which had been maintained by Mr. Sheridan as a Chrysler employee?
A. Yes.
Q. And when did that take place?
A. Mr. Sheridan and his lawyers reviewed the documents to the best of my recollection on three occasions in April of 1995.
Q. And I think you've already testified that there were representatives in terms of lawyers and a security person for Chrysler who were present during Mr. Sheridan's and his attorneys' review of those files?
A. Yes. One or all of the individuals I mentioned were present at the time.
Q. Now, subsequent to Mr. Sheridan and his attorneys reviewing the files that had been maintained by Mr. Sheridan as a Chrysler employee, did any of Mr. Sheridan's counsel ever provide a description

Page 78

of what they had actually done as a part of that review of the Sheridan files in April of 1995?
A. You mean provide us a listing of what they had in fact looked at?
Q. First, did they provide any kind of listing, yes.
A. Not that I know of, no.
Q. And secondly, did any of Mr. Sheridan's attorneys ever make any representations to the court or the special discovery hearing master with respect to what had been done by Mr. Sheridan and his attorneys in reviewing the files maintained by Mr. Sheridan?
A. Yes, they did.
Q. And approximately when did that happen?
A. Approximately July of 1995. That's when that occurred.
Q. And did you receive -- were you there at that time?
A. I was not present.
Q. And did you receive any information from Chrysler's counsel involved in the Sheridan litigation as to what description had been provided by Mr. Sheridan's counsel regarding what Mr. Sheridan and his counsel had reviewed in the Sheridan files in April?

Page 79

A Yes.
MR. MILLER: I'd ask the court reporter to mark as next in line the partial transcript of the deposition of Paul Sheridan in the Chrysler Corporation vs. Paul Sheridan matter, dated July 26, 1995, and as the next in line an enlarged, in terms of type, portion of that transcript, pages 25 through 28.
(Deposition Exhibit Nos. 5 and 6 marked for identification.)
Q (BY MR. MILLER): Showing you now, Mr. Ridella, what's been marked as Exhibit No. 6 to your deposition, and direct your attention to, first, page 25, line 8 and line 9, would you read for the jury those two sentences as made by Mr. Sheridan's counsel, Mr. Morgan.
A Yes, beginning at line 8, "We have been through more than three boxes, Mr. Kienbaum. It's been 11 boxes."
Q Now, Mr. Ridella, to your knowledge, approximately how many boxes of documents constitute the files maintained by Mr. Paul Sheridan as a Chrysler employee?
A There are approximately 25 boxes.
Q Now, you've already identified that Mr. Googasian

Page 80

was the special discovery master, is he not, in the Chrysler vs. Sheridan litigation?
A Yes, he was at the time.
Q And we'll get to that in a moment in terms of Mr. Googasian. Again, at page 25, at lines -- starting at line 24, would you read through page 26 of the transcript through line 10, please, for the jury. And again, is this Mr. Morgan speaking?
A It is. "Now, as long as you have indicated, Mr. Googasian, that we should redouble our efforts to get through the rest of those 25 boxes to get to the bottom of the issue of whether or not items have been added or removed, as our letter indicates, our access to those documents, those boxes was focused upon identifying those items which belonged to Mr. Sheridan that may have been in there, and I think Mr. Hamilton, who has been present for some of those discussions when we have been going over the boxes, will attest to that. That is what we have been doing."
Q Now, Mr. Ridella, Mr. Morgan continues on page 26 and I'd like you to read his statements from line 11 through line 20 on page 26.
A "We have pointed out, yes, that that's yours and

Page 81

this is ours. Some things that have been in dispute we said, look, you keep it, and the boxes have had pieces of papers in them and stuff put back in the box, here's the Chrysler side and here's the Sheridan side. That has been done, the point being that's been the focus of the inquiry. The focus of the inquiry has been what belongs as to Sheridan, what belongs to Chrysler, not what has been added and what has been subtracted."
Q Now, over the page, Mr. Ridella, on page 27, the special discovery master, Mr. Googasian, is commenting upon the statements made by Mr. Morgan, and would you read for the jury on page 27, lines 17 through 23, please.
A "As Mr. Morgan indicates, he has not gone through all 25 boxes. He can say and is not saying he has gone through all 25 boxes. So there is no accusation quote-unquote on the table. I think Mr. Kienbaum's response is if you haven't gone through the documents, don't accuse us of having added or subtracted. I'm saying it's not as an accusation; it's a statement."
Q Thank you. Mr. Ridella, subsequent to the date of the proceeding on July 26, 1995 that you've

Page 82

just read portions of, have Mr. Sheridan or his attorneys or any other representative reviewed the approximately 25 boxes of files maintained by Mr. Sheridan?
A No, they have not.
Q Now, at some point in time have the documents maintained by Mr. Sheridan been moved from the Office of General Counsel?
A Yes, they have.
Q And where have they been moved to?
A They were moved in April of this year to the Dickinson, Wright law offices in Troy, Michigan.
Q And have they been maintained by the Dickinson, Wright firm since the time of their transfer until this date?
A That is correct. They were moved because Chrysler moved its world headquarters from Highland Park, Michigan, to Auburn Hills, Michigan. That included our Legal Staff offices, so we had to make provision for the moving of those records to a location and they were so moved to the Troy offices of the Dickinson, Wright, firm.
Q And what steps were taken to maintain the security integrity of the files when they were

Page 83

moved from the Office of General Counsel to the offices of Dickinson, Wright?
A I obtained the service of a representative from the Dickinson, Wright offices in Detroit, and got one of my own support staff people to move the documents into a -- either two cars or one vehicle, and to move those documents -- transport those documents directly to a storage room that had been set aside for the documents at the Dickinson, Wright Troy offices. I had arranged for that move.
Q And have those files been maintained in a locked area at the Dickinson, Wright firm since that time?
A Yes.
Q Mr. Ridella, have any of the documents among the files maintained by Mr. Sheridan, to any knowledge that you have, been destroyed since Chrysler took possession of them on December 19, 1994?
A Categorically, no.
Q And have you ever directed that any documents in the files maintained by Mr. Sheridan be removed and not replaced?
A I have not.

Page 84

Q Are you aware of any other person who has ever directed that any document be removed and not replaced among the files that were maintained by Mr. Sheridan?
A I'm aware of none.
Q Mr. Ridella, do you have any information of any kind that any documents in the files maintained by Mr. Sheridan have been removed and not replaced?
A I have none.
Q Mr. Ridella, do you have any reason to believe that any documents among the files maintained by Mr. Sheridan have been removed and not replaced?
A I have none.
MR. MILLER: I have nothing further.
EXAMINATION
BY MR. WATTS:
Q Mr. Ridella, do you have any reason to believe that Chrysler has destroyed crash tests concerning the Chrysler minivan during litigation pending against the minivan?
MR. MILLER: Objection, beyond the scope of examination, also lacks foundation, counsel, in regard to this witness's knowledge about crash tests.

Page 85

Q (BY MR. WATTS): Go ahead, sir.
A I have no such knowledge, Mr. Watts.
Q Do you have any reason to believe that parts of the Safety Office file relating to the NHTSA defect investigation on the Chrysler minivan liftgate latch have been destroyed?
MR. MILLER: Same objections.
Q (BY MR. WATTS): Go ahead, sir.
A I have no reason to believe, because I'm not even -- I'm not part of that process.
Q Do you have any reason to believe that meeting minutes among the engineers that design the Chrysler minivan liftgate latch have been destroyed?
MR. MILLER: Same objections.
THE WITNESS: I have no reason to believe that.
Q (BY MR. WATTS): Do you know where they are?
A No, I don't.
Q Okay. If you find them, you let me know, okay?
MR. MILLER: Same objections.
Q (BY MR. WATTS): Mr. Ridella, do you receive the Wall Street Journal?
A No, I do not.
Q Okay. Well, keep an eye out for it in December,

Page 86

okay?
MR. WATTS: That's all my questions.
MR. MILLER: Thank you. I have nothing further. The witness will read and sign his deposition transcript.
VIDEO TECHNICIAN: This deposition is concluded at 11:23 a.m.
(Deposition concluded at or about 11:23 a.m.)
(Deposition Exhibit No. 2 marked for identification.

Page 87

FURTHER DEPONENT SAYETH NOT:

Gregory J. Ridella

Subscribed and sworn to before me this ___day of _____, 19
Notary Public, _____ County
My Commission expires:
_____, 19___.

Page 88

STATE OF MICHIGAN }ss
COUNTY OF MACOMB)

I, Melinda S. Moore, (CSR-2258), a Notary Public commissioned and qualified in and for the State of Michigan, do hereby certify there came before me on the date and at the location hereinbefore mentioned, the following named person, to wit: GREGORY J. RIDELLA, who was by me sworn to testify truthfully concerning the matters in controversy in this cause; that he was carefully examined upon his oath and his examination was reduced to typewritten form under my supervision; that the deposition is a true record of the testimony given by the witness.

I further certify that I am neither attorney or counsel for, nor related to or employed by any of the parties to the action in which this deposition is taken; further, that I am not a relative or employee of any attorney or counsel employed by the parties hereto or financially interested in the action.

IN WITNESS WHEREOF, I have hereunto set my hand and affixed my Notarial Seal this 12th day of November, 1996.

Melinda S. Moore, Notary Public
Macomb County, Michigan
My Commission Expires: 9-6-2000

-$-

$130,000 [1] 62:11
$81,000 [1] 62:17

-&-

& [6] 2:9 2:13 4:8 6:8 6:12 9:8

-'-

'94 [1] 38:23
'95 [4] 38:25 39:3 39:5 46:16
'sender's [2] 71:15 72:4

-/-

/ [2] 1:16 3:10

-1-

1 [5] 8:2 8:12 42:12 42:14 42:17
10 [1] 80:7
1000 [3] 2:20 4:14 6:19
10:20 [1] 54:3
10:42 [1] 54:6
11 [10] 1:22 2:5 3:22 4:5 5:22 6:5 7:5 9:2 79:19 80:24
11:23 [2] 86:7 86:9
11th [1] 9:5
12th [1] 88:21
14 [2] 56:5 64:3
14th [1] 55:8
1500 [2] 2:10 6:9
15th [1] 74:23
17 [1] 81:15
18th [3] 61:4 62:24 63:11
19 [4] 68:22 83:19 87:14 87:17
1978 [2] 64:20 64:25
1979 [1] 65:1
1980 [3] 65:5 65:8 65:12
1990 [1] 11:11
1994 [17] 11:2 11:5 11:13 12:11 12:15 14:11 17:16 37:14 42:22 43:2 65:23 66:6 67:9 67:14 68:22 69:24 83:20
1995 [49] 15:17 17:21 17:22 18:11 19:12 19:20 20:10 21:7 21:19 21:20 22:8 23:15 24:2 25:9 25:15 25:21 27:8 27:21 28:1 28:4 28:6 29:9 29:11 30:14 35:12 35:15 35:19 36:4 37:3 37:25 40:7 43:6 46:17 55:8 56:5 56:7 62:14 64:3 70:15 72:11 73:1 73:11 73:24 75:3 77:14 78:2 78:15 79:6 81:25
1996 [12] 1:22 2:5 3:22 4:5 5:22 6:5 9:2 9:5 61:5 62:24 73:11 88:22
19th [5] 14:11 14:16 15:4 17:16 43:1
1st [2] 73:24 74:22

-2-

2 [3] 8:4 64:6 86:10
20 [1] 80:24
206 [1] 57:8
207 [1] 57:10
2100 [2] 2:10 6:9
214 [1] 57:14
21st [3] 11:5 11:13 12:1
23 [1] 81:15
24 [1] 80:6
25 [9] 8:15 79:8 79:14 79:24 80:5 80:12 81:17 81:18 82:3
250 [3] 2:4 4:4 6:4
26 [5] 79:6 80:7 80:22 80:24 81:25
267-8500 [2] 53:21 53:23
27 [2] 81:11 81:15
27th [1] 69:24
28 [3] 8:12 8:15 79:8

-3-

3 [4] 8:6 70:23 71:4 72:10
301 [1] 57:12
3400 [3] 2:15 4:10 6:14
344-4271 [3] 2:24 4:18 6:23
37,346 [1] 5:1

-4-

4 [5] 8:8 70:23 71:4 71:10 71:24
45 [3] 2:15 4:9 6:14
48326 [3] 2:20 4:15 6:19

-5-

5 [2] 8:10 79:9
5445 [3] 2:4 4:4 6:4
55402-1609 [3] 2:16 4:10 6:15

-6-

6 [3] 8:13 79:9 79:12
66 [1] 7:6

-7-

7 [1] 8:16
7/14/95 [1] 8:4
7/26/95 [2] 8:12 8:15
78403-1500 [2] 2:11 6:10

-8-

8 [2] 79:14 79:17
810 [4] 2:24 4:18 6:23 53:23
86 [1] 7:7

-9-

9 [1] 79:14
9-6-2000 [1] 88:24
94-433467-NP [1] 3:7
9:26 [4] 2:6 4:6 6:6 9:6

-A-

a.m [8] 2:6 4:6 6:6 9:6 54:3 54:6 86:7 86:9
above-entitled [3] 2:2 4:2 6:2
access [30] 16:17 16:22 17:7 17:14 17:20 17:23 18:1 18:10 19:3 19:5 19:8 19:11 19:19 20:9 21:1 21:10 28:25 29:20 39:2 50:2 50:13 50:20 51:15 52:8 52:22 69:1 69:7 73:11 77:3 80:15
accessed [5] 16:14 17:2 21:6 29:4 29:17
accessible [1] 73:12
accompany [1] 75:25
accomplished [2] 31:15 75:1
account [2] 71:17 72:6
accusation [2] 81:19 81:23
accuse [1] 81:21
action [5] 1:10 43:23 69:24 88:16 88:19
actions [1] 41:16
activities [1] 41:19
add [6] 32:16 32:22 34:6 34:8 38:14 38:15
added [3] 80:14 81:9 81:22
addition [2] 57:2 62:12
admitted [1] 68:6
advice [3] 10:18 62:1 62:2
advised [1] 72:21
affidavit [9] 8:7 8:9 8:17 41:17 45:25 70:24 71:2 71:11 71:25
affixed [1] 88:21
afraid [1] 34:12
afternoon [1] 12:2
afterwards [1] 29:25
again [15] 16:11 26:8 28:6 28:18 34:25 47:16 56:24 59:8 66:21 68:24 69:25 70:2 71:25 80:5 80:8
against [5] 25:18 69:22 70:5 70:6 84:21
ago [2] 59:17 61:6
agree [2] 33:3 33:6
agreement [1] 13:15
ahead [9] 32:1 32:10 33:12 34:2 38:13 58:10 67:25 85:1 85:8
air [10] 18:19 18:24 71:16 71:18 71:21 72:5 72:7 72:13 72:15 72:22
allegations [1] 55:20
alleged [3] 54:20 56:8 56:18
alleging [1] 48:24
allow [2] 38:4 52:21
allowed [3] 18:10 20:6 27:23
almost [1] 53:4
alone [1] 18:8
along [1] 40:9
amber [1] 57:16
among [6] 16:4 57:24 83:16 84:3 84:12 85:12
amount [1] 21:15
ANDERSON [1] 5:8
answer [22] 16:21 17:4 17:7 24:12 32:2 32:11 32:14 32:17 32:24 34:3 34:9 37:17 37:19 38:15 46:5 51:19 54:14 60:2 61:22 61:24 66:16 70:16
answered [1] 31:25
answers [1] 66:1
ANTONIO [1] 1:5
appearance [1] 9:9
APPEARANCES [3] 2:8 4:7 6:7
Appearing [8] 2:12 2:17 2:21 4:11 4:16 6:11 6:16 6:20
appointed [1] 55:11
appreciate [2] 46:5 63:21
April [11] 29:9 29:10 30:14 35:15 37:25 38:24 39:5 77:14 78:2 78:25 82:11
area [11] 10:15 14:14 14:14 14:17 16:6 27:12 28:10 28:17 69:11 70:19 83:13
areas [1] 65:11
argumentative [4] 32:3 32:20 32:25 37:22
arise [1] 55:16
arranged [1] 83:10
arranging [1] 45:17
arrived [4] 29:25 36:13 75:17 76:2
arriving [1] 29:19
arts [1] 64:16
aside [1] 83:9
assistance [3] 15:8 16:12 35:5
assisted [1] 74:9
associated [4] 66:5 67:2 68:3 76:19
assured [1] 60:7
attached [1] 56:2
attend [5] 11:14 11:15 12:4 36:12 67:11
attention [5] 39:16 67:8 71:10 71:24 79:13
attest [1] 80:20
attorney [7] 10:4

12:25 36:18 55:7 74:14 88:14 88:18
attorney-client [5] 61:23 66:1 66:12 66:18 66:22
attorneys [9] 30:15 30:19 35:4 48:11 77:7 77:22 78:7 78:11 82:2
attorneys' [1] 77:18
Aubrey [1] 75:19
Auburn [24] 2:20 4:15 6:19 15:2 15:7 15:10 17:17 23:11 28:11 40:10 40:12 42:23 43:9 43:21 43:25 44:2 44:20 44:25 50:19 68:18 69:3 73:5 75:21 82:18
authorized [2] 29:12 43:20
available [5] 40:14 40:15 40:20 68:2 73:8
aware [36] 15:12 15:14 15:18 19:4 24:18 25:3 25:10 36:25 37:2 37:15 41:9 41:11 41:12 41:14 41:24 42:1 42:3 45:11 48:20 49:1 50:10 50:13 50:20 51:1 51:3 51:4 56:7 56:21 60:21 65:21 69:15 69:18 70:9 70:12 84:1 84:5
away [1] 26:25

-B-

B [2] 8:1 10:14
bachelor [1] 64:16
back-up [1] 57:18
background [1] 54:25
Baird [1] 50:6
Bank [2] 2:10 6:9
base [2] 62:10 62:12
based [1] 70:2
basis [1] 61:22
beat [1] 33:6
became [3] 15:18 19:4 70:9
become [1] 65:21
began [3] 49:11 65:4 74:1
begin [3] 11:13 14:24 22:24
beginning [6] 21:24 22:20 61:4 73:10 73:10 79:17
begins [1] 62:23
behalf [10] 2:12 2:17 2:21 4:11 4:16 6:11 6:16 6:20 9:14 40:22
behind [1] 76:17
BELEN [1] 1:8
belonged [1] 80:17
belongs [2] 81:8 81:8
benefits [3] 10:20 62:18 65:15
best [7] 12:22 14:10 15:16 17:19 27:17 37:10 77:13
between [7] 26:11 38:23 55:16 63:9 67:2 69:20 73:14
beyond [3] 39:5 64:15 84:22
big [1] 58:6
bills [10] 18:19 18:24 71:16 71:18 71:21 72:5 72:7 72:13 72:15 72:22
Bob [1] 30:18
bonus [1] 62:17
bottom [1] 80:13
box [3] 2:10 6:9 81:4
boxed [2] 14:20 15:5
boxes [29] 18:16 27:17 29:21 71:14 71:18 71:20 71:20 71:23 72:3 72:7 72:9 72:10 75:23 76:3 76:4 76:9 76:13 76:15 79:18 79:19 79:21 79:24 80:12 80:16 80:20 81:2 81:17 81:18 82:3
boxing [1] 14:25
Bradley [6] 15:9 16:12 18:5 23:10 69:7 69:8
break [4] 53:3 53:5 53:6 53:12
Brian [4] 15:9 16:12 18:5 69:7
broad [1] 59:10
brought [1] 67:8
Brown [2] 30:18 48:12
brush [1] 59:10
brushing [1] 31:18
bumper [2] 57:14 57:15
Burns [5] 2:19 4:14 6:18 61:8 61:10

-C-

C [3] 2:9 6:8 8:7
C-95-470 [1] 1:10
cabinet [1] 52:2
calendar [1] 11:15
Canard [1] 65:3
cannot [4] 39:6 60:2 60:22 60:23
captioned [1] 71:1
car [1] 62:20
care [2] 62:19 76:21
career [1] 65:13
carefully [1] 88:10
CARLAS [1] 5:6
cars [1] 83:6
case [10] 13:8 13:9 43:23 50:7 55:3 55:6 62:23 62:25 63:6 63:15
cases [1] 25:18
Categorically [1] 83:21
Catherine [3] 23:2 23:4 74:6
caught [1] 37:21
Center [19] 15:3 15:7 15:10 17:18 23:11 28:11 40:11 40:13 42:23 43:9 43:25 44:16 44:18 50:19 68:19 69:4 74:21 75:14 75:21
Centers [1] 64:25
certain [6] 51:16 54:21 55:15 56:23 56:24 65:21
certify [3] 62:3 88:5 88:14
cetera [1] 39:22
chain [1] 46:2
characterization [1] 58:8
characterized [1] 58:13
Charles [6] 22:9 22:10 23:2 23:7 74:2 74:6
check [1] 21:15
chose [1] 74:4
Christi [5] 1:2 2:11 2:12 6:10 6:11
Chrysler [117] 1:11 2:17 2:18 2:20 2:22 3:8 4:12 4:13 4:14 4:16 5:7 6:16 6:17 6:19 6:21 8:5 8:7 8:9 8:11 8:14 8:17 9:15 10:4 10:5 10:11 10:16 11:3 11:23 12:7 15:6 20:21 23:5 23:18 24:3 25:3 25:11 25:18 25:24 26:12 27:18 30:21 32:6 32:6 34:22 35:9 35:16 35:17 35:20 37:25 38:2 38:5 38:21 40:22 40:22 40:24 40:25 41:21 41:25 42:23 43:8 43:24 44:15 44:17 44:24 45:3 45:6 46:13 47:12 47:13 48:2 48:3 48:18 48:22 48:24 50:6 50:23 54:18 55:3 55:6 55:16 55:17 57:23 61:3 62:6 62:23 65:5 65:12 65:13 67:3 68:3 69:20 69:22 69:24 70:4 70:5 71:1 72:20 73:5 73:14 74:20 75:6 75:13 76:21 77:9 77:17 77:24 79:5 79:23 80:2 81:4 81:8 82:17 83:19 84:19 84:20 85:5 85:13
Chrysler's [17] 13:3 18:14 26:11 28:13 29:5 35:3 36:2 36:9 44:10 55:3 55:5 56:9 56:18 63:20 71:16 72:5 78:21
CHRYSLER-DODGE [1] 5:8
Circuit [5] 3:2 55:12 69:23 69:25 70:24
Civil [1] 1:10
claimed [1] 57:1
claiming [1] 57:3
claims [2] 70:10 70:12
clarification [2] 37:20 64:9
clarify [6] 24:9 26:16 28:7 40:8 58:10 59:3
clean [1] 31:20
clear [2] 68:12 71:6
cleared [1] 11:15
Clippert [11] 22:9 22:10 22:10 22:17 23:1 24:2 26:17 43:20 48:13 74:3 74:9
collection [1] 72:23
commencing [3] 2:5 4:5 6:5
commenting [1] 81:13
Commission [2] 87:16 88:24
commissioned [1] 88:4
company [1] 62:19
compensation [1] 62:13
competitive [2] 56:20 57:4
compilation [1] 74:9
completed [3] 28:5 50:16 74:8
compliance [1] 75:2
comply [1] 36:6
computer [43] 15:22 15:25 16:2 16:4 16:7 17:3 39:18 39:21 39:25 40:3 40:5 40:8 40:12 40:14 40:18 40:20 41:13 41:16 41:20 42:2 44:5 44:7 44:10 44:24 45:5 45:18 46:15 46:18 47:14 48:5 49:6 49:8 49:11 49:14 50:3 50:8 50:14 50:24 52:11 52:14 52:14 52:22 68:14
computerized [3] 16:24 16:25 17:3
concept [2] 39:17 39:17
concerning [8] 25:23 56:6 59:24 60:19 65:14 65:15 84:20 88:9
concluded [2] 86:7 86:8
conducted [3] 73:16 73:18 73:25
conference [2] 11:24 29:13
confident [1] 35:23
confidential [5] 66:23 67:6 68:5 68:8 72:20
conflicts [1] 63:16
CONN [1] 5:8
connection [3] 41:18 46:1 70:13
consent [1] 23:18
constitute [1] 79:22
contact [2] 47:6 72:9
contacted [5] 11:2 11:5 11:12 11:14 76:10
contain [5] 34:22 54:22 56:10 56:23 58:20
contained [2] 58:1 58:25
containing [1] 67:17
contains [1] 58:24
content [2] 16:2 71:12
contents [1] 71:20
context [1] 17:10

continued [2] 52:17 76:21
continues [2] 70:1 80:22
continuing [1] 72:17
control [5] 13:23 39:1 39:2 51:15 76:8
controversy [1] 88:9
Cook [1] 57:8
coordinating [1] 74:2
copied [1] 55:8
copy [2] 64:4 68:13
copy' [2] 71:15 72:4
copying [1] 56:5
Corporate [3] 2:4 4:4 6:4
corporation [22] 1:11 2:17 2:18 2:22 3:8 3:9 4:12 4:13 4:16 5:7 6:16 6:17 6:21 9:15 10:4 10:6 10:11 10:17 62:6 71:1 75:7 79:5
Corpus [5] 1:2 2:11 2:12 6:10 6:11
correct [46] 14:18 15:23 17:12 19:12 19:13 19:22 19:23 20:8 20:20 21:11 21:12 22:3 27:3 34:11 37:1 39:8 39:15 40:23 41:1 41:22 42:25 43:5 43:10 43:11 43:17 44:4 44:16 44:22 45:1 47:15 48:6 49:20 51:23 51:24 52:3 52:8 52:12 52:23 54:23 54:24 57:24 65:23 65:24 68:23 76:6 82:16
correspondence [1] 54:19
counsel [53] 2:19 4:13 6:18 9:9 10:12 10:16 10:19 13:3 21:23 22:1 23:19 23:23 24:7 25:17 25:22 26:12 28:16 29:6 29:18 31:4 35:20 37:5 37:12 43:14 44:3 46:19 52:2 54:19 55:2 55:3 55:5 57:20 58:20 62:1 62:2 62:8 63:19 63:20 65:17 75:6 75:9 75:15 76:23 77:25 78:21 78:23 78:24 79:16 82:8 83:1 84:24 88:15 88:18
Counsel's [1] 28:12
country [1] 25:10
County [10] 3:2 5:8 43:23 55:12 69:23 69:25 70:25 87:15 88:2 88:24
couple [3] 24:25 26:5 26:7
course [2] 53:5 67:7
court [31] 1:1 3:2 5:5 25:6 28:7 42:9 42:13 42:16 47:20 55:13 64:7 66:3 66:19 66:23 69:23 69:25 70:23 70:25 73:19 73:22 73:24 74:11 74:12 74:17 74:18 75:2 76:23 77:2 77:6 78:8 79:2
court's [1] 74:22
Courtney [5] 8:5 54:20 55:7 64:3 70:14
covered [1] 66:12
crash [3] 57:11 84:19 84:25
crashworthiness [1] 57:13
create [1] 49:2
created [3] 49:6 50:17 54:8
credibility [1] 62:9
CSR-2258 [4] 2:3 4:3 6:3 88:3
CTC [6] 43:3 43:4 43:13 44:15 44:17 75:18
CTC19 [1] 44:13
cubicle [2] 14:14 14:17
curious [2] 31:10 60:4
custody [3] 13:23 46:2 76:21
cut [1] 54:15

-D-

D [2] 7:1 9:19
damages [1] 70:6
data [3] 17:3 41:21 44:7
date [7] 9:4 11:14 11:16 39:5 81:24 82:15 88:6
dated [3] 56:4 64:3 79:6
dates [1] 30:8
DAVID [2] 3:4 3:4
days [9] 19:24 20:1 21:8 24:25 26:4 26:5 26:5 26:7 26:23
dead [1] 33:6
dealing [2] 59:1 59:14
December [19] 11:5 11:12 12:11 12:15 14:11 14:16 15:4 17:16 38:23 42:22 43:1 63:12 66:6 67:9 67:14 68:22 69:23 83:19 85:25
decision [1] 63:20
defect [1] 85:5
defective [1] 48:25
Defendant [8] 1:12 2:17 2:21 3:10 4:11 4:16 6:16 6:20
Defendants [1] 1:16
defended [1] 48:22
defending [2] 25:17 48:18
degree [3] 64:16 64:17 64:19
deleted [1] 41:12
Dennis [4] 8:7 17:24 70:18 70:24
department [12] 10:19 10:20 17:18 20:24 23:5 40:12 46:22 67:5 67:9 67:10 69:3 73:5
DEPONENT [1] 87:1
deposition [37] 1:20 2:1 3:20 4:1 5:20 6:1 8:2 8:4 8:6 8:8 8:10 8:11 8:13 8:14 8:16 9:6 13:9 36:22 42:14 50:6 56:3 59:18 61:12 61:15 61:18 63:22 64:6 71:4 79:4 79:9 79:13 86:5 86:6 86:8 86:10 88:12 88:16
describe [3] 64:22 65:10 68:24
described [8] 27:22 54:10 64:2 68:15 68:21 72:13 73:15 75:5
description [4] 59:4 59:10 77:25 78:22
design [1] 85:12
designated [1] 38:21
destroyed [4] 83:18 84:19 85:6 85:14
detail [5] 41:17 42:4 49:4 53:8 67:12
detailing [1] 45:25
details [1] 56:25
determination [1] 36:8
determine [2] 35:2 35:8
determining [1] 18:13
Detroit [3] 64:18 64:24 83:4
develop [1] 69:20
Dick [2] 11:18 17:25
Dickinson [23] 12:25 22:2 22:6 22:11 23:13 24:4 26:13 29:23 30:18 30:19 33:15 48:10 48:17 48:22 50:23 74:3 82:12 82:13 82:22 83:2 83:4 83:10 83:13
difference [1] 58:6
different [3] 31:13 32:13 44:18
direct [1] 79:13
directed [5] 73:22 74:19 75:22 83:22 84:2
directing [1] 71:24
direction [7] 16:18 17:8 28:9 43:22 45:4 73:9 73:18
directly [2] 45:19 83:8
director [3] 12:8 12:10 14:22
discharged [1] 67:14
disclose [1] 66:16
disclosed [3] 67:1 67:6 72:18
disclosing [2] 65:25 66:22
disclosure [1] 68:4
disclosures [1] 70:7
discovery [6] 55:14 55:15 74:15 78:9 80:1 81:12
discuss [1] 67:11
discussed [2] 34:20 61:20
discussion [1] 61:10
discussions [6] 25:16 26:1 45:8 45:12 55:20 80:19
diskettes [1] 40:19
disks [8] 16:2 16:4 16:7 16:10 39:21 39:21 40:3 49:14
disposal [1] 20:22
dispute [1] 81:2
disputes [1] 55:15
district [5] 1:1 1:1 5:5 5:7 25:4
disturb [1] 25:5
disturbing [1] 25:11
DIVISION [1] 1:2
doc [1] 27:17
document [5] 24:10 27:9 50:7 59:9 84:2
documents [74] 16:9 17:20 17:23 18:16 18:21 21:22 21:25 22:8 22:21 23:17 25:15 26:25 27:9 27:12 28:1 28:3 28:8 28:9 29:9 29:12 29:15 29:24 30:1 30:23 31:5 34:13 34:18 34:21 35:25 36:5 36:8 37:8 39:15 40:9 51:14 52:8 55:21 57:24 58:4 59:19 59:24 60:1 60:8 60:10 60:15 60:16 60:24 68:13 69:5 69:10 71:7 73:8 73:11 73:12 74:1 75:10 76:20 76:22 76:25 77:4 77:8 77:13 79:21 80:15 81:21 82:6 83:6 83:7 83:8 83:9 83:16 83:22 84:7 84:12
done [15] 20:11 23:20 26:14 26:19 35:12 49:18 49:19 50:10 50:14 52:24 53:4 77:3 78:1 78:10 81:5
Donnelly [4] 2:13 4:8 6:12 9:8
door [4] 14:15 29:13 76:13 76:17
down [3] 42:5 42:11 62:25
download [11] 40:17 41:15 44:7 44:24 45:4 45:15 45:18 46:9 47:2 47:13 48:4
downloaded [11] 41:13 41:20 41:24 42:2 46:13 46:14 49:7 50:17 50:25 52:14 52:16
downloading [13] 40:23 45:20 45:23 46:1 46:18 46:23 46:25 47:8 48:15 49:3 49:18 49:20 52:12
drive [7] 2:4 2:20 4:4 4:14 6:4 6:19 49:14
drives [1] 39:22
duly [1] 9:20
during [9] 26:22 28:25 37:6 50:5 67:6 70:17 73:7

77:18 84:20

-E-

E [5] 7:1 8:1 8:5 9:19 9:19
early [29] 15:16 17:20 17:22 18:11 19:11 19:20 20:10 21:7 21:19 21:20 22:8 23:25 24:1 24:10 24:23 25:2 25:9 25:15 25:20 27:7 27:20 28:6 35:12 35:19 37:3 43:6 54:9 70:15 73:10
education [1] 64:15
Edward [1] 55:12
effect [1] 55:25
effective [1] 51:17
effects [3] 16:4 16:9 34:23
efforts [1] 80:11
egress [1] 14:13
either [4] 61:8 68:3 69:13 83:6
ELKHART [1] 5:6
embarrassing [1] 66:11
employ [1] 38:1
employed [2] 88:15 88:18
employee [16] 10:20 11:3 40:20 40:24 41:1 46:13 47:12 47:13 48:2 48:3 62:18 65:14 77:9 77:24 79:23 88:17
employees [1] 38:6
employment [9] 64:21 64:22 65:5 65:14 65:21 66:6 67:1 67:7 67:15
empty [1] 75:8
end [3] 26:7 69:2 75:2
ENEDELIA [1] 1:15
engineers [1] 85:12
enlarged [1] 79:7
entered [1] 74:23
entering [1] 18:2
entire [1] 73:7
entrance [2] 20:17 52:1
entry [1] 71:7
equipment [1] 20:21
Eric [4] 2:14 4:8 6:13 9:14
established [2] 31:21 33:1
establishing [1] 46:1
et [1] 39:22
evaluation [1] 67:13
event [2] 27:25 36:3
events [1] 53:1
exact [2] 30:8 35:10
exactly [1] 24:24
examination [10] 7:5 7:6 7:7 9:23 64:12 65:20 70:17 84:16 84:23 88:11
examined [2] 9:21 88:10
except [4] 10:24 19:9 71:20 73:13
Excuse [1] 66:7
executive [2] 12:8 12:10
exhibit [19] 8:2 8:4 8:6 8:8 8:10 8:13 8:16 42:11 42:14 42:17 56:3 64:5 71:2 71:4 71:10 71:24 79:9 79:12 86:10
Exhibits [1] 70:23
existed [1] 11:7
exit [1] 52:1
expect [1] 63:17
experience [1] 53:9
expires [2] 87:16 88:24
explain [3] 35:15 36:14 64:14
explained [2] 41:7 43:1
expose [2] 66:9 66:10
express [11] 18:18 18:23 20:7 31:14 71:16 71:17 71:21 72:5 72:6 72:13 72:22
expressed [1] 31:8
extent [2] 35:4 59:6
eye [1] 85:25
eyes [1] 39:12

-F-

facilities [2] 18:7 76:5
facility [3] 17:17 23:6 69:5
fact [16] 31:21 33:2 41:10 45:19 47:12 48:1 48:16 48:21 49:17 50:5 54:25 59:25 61:7 67:1 67:11 78:4
facts [1] 68:12
failed [3] 54:21 56:9 60:17
fair [4] 26:21 58:3 58:7 67:24
fall [2] 11:2 65:22
familiar [6] 16:19 48:16 48:21 49:17 49:23 50:5
faxed [1] 56:2
February [20] 21:19 21:20 22:8 23:25 24:1 24:10 24:23 25:2 25:9 25:15 25:20 27:7 27:20 40:7 40:7 46:16 46:17 54:9 70:15 73:1
Federal [9] 18:18 18:23 71:15 71:17 71:21 72:4 72:6 72:12 72:22
felt [2] 34:15 35:16
figure [3] 33:5 33:8 38:2
file [16] 23:21 41:21 42:2 44:8 44:11 44:25 52:11 56:10 56:20 57:6 57:7 57:13 57:15 58:21 72:23 85:4
filed [8] 62:25 69:22 69:24 70:14 70:24 71:3 74:12 74:16
files [127] 13:5 13:24 14:8 14:17 14:19 14:20 15:5 15:15 15:19 16:14 16:17 16:22 16:24 16:25 17:2 17:3 17:5 17:11 17:13 17:15 18:2 18:3 18:11 18:21 19:3 19:11 19:20 20:9 20:17 21:2 21:7 21:10 21:14 21:15 24:6 24:8 24:16 25:5 25:12 25:23 26:15 26:23 27:7 27:10 27:15 27:16 27:24 28:25 29:4 29:17 29:20 32:8 34:14 34:18 35:18 35:21 38:23 39:2 39:3 39:4 39:7 39:17 39:18 39:20 41:9 41:13 42:2 42:21 43:2 43:7 43:8 43:13 43:14 44:2 44:5 44:24 45:15 46:10 46:13 46:18 47:2 47:5 47:14 48:4 49:3 49:6 49:13 50:3 50:9 50:14 50:17 50:21 50:24 51:7 51:9 51:11 51:22 52:14 52:17 52:22 54:22 57:4 59:5 60:9 60:11 60:13 60:19 68:10 68:13 73:2 74:19 74:24 75:13 77:19 77:23 78:2 78:11 78:25 79:22 82:3 82:25 83:12 83:17 83:23 84:3 84:7 84:12
filing [1] 74:10
finally [1] 38:24
financially [1] 88:19
finding [1] 67:12
finish [1] 58:9
finished [3] 33:19 64:9 76:14
firm [17] 13:1 22:2 22:6 23:14 26:13 30:19 48:11 48:17 48:22 50:23 64:24 64:25 65:2 74:3 82:14 82:23 83:13
first [19] 9:20 11:2 11:6 11:9 15:14 15:18 24:12 29:3 29:7 29:16 37:17 45:2 56:14 61:1 70:9 70:12 71:10 78:5 79:13
Florida [2] 25:4 25:7
FMVSS [4] 57:8 57:10 57:12 57:13
focus [2] 81:6 81:7
focused [1] 80:16
follow [3] 51:18 61:25 62:2
following [3] 67:13 74:22 88:7
follows [2] 9:22 47:21
Fonger [12] 11:19 12:21 12:22 18:19 18:23 19:7 20:5 21:9 71:19 71:22 72:8 72:16
forced [1] 66:19
form [1] 88:11
forward [1] 63:23
found [5] 16:4 16:7 16:10 59:5 59:7
foundation [1] 84:23
four [7] 61:19 63:24 71:10 71:13 71:14 72:1 72:3
Friend [3] 1:4 3:5 5:3
front [1] 58:23
Frost [2] 2:10 6:9
FSNCTC19 [5] 8:3 42:3 42:6 44:9 44:10
function [2] 14:24 18:5

-G-

G [3] 8:4 9:19 9:19
G-o-o-g-a-s-i-a-n [1] 55:9
gaining [2] 14:13 19:8
gander [1] 38:18
general [35] 2:19 4:13 6:18 10:16 12:16 17:7 25:17 25:21 28:12 28:16 29:5 29:18 43:14 44:3 51:20 52:2 56:10 57:3 57:8 57:9 57:11 57:12 57:14 57:17 57:18 58:21 59:10 65:11 65:16 75:6 75:9 75:14 76:23 82:8 83:1
generally [4] 17:5 17:11 59:5 70:20
gentleman [2] 11:7 49:23
gentlemen's [1] 72:14
George [4] 55:9 55:10 55:11 64:4
given [6] 13:2 41:15 45:4 51:16 72:16 88:13
giving [1] 36:23
Goes [1] 62:9
gone [31] 27:8 57:4 57:5 57:6 57:7 57:8 57:9 57:9 57:10 57:11 57:12 57:12 57:13 57:14 57:14 57:15 57:16 57:17 57:18 57:18 58:5 58:13 58:13 58:14 59:19 60:6 60:15 60:16 81:16 81:18 81:20
Gonzalez [6] 1:4 1:5 1:6 1:6 1:6 9:13
good [5] 30:4 30:11 38:17 38:18 53:2
Googasian [11] 55:9 55:9 55:10 55:11 56:5 64:5 74:15 79:25 80:5 80:11 81:12
goose [1] 38:18
graduation [1] 64:23
granted [2] 19:3 50:2
graphics [1] 20:23
great [1] 53:16
greeted [1] 75:18
Gregory [11] 1:21 2:2 3:21 4:2 5:21 6:2 7:4

9:7 10:1 87:12 88:7
ground [1] 71:8
group [1] 62:19
guard [2] 33:21 75:19
guess [3] 51:6 51:7 61:6
guys [1] 53:24

-H-

H [1] 8:1
H-a-n-t-l-e-r [1] 10:14
H.G [1] 57:8
Haas [2] 2:9 6:8
half [2] 63:10 63:10
Hamilton [3] 30:18 48:12 80:18
hand [4] 37:24 42:4 42:17 88:20
handed [2] 18:19 18:25
Hantler [1] 10:14
happening [1] 15:12
hard [4] 39:21 39:21 49:13 68:13
headquarters [4] 11:23 28:14 28:19 82:17
headrest [1] 57:17
health [1] 62:18
hear [1] 65:7
heard [2] 38:17 38:19
hearing [3] 73:23 74:22 78:9
hearsay [4] 39:11 67:18 67:21 71:8
held [3] 11:21 11:22 12:1
Hello [2] 10:8 16:24
help [1] 60:18
Henri [6] 8:17 40:17 40:21 40:25 44:6 44:23
hereby [2] 66:15 88:5
hereinbefore [1] 88:6
hereto [1] 88:19
hereunto [1] 88:20
HERNANDEZ [4] 1:7 1:7 1:7 1:14
high [1] 64:15
Highland [19] 11:22 23:6 28:12 28:19 28:19 29:6 29:22 29:23 43:15 43:21 44:2 52:3 74:25 75:4 75:15 75:25 76:7 76:11 82:18
Hills [24] 2:20 4:15 6:19 15:2 15:7 15:10 17:17 23:11 28:11 40:10 40:12 42:23 43:9 43:21 43:25 44:2 44:20 44:25 50:19 68:18 69:3 73:5 75:21 82:18
horse [1] 33:6
hours [1] 61:19
Houten [1] 65:3

-I-

identification [4] 42:15 71:5 79:10 86:11
identified [3] 61:2 67:4 79:25
identify [1] 66:5
identifying [1] 80:16
immediate [1] 10:13
impact [1] 57:11
implied [1] 26:18
INC [1] 5:8
INCAPACITATED [1] 1:5
incident [1] 27:25
include [5] 22:4 52:1 52:7 52:11 52:16
included [1] 82:19
including [1] 66:17
INDEPENDENT [1] 5:7
indicated [2] 73:24 80:10
indicates [2] 80:15 81:16
indications [1] 63:9
individual [4] 19:7 40:16 67:5 76:14
Individually [3] 1:4 3:4 5:3
individuals [7] 22:24 26:19 74:4 74:5 75:17 76:2 77:20
inform [1] 24:15
information [27] 8:3 16:2 34:22 39:21 39:25 40:3 40:4 40:18 66:1 66:2 66:2 66:17 66:18 66:23 67:6 67:7 68:2 68:5 68:8 68:17 68:20 69:15 72:18 72:19 72:20 78:20 84:6
informed [10] 18:12 25:22 47:11 48:1 48:8 61:7 62:22 62:24 63:4 68:16
informing [1] 48:14
initial [1] 10:1
initials [1] 44:15
injunctive [1] 70:5
inquired [1] 70:18
inquiry [2] 81:7 81:7
insinuating [1] 33:23
instruct [1] 61:21
instructed [2] 19:7 45:15
instructing [2] 47:12 48:2
instruction [1] 20:5
instructions [1] 41:15
insurance [1] 62:19
insure [1] 24:7
integrity [1] 82:25
interest [1] 72:12
interested [1] 88:19
interrupting [1] 59:18
inventoried [2] 27:9 55:22
inventory [45] 24:17 25:8 26:14 26:14 27:12 27:14 27:16 36:1 43:19 49:3 49:6 49:12 49:18 49:19 52:11 52:16 52:19 54:8 54:18 54:21 56:9 56:19 56:22 57:1 57:22 58:6 58:20 58:23 58:25 59:4 59:7 59:14 59:20 60:7 60:18 60:22 73:16 73:18 73:22 73:25 74:1 74:5 74:8 74:10 76:20
inventorying [17] 21:25 22:21 22:25 24:20 24:22 25:1 25:14 26:2 26:10 26:17 26:18 26:23 27:7 27:21 28:5 43:22 44:1
investigation [2] 72:17 85:5
investigator [1] 12:23
investigators [1] 68:7
invite [2] 23:19 24:6
invited [4] 23:22 23:23 36:11 46:20
involved [4] 45:16 48:18 65:13 78:21
involvement [3] 10:21 13:8 16:19
involving [1] 66:4
issue [4] 60:14 60:15 66:10 80:13
issued [2] 20:4 21:9
issues [6] 57:13 57:14 65:14 65:21 66:5 66:25
items [5] 54:21 56:23 56:24 80:13 80:16

-J-

J [11] 1:21 2:2 3:21 4:2 5:21 6:2 7:4 9:19 10:1 87:12 88:7
January [12] 15:16 17:21 17:22 18:11 19:11 19:20 20:10 21:7 23:15 39:3 72:10 73:10
JEFFREY [1] 3:5
Jerry [3] 11:19 12:18 12:19
JESUS [1] 1:7
John [5] 5:2 11:19 12:21 12:22 18:19
Joseph [3] 11:19 12:24 12:25
Journal [1] 85:23
Jr [1] 8:5
judge [4] 25:4 43:22 55:11 73:23
Judging [1] 53:9
JUDICIAL [1] 5:2
July [7] 55:8 56:4 56:7 64:3 78:15 79:6 81:25
jury [20] 35:15 37:24 38:22 45:14 50:1 50:12 50:22 52:21 55:10 59:23 64:14 64:22 70:8 71:12 72:1 73:16 75:11 79:15 80:8 81:14

-K-

keep [3] 31:20 81:2 85:25
kept [2] 30:2 76:24
KEVIN [1] 3:5
Kevlin [1] 65:3
key [5] 28:21 69:8 76:8 76:16 76:17
keys [1] 69:6
Kienbaum [10] 8:4 48:12 55:1 55:1 55:2 55:19 55:24 56:4 64:4 79:18
Kienbaum's [1] 81:20
kind [3] 42:4 78:5 84:7
knew [3] 11:6 11:9 37:12
knowledge [18] 13:18 17:19 19:22 20:3 20:12 20:14 21:8 23:18 27:18 35:13 37:10 51:10 51:23 52:25 79:20 83:18 84:24 85:2
known [1] 67:18

-L-

L [2] 9:19 9:19
labor [1] 65:16
lacks [1] 84:23
LaFrance [34] 8:17 40:17 40:21 40:21 40:25 41:3 41:5 41:12 41:15 41:20 41:24 42:1 44:6 44:23 45:2 45:6 45:9 45:12 45:15 45:17 45:17 45:23 45:24 46:9 46:12 46:14 46:17 49:2 49:11 50:14 50:16 50:25 52:12 52:17
lamp [2] 57:15 57:16
large [2] 71:15 72:4
last [9] 14:21 16:21 17:1 51:18 51:19 62:14 62:17 63:9 67:17
latch [17] 25:24 48:24 56:10 56:19 57:3 57:4 57:7 58:21 60:8 60:10 60:19 69:16 70:11 70:13 70:16 85:6 85:13
latches [3] 59:2 59:15 59:25
late [16] 21:20 22:8 24:1 24:10 24:23 25:2 25:9 25:15 27:7 27:20 28:1 28:3 40:7 46:16 46:17 54:9
latter [2] 21:18 36:10
law [19] 9:7 13:1 23:14 36:19 48:11 48:17 48:22 64:17 64:18 64:19 64:23 64:24 65:2 65:14 65:15 65:16 66:15 74:3 82:12
lawsuit [1] 69:22
lawyer [2] 37:13 70:14
lawyers [21] 29:8 29:19 29:23 29:25 30:21 30:22 31:17 32:8 33:15 33:19 33:21 34:13 35:2 36:4 36:11 38:2 46:24 47:7 56:8 77:12 77:16
lead [3] 55:2 55:3 55:5

Leadership [2] 57:5 57:6
leak [1] 68:7
learn [2] 19:25 61:1
learned [1] 20:2
least [1] 33:10
left [4] 18:17 33:20 33:21 33:21
legal [13] 10:18 23:19 23:23 24:7 35:20 38:4 46:19 46:22 47:4 64:21 64:25 67:12 82:19
length [1] 38:12
lengthy [1] 24:25
letter [17] 8:4 37:13 55:6 55:19 55:24 56:1 56:4 56:12 56:16 56:18 56:21 57:21 58:1 58:4 64:1 64:2 80:14
letters [2] 48:9 48:14
level [1] 64:15
liability [5] 10:22 25:18 25:24 48:19 48:23
licensed [1] 36:18
liftgate [18] 25:24 48:24 56:10 56:19 57:3 57:4 58:21 59:1 59:14 59:25 60:8 60:10 60:19 69:16 70:11 70:16 85:6 85:13
light [1] 57:18
limit [2] 13:17 14:6
line [9] 79:3 79:7 79:14 79:14 79:17 80:6 80:7 80:23 80:24
lines [2] 80:5 81:15
list [4] 54:21 56:9 56:19 56:23
listed [4] 58:5 59:14 59:20 60:17
listing [2] 78:3 78:5
litany [1] 58:13
litigate [1] 57:7
litigation [15] 10:22 25:25 48:19 48:23 55:17 65:17 66:4 66:24 67:2 69:20 70:3 73:14 78:22 80:2 84:20
live [1] 63:14
living [1] 10:3
loading [1] 75:23
located [5] 18:18 28:16 28:17 59:11 69:2
location [16] 15:2 15:6 41:21 42:3 43:3 43:8 43:15 44:9 44:11 44:25 68:24 74:21 74:25 75:4 82:21 88:6
locations [1] 42:20
lock [2] 76:8 76:12
locked [25] 14:12 14:15 18:2 26:8 28:10 28:11 28:15 28:21 29:1 29:5 29:13 29:17 29:20 33:20 33:22 40:10 43:18 50:18 52:2 68:17 68:25 69:5 73:4 76:17 83:12
log [7] 30:2 30:4 52:1 52:4 52:5 52:13 76:24
longer [2] 40:25 44:23
look [8] 29:19 29:24 30:1 35:25 36:7 38:24 63:23 81:2
looked [4] 33:20 39:4 39:8 78:4
looking [3] 33:19 39:14 76:24
LOU [1] 1:6
LUIS [2] 1:4 1:5

-M-

Macomb [2] 88:2 88:24
maintain [1] 82:24
maintained [20] 13:24 68:11 69:6 72:23 73:2 74:19 75:13 77:8 77:23 78:11 79:22 82:3 82:7 82:13 83:12 83:17 83:23 84:3 84:7 84:12
maintenance [1] 13:5
Malecki [27] 8:7 17:24 18:7 18:9 18:15 19:1 19:4 19:10 19:15 19:19 20:9 20:18 20:25 21:6 23:16 27:13 35:23 38:6 39:7 40:13 43:6 43:12 51:22 70:19 70:24 71:11 71:13
Malecki's [3] 18:1 35:11 36:16
Malecki/Winter [1] 37:6
man [1] 21:10
manage [1] 65:16
manager [7] 12:16 12:19 14:23 15:9 18:5 51:20 69:7
MARCELO [1] 1:7
March [22] 21:19 21:20 22:8 24:1 24:11 24:23 25:2 25:9 25:15 25:21 27:8 27:21 28:1 28:4 28:6 28:6 54:9 73:1 73:23 74:22 74:23 75:3
MARCIA [1] 3:4
MARIA [2] 1:4 1:8
mark [2] 70:23 79:3
marked [6] 42:14 64:5 71:5 79:10 79:12 86:10
markings [2] 18:16 27:17
Marshall [4] 11:20 12:24 12:25 22:4
MARTIN [1] 1:14
MARY [1] 1:6
master [5] 55:14 74:15 78:9 80:1 81:12
materials [1] 17:9
matter [6] 2:3 4:3 6:3 66:19 70:25 79:6
matters [4] 58:1 65:15 67:17 88:9
Matthews [4] 5:2 9:12 61:3 62:23
may [5] 63:4 66:12 67:20 72:18 80:17
Mazur [5] 30:15 31:8 47:10 47:24 48:15
mean [5] 13:9 40:2 62:15 67:20 78:3
means [1] 53:11
meant [6] 17:2 17:4 17:5 17:5 59:4 59:8
measures [8] 51:14 51:16 51:19 51:25 52:6 52:10 52:15 52:20
meet [2] 61:14 61:17
meeting [10] 11:14 11:16 11:17 11:21 12:3 57:5 63:23 67:11 67:13 85:11
Melinda [5] 2:3 4:3 6:3 88:3 88:23
MELISSA [1] 1:6
members [2] 50:12 59:23
MEMO [1] 1:7
mentioned [4] 26:19 74:5 77:20 88:6
Michigan [35] 2:5 2:20 3:1 3:9 4:5 4:15 6:5 6:19 9:1 9:8 11:22 15:7 28:8 28:13 28:20 36:19 42:24 43:9 43:16 44:20 44:25 52:3 55:13 64:17 65:2 65:18 73:6 75:1 76:1 82:12 82:18 82:19 88:1 88:5 88:24
middle [2] 10:1 63:12
might [1] 74:17
Mikal [7] 2:9 6:8 9:11 10:9 11:25 15:21 58:4
Miller [64] 2:14 4:8 6:13 7:6 9:14 9:14 11:19 12:18 12:19 13:3 13:13 13:14 13:21 14:3 31:24 32:3 32:9 32:13 32:20 33:9 34:1 34:5 37:22 38:8 38:10 40:2 42:7 53:2 53:7 53:10 53:13 53:16 53:18 53:21 54:1 56:11 57:20 58:3 58:12 58:16 58:18 59:17 60:5 61:14 61:21 62:7 63:19 64:11 64:13 65:10 66:21 67:19 67:23 68:1 70:22 71:9 79:2 79:11 84:15 84:22 85:7 85:15 85:21 86:3
mind [1] 44:17
minivan [15] 12:17 19:16 20:19 25:18 25:24 48:24 51:21 69:16 70:11 70:13 70:16 84:20 84:21 85:5 85:13
Minneapolis [3] 2:16 4:10 6:15
Minnesota [3] 2:16 4:10 6:15
MINOR [1] 5:4
Minors [2] 1:6 3:5
minute [1] 59:17
minutes [4] 53:15 53:25 57:5 85:12
Miss [4] 14:22 23:1 24:3 61:10
missed [2] 32:24 54:14
moment [2] 70:1 80:4
money [1] 60:5
Moore [11] 2:3 4:3 6:3 42:8 47:18 58:15 60:5 62:4 64:2 88:3 88:23
Moran [4] 23:2 23:4 24:3 74:6
Morgan [26] 8:5 30:15 31:8 36:17 37:11 37:19 47:3 47:6 47:10 47:24 48:14 54:20 55:7 55:19 55:23 56:4 56:25 58:2 64:4 70:14 74:13 79:16 80:8 80:22 81:14 81:16
move [6] 75:1 75:16 76:1 83:5 83:7 83:11
moved [11] 43:14 74:20 74:25 76:9 82:7 82:10 82:11 82:16 82:17 82:22 83:1
movers [3] 75:17 75:17 75:25
moving [3] 29:12 76:3 82:20
Mrs [2] 15:5 16:11
Ms [7] 24:2 42:8 47:18 58:15 60:5 62:3 64:2
Murphy [4] 23:2 23:7 24:3 74:6
must [3] 31:7 34:21 36:14

-N-

N [1] 7:1
name [7] 9:11 9:25 11:3 11:7 14:21 49:24 65:3
named [2] 40:17 88:7
Nancy [2] 14:22 14:22
necessarily [1] 33:24
need [7] 13:16 40:11 40:14 46:5 53:7 53:10 66:7
neither [3] 47:9 47:23 88:14
never [3] 21:4 21:5 36:2
new [2] 75:4 76:12
next [15] 1:4 3:5 5:3 19:2 27:22 27:25 27:25 29:13 39:18 58:17 61:4 63:24 71:2 79:3 79:6
NHTSA [1] 85:4
night [1] 31:18
nobody [8] 16:14 17:19 20:6 21:10 25:21 27:11 28:24

50:22
none [5] 59:19 69:18 84:5 84:10 84:14
nonresponsive [2] 46:6 59:12
nor [1] 88:15
Nos [2] 71:4 79:9
Notarial [1] 88:21
Notary [7] 2:4 4:4 6:4 9:20 87:15 88:3 88:23
notes [1] 58:5
nothing [12] 23:20 24:8 32:15 32:21 34:7 38:14 38:15 38:22 71:22 72:8 84:15 86:4
November [12] 1:22 2:5 3:22 4:5 5:22 6:5 9:2 9:5 61:4 62:24 63:11 88:22
now [41] 11:12 15:22 19:24 24:22 25:1 27:6 30:8 33:7 35:14 39:16 39:18 40:21 41:4 41:20 42:19 44:5 45:4 45:7 45:11 47:1 49:2 54:11 54:17 56:1 57:19 65:19 68:9 69:10 69:19 70:17 73:14 74:18 76:19 77:22 79:11 79:20 79:25 80:10 80:22 81:11 82:6
NS-body [2] 57:15 57:16
number [9] 42:5 44:18 53:17 53:20 68:9 71:15 71:17 72:4 72:6

-O-

O [1] 9:19
Oakland [5] 43:23 55:12 69:23 69:25 70:25
oath [3] 9:21 16:14 88:10
object [4] 46:5 66:9 67:16 71:7
objection [16] 31:24 32:3 32:9 32:20 33:9 33:14 33:23 34:1 37:22 38:12 59:12 61:21 62:7 66:8 66:8 84:22
objections [5] 31:9 67:21 85:7 85:15 85:21
observe [9] 24:7 30:24 30:25 33:18 34:11 34:24 39:14 46:21 75:23
observed [2] 33:18 76:3
observing [2] 33:25 47:7
obtained [6] 16:17 17:8 18:1 19:5 19:19 83:3
Obviously [1] 63:19
occasions [4] 17:8 29:2 30:17 77:14
occur [3] 34:19 45:21 75:16
occurred [11] 16:18 27:25 27:25 31:17 45:20 45:23 46:23 46:25 51:2 51:5 78:16
occurring [1] 48:15
occurs [1] 65:17
off [7] 46:18 47:14 48:4 49:7 50:8 54:2 54:4
offered [1] 14:1
office [39] 2:19 4:13 6:18 10:16 13:6 14:9 14:12 14:15 15:15 15:20 15:23 16:8 17:10 17:13 19:9 25:17 25:21 27:12 28:12 28:15 29:5 29:18 40:1 42:21 43:3 43:14 43:18 44:3 52:2 57:7 75:6 75:9 75:14 75:20 76:12 76:22 82:8 83:1 85:4
offices [13] 9:7 53:22 75:5 75:9 75:18 75:25 76:2 82:12 82:19 82:22 83:2 83:4 83:10
official [4] 30:20 30:22 33:16 76:11
offset [1] 57:11
Ohio [1] 45:7
once [4] 17:8 17:9 46:3 76:6
one [18] 10:25 12:13 16:18 34:16 35:1 35:7 37:4 50:23 51:10 53:20 60:18 61:8 61:11 65:2 74:23 77:20 83:5 83:6
onto [1] 40:18
opened [1] 18:6
Operations [7] 12:17 12:20 15:10 18:6 19:16 20:19 51:21
Oppenheimer [4] 2:13 4:8 6:12 9:8
opportunity [1] 36:7
opposed [4] 39:11 57:23 58:19 66:14
order [10] 21:9 25:3 25:6 66:3 66:24 74:23 74:24 75:2 76:23 77:2
ordered [1] 14:24
orders [2] 25:10 25:22
organized [1] 75:16
originally [1] 42:21
ORTIZ [1] 5:6
otherwise [1] 66:18
ought [1] 58:7
ours [1] 81:1
outside [7] 13:19 18:20 21:23 22:1 26:12 31:4 65:16
outstate [1] 65:18
own [2] 39:12 83:5

-P-

P.O [2] 2:10 6:9
package [2] 62:13 62:18
page [9] 7:3 79:14 80:5 80:6 80:22 80:24 81:11 81:11 81:14
pages [3] 8:12 8:15 79:8
paid [1] 40:22
Palestine [2] 63:15 63:23
paper [3] 39:17 42:11 68:13
papers [1] 81:3
paragraph [5] 71:10 71:13 71:14 72:1 72:3
paralegal [1] 23:13
paralegals [2] 61:9 61:11
pardon [1] 14:23
Park [19] 11:22 23:6 28:12 28:19 28:19 29:6 29:22 29:23 43:15 43:21 44:3 52:3 74:25 75:4 75:15 76:1 76:7 76:11 82:18
part [11] 17:20 17:22 21:18 21:19 27:1 28:1 54:14 72:16 73:14 78:1 85:10
partial [1] 79:3
particular [3] 13:18 14:7 67:10
parties [3] 72:19 88:16 88:18
parts [3] 66:10 66:12 85:3
pass [2] 64:9 74:18
Paul [21] 8:11 8:14 11:3 11:7 11:9 11:18 12:5 12:6 13:5 13:24 17:25 19:18 19:20 34:23 36:3 65:22 67:4 71:1 79:4 79:5 79:22
PENA [1] 1:8
penalty [1] 36:23
pend [1] 70:1
pending [1] 84:21
pension [1] 62:19
people [6] 24:16 33:25 34:17 38:1 59:7 83:5
perform [1] 24:17
performed [1] 25:8
performing [1] 73:22
perhaps [1] 24:2
period [2] 16:15 16:16
perjury [1] 36:24
permission [19] 19:9 19:11 19:14 19:21 20:4 20:7 20:11 21:8 21:11 27:11 27:14 35:12 38:7 40:16 45:21 45:22 47:2 47:5 51:23
permit [1] 77:6
permitted [2] 37:5 66:15
Perry [2] 2:9 6:8
person [5] 1:5 38:21 77:17 84:1 88:7
personally [5] 41:8 45:10 51:1 60:2 60:12
personnel [10] 10:19 12:9 12:10 14:23 26:12 32:7 65:15 67:8 67:9 73:9
phone [1] 63:22
phonetic [3] 11:18 14:21 65:4
phrase [2] 38:17 38:19
physically [1] 77:7
piece [1] 42:10
pieces [1] 81:3
Pitts [2] 47:10 47:23
place [21] 15:12 24:23 25:2 26:11 30:7 30:9 30:10 30:12 43:21 43:24 44:11 51:13 51:17 51:20 51:25 52:6 52:10 52:15 52:20 61:4 77:11
placed [11] 16:5 16:7 16:10 17:15 17:16 50:18 68:14 68:17 68:21 69:5 75:10
placing [1] 69:10
plain [1] 31:12
plaintiffs [6] 1:9 2:12 3:6 6:11 9:12 9:13
play [1] 73:21
played [1] 69:16
Plaza [5] 2:10 2:14 4:9 6:9 6:13
pleading [1] 70:14
pleadings [2] 67:2 70:2
PLYMOUTH-JEEP-EAGLE [1] 5:8
point [5] 19:6 21:13 76:19 81:6 82:6
pointed [1] 80:25
portion [1] 79:7
portions [1] 82:1
position [4] 10:10 10:12 12:6 12:14
possession [3] 54:11 68:10 83:19
possible [1] 51:13
practice [1] 36:19
preliminary [1] 57:6
preparation [3] 61:11 61:14 61:17
prepare [1] 48:13
prepared [2] 45:25 60:22
presence [1] 33:14
present [31] 2:12 6:11 10:10 10:12 11:17 11:18 13:7 18:20 21:17 22:5 22:6 22:22 23:20 24:14 30:16 31:5 31:6 31:7 33:17 35:20 37:6 38:5 46:23 46:25 49:21 57:1 70:1 77:17 77:21 78:19 80:19
presented [2] 50:7 51:8
presently [3] 12:8 23:9 49:13
preserved [1] 41:10
prestamped [2] 71:16 72:5
prevent [2] 14:13 63:13
previously [2] 48:23 75:5
primary [1] 70:3
privilege [4] 61:23 66:1 66:13 66:13
probe [3] 13:16 13:16 13:17
procedure [5] 15:11 49:12 50:15 52:18 54:9

proceed [1] 58:17
proceeding [2] 71:3 81:25
process [18] 21:24 22:21 22:25 24:20 24:23 24:25 25:1 26:3 26:10 26:22 26:24 27:1 27:2 27:4 27:6 27:21 35:5 85:10
product [7] 10:21 25:17 25:24 48:18 48:23 66:2 66:22
Professional [1] 64:25
prohibiting [1] 25:11
proper [1] 35:24
properly [1] 55:22
property [4] 18:14 18:15 27:18 27:19
protected [2] 66:3 66:23
provide [4] 67:12 77:25 78:3 78:5
provided [3] 57:23 74:13 78:23
providing [1] 10:18
provision [1] 82:20
prudent [15] 31:1 31:2 31:11 31:12 31:19 31:21 31:22 33:2 33:7 34:10 35:16 35:18 37:25 38:3 46:21
Public [7] 2:4 4:4 6:4 9:21 87:15 88:3 88:23
pure [1] 33:22
purportedly [1] 50:8
purpose [19] 13:22 18:13 21:24 24:9 24:13 31:2 31:19 31:23 32:5 33:8 33:25 34:25 35:6 35:24 36:5 36:5 47:7 70:3 72:15
purposes [4] 34:16 35:1 35:7 67:19
pursuant [1] 67:22
put [13] 9:9 43:18 51:13 51:16 51:25 52:6 52:10 52:15 52:20 63:11 66:11 76:12 81:3

-Q-

qualification [1] 26:21
qualified [1] 88:4
qualifier [1] 64:1
questions [8] 13:17 13:19 14:6 39:19 63:25 64:11 68:10 86:2
quite [1] 26:3
quote-unquote [1] 81:19

-R-

R [6] 2:14 4:8 6:13 9:19 9:19 9:19
R-i-d-e-l-l-a [1] 10:2
raincoat [1] 66:11
RAMIREZ [1] 1:15
Ray [5] 14:22 14:22 15:5 16:11 21:17
re [2] 8:3 8:5
read [10] 47:18 47:21 71:12 72:1 79:14 80:6 80:23 81:14 82:1 86:4
ready [1] 74:10
really [7] 34:8 36:6 36:11 36:14 38:14 38:15 56:13
rear [3] 57:11 57:17 69:2
reason [8] 18:9 60:4 84:11 84:18 85:3 85:9 85:11 85:16
reasons [2] 37:5 44:19
recalls [1] 56:14
receive [5] 62:18 64:19 78:17 78:20 85:22
received [4] 54:18 55:6 55:19 62:17
recollection [11] 12:22 14:10 15:16 17:19 26:6 30:5 30:6 30:11 49:21 55:23 77:13
recollections [1] 56:6
recommendations [1] 55:14
record [10] 9:5 9:10 47:21 54:3 54:4 54:6 64:3 65:11 68:11 88:12
recording [1] 59:6
records [7] 14:25 15:1 46:3 46:14 52:25 59:9 82:21
redouble [1] 80:11
reduced [1] 88:11
reference [3] 56:22 58:20 70:15
referenced [1] 59:24
references [1] 59:1
regard [10] 17:7 25:23 51:14 57:20 60:14 60:15 64:21 68:4 68:12 84:24
regarding [6] 13:23 53:1 68:10 69:15 70:11 78:23
Reitman [6] 2:23 2:23 4:18 4:18 6:22 6:22
relate [1] 66:25
related [2] 66:25 88:15
relating [2] 65:22 85:4
relative [1] 88:17
relatively [1] 51:15
relevant [1] 62:8
relief [2] 70:3 70:5
remember [3] 29:8 40:6 50:16
removal [2] 34:17 76:22
remove [1] 34:13
removed [20] 14:10 14:17 14:19 15:19 17:13 17:15 18:21 18:23 42:22 43:2 44:2 71:17 71:22 72:6 72:8 80:14 83:23 84:2 84:8 84:13
reorganized [1] 71:19
repeat [1] 47:17
repetitive [5] 31:24 32:9 33:9 34:1 38:12
replaced [4] 83:24 84:3 84:9 84:13
reporter [7] 42:9 42:13 42:16 47:20 64:7 70:23 79:3
represent [4] 9:12 44:8 57:2 63:8
representation [3] 13:2 46:20 47:4
representations [1] 78:8
representative [5] 38:5 47:11 47:25 82:2 83:3
representatives [4] 24:4 24:5 32:6 77:16
represented [5] 36:16 37:4 37:10 37:17 48:10
request [2] 28:7 66:16
requested [1] 40:16
requirements [1] 74:24
reserved [1] 67:22
resolve [1] 55:15
respect [3] 73:21 75:12 78:9
responded [2] 32:4 38:11
response [3] 65:20 67:17 81:20
responsibility [1] 10:15
responsible [3] 10:18 65:12 74:2
responsive [1] 32:2
rest [2] 46:8 80:12
result [1] 54:8
returned [1] 72:22
review [16] 24:10 29:9 29:14 35:1 35:8 35:11 35:11 36:4 36:10 36:16 36:17 37:7 72:16 77:7 77:18 78:2
reviewed [3] 77:12 78:24 82:2
reviewing [3] 77:3 77:23 78:11
Richard [3] 8:9 70:19 71:3
Rick [1] 49:24
Ridella [54] 1:21 2:2 3:21 4:2 5:21 6:2 7:4 9:7 10:1 10:3 11:1 13:2 14:8 16:13 30:2 31:2 32:1 32:14 32:23 33:12 36:18 38:13 38:20 42:19 48:16 49:5 49:10 54:7 56:1 61:1 61:25 62:5 62:21 63:21 64:14 65:19 66:21 68:1 70:8 71:9 72:12 72:25 79:11 79:20 80:22 81:11 81:24 83:16 84:6 84:11 84:18 85:22 87:12 88:8
Ridella's [2] 13:22 64:6
right [41] 13:12 14:16 16:20 16:24 17:11 17:22 19:17 20:7 20:16 22:13 24:15 26:7 26:10 30:8 31:6 33:3 34:12 36:20 37:16 37:18 38:25 39:6 39:13 41:4 42:8 42:24 43:4 44:21 45:3 46:12 49:16 52:9 53:20 54:11 55:5 55:18 56:1 60:20 62:21 63:17 75:8
Rita [5] 2:19 4:14 6:18 61:8 61:10
Roger [2] 5:8 14:20
role [2] 69:16 73:21
room [62] 11:24 18:3 18:8 18:10 18:13 18:17 18:20 18:24 19:5 19:8 19:25 20:3 20:6 21:14 21:18 21:21 21:23 22:7 23:17 24:5 26:8 27:23 28:11 28:15 28:21 29:1 29:5 29:13 29:13 29:14 29:18 29:20 30:3 30:5 30:9 30:13 30:17 33:16 33:20 33:21 34:17 36:3 40:10 50:19 68:15 68:18 68:21 68:25 69:2 69:4 69:7 71:23 72:9 72:10 73:4 75:8 75:24 76:4 76:10 76:13 76:17 83:8
Rough [1] 61:6
rules [1] 67:22

-S-

S [7] 2:3 4:3 6:3 8:1 57:14 88:3 88:23
Safety [4] 57:5 57:6 57:7 85:4
salary [3] 62:5 62:10 62:13
sanctity [1] 51:9
saw [1] 39:12
SAYETH [1] 87:1
says [3] 44:13 58:4 58:14
school [4] 5:7 64:15 64:18 64:23
scope [1] 84:23
Scott [1] 30:17
Seal [1] 88:21
seat [3] 57:9 57:9 57:17
second [4] 17:6 42:6 42:20 44:6
secondly [1] 78:7
secret [1] 68:5
secured [6] 18:10 69:11 70:19 73:3 73:4 75:8
security [47] 12:19 12:23 15:1 15:6 15:9 16:6 17:18 18:3 18:6 18:13 19:8 21:10 23:5 23:10 26:11 28:10 30:20 30:21 32:6 33:15 40:10 43:3 43:8 50:18 51:14 51:19 51:25 52:6 52:10 52:15 52:20 67:5 68:6 68:15 68:18 68:21 69:3 69:6 73:5 75:18 75:19 75:20 75:24 76:11 76:11 77:17 82:25

see [8] 21:15 26:21 34:24 34:24 44:13 44:14 56:12 63:17
seeing [2] 52:13 52:19
seek [2] 19:13 47:4
seeks [1] 70:5
seem [1] 31:10
selected [1] 22:24
senior [1] 10:12
sensitive [1] 21:2
sentences [1] 79:15
series [1] 39:19
server [5] 41:21 42:2 44:8 44:11 44:25
service [1] 83:3
serving [1] 10:24
set [2] 83:9 88:20
Seventh [3] 2:15 4:9 6:14
several [2] 26:4 26:4
Sharon [3] 23:3 23:12 74:6
Sheet [1] 8:3
Sheridan [133] 8:5 8:7 8:9 8:11 8:11 8:14 8:14 8:17 11:4 11:7 11:10 13:24 14:14 15:3 15:22 16:5 21:21 22:7 23:17 23:19 23:22 24:6 24:6 25:11 25:14 25:23 26:15 27:19 27:23 29:4 29:8 29:24 30:14 30:22 30:23 31:8 31:17 32:7 33:17 33:18 34:12 34:14 34:18 34:23 35:1 35:17 35:19 36:3 36:10 36:15 37:4 37:9 38:4 38:24 39:4 41:20 42:2 43:2 43:24 44:7 46:2 46:3 46:9 46:13 46:15 46:20 46:24 47:9 47:11 47:23 47:25 50:8 50:13 50:24 52:8 55:4 55:6 55:16 55:17 59:5 59:9 60:1 60:9 60:10 65:22 66:4 66:24 67:3 67:4 67:14 68:3 68:6 68:11 68:14 69:11 69:21 69:22 70:6 70:10 71:1 72:18 72:23 73:2 73:15 74:14 74:20 75:13 77:6 77:9 77:12 77:22 77:24 78:2 78:10 78:12 78:21 78:24 78:25 79:4 79:5 79:23 80:2 80:17 81:5 81:8 82:1 82:4 82:7 83:17 83:23 84:4 84:8 84:13
Sheridan's [56] 13:5 14:9 14:12 14:25 15:15 15:19 16:8 16:9 16:17 17:25 18:2 18:11 18:15 19:18 19:20 20:17 23:23 29:19 32:8 35:3 35:8 35:9 36:1 36:9 38:1 38:3 40:1 40:8 40:14 40:18 41:9 42:21 46:18 46:24 47:2 47:4 47:14 48:4 49:7 49:14 50:2 50:6 54:19 55:7 56:8 60:12 66:6 66:25 69:13 69:19 72:25 77:18 77:25 78:7 78:23 79:16
shield [1] 66:14
shortening [1] 67:19
shortly [2] 19:5 55:18
Showing [1] 79:11
sic [2] 21:16 71:11
side [3] 57:13 81:4 81:5
sign [1] 86:4
simple [1] 33:22
simply [4] 57:22 59:6 59:20 60:17
sit [1] 38:1
situation [1] 44:10
Sixteen [2] 10:7 10:9
slap [1] 42:11
SMITH [1] 5:6
Smuts [5] 11:18 12:5 12:6 12:8 67:10
software [1] 15:25
soliloquy [1] 60:6
sometime [2] 46:15 63:12
sorry [2] 54:14 65:6
Sosnick [3] 55:11 55:12 73:23
sought [1] 70:4
source [1] 68:7
South [3] 2:15 4:9 6:14
SOUTHERN [1] 1:1
Southfield [1] 65:2
space [2] 29:14 46:4
speaking [1] 80:9
special [4] 55:13 78:9 80:1 81:12
Specialists [3] 2:24 4:18 6:23
specific [2] 46:7 56:25
specifically [4] 56:8 56:18 60:25 68:1
specifications [1] 57:10
specificity [1] 46:11
specifics [1] 56:16
speech [1] 59:18
spell [1] 14:21
spelled [1] 41:17
spent [1] 60:5
split [1] 17:6
spoke [1] 45:19
SS [1] 88:1
staff [3] 10:12 82:19 83:5
Stamps [2] 75:19 75:22
standpoint [1] 35:10
starting [2] 39:3 80:6
state [9] 3:1 25:4 36:19 64:18 70:8 73:7 73:17 88:1 88:4
statement [2] 72:2 81:23
statements [4] 70:10 72:14 80:23 81:13
STATES [1] 1:1
status [1] 66:6
steps [2] 75:11 82:24
Steven [1] 10:14
STEVI [1] 5:3
sticker [2] 42:12 42:17
still [2] 21:17 59:25
Stogran [5] 14:20 14:24 15:4 16:11 21:16
stood [1] 44:17
storage [12] 16:5 16:8 16:10 17:16 17:17 17:17 40:15 50:18 69:4 73:4 75:24 83:8
stored [7] 18:3 18:17 40:9 50:20 76:5 76:7 76:14
Street [4] 2:15 4:9 6:14 85:23
strength [2] 57:9 57:10
strike [3] 12:13 23:25 41:25
studies [1] 57:15
study [1] 57:8
stuff [1] 81:3
subject [4] 13:4 13:18 13:20 14:7
subjects [1] 14:2
submitted [1] 41:18
subordinate [1] 51:21
Subscribed [1] 87:14
subsequent [8] 21:13 27:20 43:12 54:17 65:25 69:10 77:22 81:24
subsequently [3] 69:19 72:21 77:6
subtracted [2] 81:10 81:22
such [2] 20:16 85:2
Suite [6] 2:4 2:15 4:4 4:10 6:4 6:14
summarize [1] 75:11
superiors [1] 19:18
supervision [2] 38:7 88:12
supervisor [4] 10:13 17:25 18:1 23:10
supervisors [2] 20:18 69:9
supervisory [1] 73:9
supplied [1] 76:16
support [1] 83:5
survivability [1] 57:12
suspension [3] 68:4 69:14 69:17
swear [1] 58:16
switch [1] 39:16
sword [1] 66:14
sworn [7] 9:17 9:20 16:13 72:2 72:14 87:14 88:8

-T-

T [1] 8:1
table [1] 81:19
tail [2] 57:15 57:16
taking [2] 15:11 76:20
TAMMY [1] 5:2
Tampa [2] 25:4 25:6
team [3] 47:4 57:5 57:6
Technical [4] 15:7 42:23 43:9 44:15
TECHNICIAN [8] 2:23 4:18 6:22 9:4 9:16 54:2 54:5 86:6
Technology [15] 15:2 15:10 17:18 23:11 28:11 40:11 40:13 43:25 44:18 50:19 68:18 69:4 74:20 75:14 75:21
teeth [2] 31:18 31:20
telephonic [3] 2:1 4:1 6:1
ten [2] 53:15 53:25
terminated [1] 69:11
termination [5] 68:4 69:14 69:17 69:19 73:1
terms [3] 77:16 79:7 80:4
testified [5] 9:21 37:3 39:1 65:19 77:15
testify [5] 13:4 13:23 39:6 39:9 88:8
testifying [1] 63:14
testimony [5] 16:13 36:23 38:20 49:16 88:13
tests [2] 84:19 84:25
Texas [10] 1:1 2:11 2:12 5:8 6:10 6:11 62:25 63:2 63:15 66:15
thank [7] 53:13 54:1 54:17 65:9 66:20 81:24 86:3
thereafter [4] 19:6 50:21 71:18 72:7
therefore [1] 40:19
Third-Party [1] 1:16
Thomas [4] 8:4 55:1 55:2 64:4
thought [1] 34:20
three [13] 20:1 21:8 22:24 26:19 29:10 30:16 33:10 61:19 63:10 63:10 63:24 77:13 79:18
through [25] 8:12 8:15 19:9 30:23 32:8 35:17 35:21 39:3 39:8 43:7 43:7 43:13 60:12 60:23 73:13 79:8 79:17 80:6 80:7 80:12 80:24 81:15 81:16 81:18 81:21
Tim [3] 2:23 4:18 6:22
times [3] 16:20 29:10 33:11
Today's [1] 9:4
together [1] 53:10
took [17] 18:24 25:2 26:3 26:5 26:11 26:23 30:7 30:9 30:10 30:12 39:1 39:2 39:25 43:24 49:12 51:19 83:19
total [1] 62:13
touched [2] 50:24 51:11

toward [1] 23:21
towards [1] 24:8
trade [1] 68:5
transcribe [1] 60:5
transcript [5] 67:20 79:4 79:8 80:7 86:5
transfer [3] 49:12 75:12 82:14
transport [1] 83:7
transportation [1] 15:1
transported [6] 15:5 28:2 28:3 28:8 28:9 29:22
TREAT [5] 3:4 3:4 3:4 3:5 3:5
trial [8] 13:20 14:1 50:11 61:3 62:23 63:5 63:9 63:14
tried [1] 63:15
Troy [8] 2:5 4:5 6:5 9:1 9:8 82:12 82:22 83:10
truck [3] 75:24 76:4 76:10
true [1] 88:12
truthfully [1] 88:8
try [1] 32:2
trying [3] 32:25 33:5 33:7
turning [1] 71:9
twice [1] 32:4
two [12] 16:20 17:8 22:13 26:5 26:23 29:10 61:6 63:10 75:16 75:17 79:15 83:6
type [1] 79:7
typewritten [1] 88:11

-U-

unauthorized [1] 37:7
unaware [1] 25:6
under [8] 16:13 25:3 36:5 36:23 66:15 76:7 76:8 88:11
understand [11] 13:21 17:24 36:22 38:20 39:9 39:19 47:9 47:22 49:16 53:11 73:17
UNITED [1] 1:1
University [2] 64:17 64:18
unless [1] 58:15
unloaded [1] 76:16
unsupervised [1] 37:7
untoward [2] 23:21 24:8
up [6] 15:5 17:6 26:8 47:3 51:18 73:1
UPC [1] 72:10
UPS [2] 71:22 72:9
used [3] 35:10 46:15 69:8
utilized [1] 68:14

-V-

V [2] 8:11 8:14
value [1] 62:15
Van [1] 65:3
Vasher [4] 23:3 23:12 24:3 74:7
vehicle [1] 83:7
versus [1] 60:6
video [12] 2:23 2:23 4:18 4:18 6:22 6:22 9:4 9:6 9:16 54:2 54:5 86:6
videotape [5] 20:16 20:20 20:21 21:1 24:19
videotaped [7] 2:1 4:1 6:1 20:12 20:14 27:4 27:5
videotapes [1] 52:9
videotaping [2] 52:7 77:2
VII [3] 2:14 4:9 6:13
visit [1] 70:18
vs [20] 1:10 1:13 3:7 5:5 8:5 8:7 8:9 8:11 8:14 8:17 43:24 50:6 55:4 55:6 55:17 61:3 62:23 71:1 79:5 80:2

-W-

wait [1] 56:11
Wall [1] 85:23
watch [3] 26:24 35:17 38:1
Watts [92] 2:9 6:8 7:5 7:7 9:11 9:11 9:24 13:13 13:15 13:25 14:5 14:8 24:9 24:24 26:16 29:7 29:21 31:13 32:1 32:5 32:10 32:17 32:23 33:12 33:13 34:2 34:8 34:9 35:22 37:23 38:9 38:13 38:16 39:1 40:4 41:23 42:8 42:10 42:17 42:19 45:13 46:11 47:16 47:18 48:8 48:9 49:4 49:15 50:4 51:12 53:4 53:9 53:14 53:17 53:19 53:24 54:7 54:16 56:13 56:16 56:17 56:21 57:25 58:9 58:15 58:19 58:22 59:12 59:13 59:16 60:2 61:24 62:3 62:5 62:9 62:12 63:21 64:8 65:6 65:9 66:7 67:16 67:24 68:9 71:6 84:17 85:1 85:2 85:8 85:18 85:22 86:2
Watts' [2] 65:20 70:17
Wayne [2] 3:2 64:18
week [1] 61:4
weeks [4] 26:4 61:6 63:10 63:24
WESTON [1] 5:4
wherein [1] 54:20
WHEREOF [1] 88:20
Wilhelm [7] 49:24 50:1 50:7 50:10 51:6 52:22 52:24
Winter [32] 8:9 11:19 12:14 17:25 18:8 18:10 18:12 18:25 19:4 19:10 19:15 19:19 20:10 20:18 21:1 21:6 23:16 27:13 35:23 38:6 39:8 40:13 43:6 43:13 45:16 45:19 45:20 47:1 70:19 71:3 71:25 72:2
Winter's [1] 36:17
winters [1] 35:11
wishes [1] 66:10
wit [1] 88:7
within [7] 10:10 10:16 15:2 15:6 16:7 65:12 65:17
without [20] 19:21 19:21 20:3 20:4 20:7 20:11 20:11 21:7 21:8 21:11 23:17 27:14 35:12 35:13 38:7 38:7 51:22 51:23 65:25 66:21
witness [32] 2:2 4:2 6:2 7:3 9:16 10:24 32:11 32:15 34:3 34:7 40:6 42:18 47:19 48:7 51:8 56:15 58:17 58:19 61:2 61:22 62:10 62:22 63:5 64:10 65:8 66:9 66:16 67:18 85:16 86:4 88:13 88:20
witness's [1] 84:24
Wolff [4] 2:13 4:8 6:12 9:8
words [3] 17:1 33:4 35:10
worked [7] 10:5 14:14 15:3 23:4 28:18 64:24 65:1
works [5] 22:10 41:3 44:23 45:3 45:7
world [3] 11:23 28:14 82:17
Wright [23] 13:1 22:2 22:6 22:11 23:14 24:4 26:13 29:23 30:18 30:19 33:15 48:11 48:17 48:22 50:23 74:3 82:12 82:14 82:23 83:2 83:4 83:10 83:13
write [2] 42:5 42:11
written [2] 37:13 55:24

-X-

X [2] 7:1 8:1

-Y-

Y [1] 9:19
year [6] 62:11 62:14 62:17 65:2 65:6 82:11
years [2] 10:7 10:9
Yep [1] 38:9
yesterday [1] 60:7
yet [2] 38:3 60:7
yourself [3] 24:2 26:12 43:20

-Z-

Zarowitz [2] 57:16 57:17

ATTACHMENT AD

EXPERT WITNESS REPORT - 2 January 2012 REVISION

Kline v. Loman Auto Group, Victoria Morgan-Alcala, et al.

Page Range 10

Pages 887 – 897

CENTER FOR AUTO SAFETY
1825 CONNECTICUT AVENUE NW SUITE 330 WASHINGTON DC 20009-5708
202-328-7700 ◆ www.autosafety.org

September 1, 2011

Sergio Marchionne, Chairman
Chrysler Group LLC
1000 Chrysler Drive
Auburn Hills MI 48321-8004

Dear Chairman Marchionne:

On May 8, 2011, you gave a commencement address at the University of Toledo in which you stressed social responsibility. You charged: "I believe that the future is not just the responsibility of governments. It's an individual and collective responsibility. It's a challenge that calls for a concerted and shared commitment. Closing our eyes, or thinking that finding a solution is someone else's role, makes us part of the problem."

How apt that you made this address in Toledo the home of the Jeep and where the Grand Cherokee is made because the terrible and rising fire death toll of the 1993-2004 Grand Cherokee represents the largest social responsibility facing Chrysler today. Like a toxic waste site, these vehicles are legacy of the old Chrysler which the new Chrysler is called upon to clean up. As you told the Toledo graduates, "The essence of leadership, when all is said and done, is the personal assumption of the moral duty to be proactive in building our future." The future of the new Chrysler lies in not only the marketability of its new models but also how it handles the legacy of its older models, particularly the toxic 1993-2004 Jeep Grand Cherokee depicted in the hauntingly surreal photo of the burned out hulk of the 1997 Grand Cherokee that terribly burned the Austin sisters and burned Jose Sierra to death. Note the lack of structural damage showing there would have been no injuries but for the fire.

Picture 1 – Austin/Sierra Crash Post Accident Photos

The Safety Problem

The 1993-2004 Jeep Grand Cherokee is a modern day Pinto for soccer moms. As with the Pinto, the fuel tank is located behind the rear axle: a dangerously vulnerable area in the rear impact crush zone. The tank is made of plastic and has a fuel filler hose that is vulnerable to separation in a rear crash. The tank itself has no valve that would ensure containment of fuel in the event of such a separation. In the United States alone from 1993 through 2009, there have been 184 fatal fire crashes in Jeep Grand Cherokees that have resulted in 269 deaths and numerous burn injuries. At least 78 of the deaths are due to fire according to available medical and government records with the real number of fire deaths higher.

In 2005, under pressure from its merger partner Daimler-Benz, Chrysler moved the fuel tank forward of the rear axle to the safer location used almost universally in light motor vehicles. Despite the fuel tank not only being behind the rear axle but also extending below the rear bumper, a 3 mm fuel tank shield or skid plate produced by Chrysler was not made standard on any 1993-2004 Grand Cherokee. The 1999-2004 Grand Cherokees had an inadequate 1 mm brush guard that did no more than what its name implied – guarded the tank from brush.

In 1978, Chrysler Automotive Safety Manager LL Baker laid out the basic principles for fuel system safety for Chrysler cars and trucks based on the Ford Pinto which included moving the fuel tank ahead of the rear axle and ensuring the filler neck, cap and tube remained attached to the fuel tank to avoid fuel leakage.[1] In SUVs, Baker recommended a protective impact deflection system for the fuel tank recognizing the mismatch between bumpers that allow lower passenger car to come under and impact the fuel tank if it could not be relocated forward of the rear axle in an SUV. Yet none of these recommendations were carried out in the 1993-2004 Grand Cherokee. If they had, many Grand Cherokee crash fire victims would have lived.

The vulnerability of the fuel tank is exacerbated by the dangerous design of the fuel filler hose. In 1993-1998 Grand Cherokees, the filler hose goes through the frame rail unlike any other passenger vehicle. In the event of a rear impact, the filler hose is likely to be pulled out of the fuel tank as the frame rail bends upward. In 1999-2004 Grand Cherokees, Chrysler relocated the filler hose under a redesigned, solid frame rail and improved the connection between the tank and filler hose. With this revised design, the filler hose became vulnerable to separating from the filler cap housing and inlet pipe at its upper end. The plastic fuel tank itself is vulnerable to puncture from sharp objects that are part of either vehicle in a rear impact crash. None of the 1993-2004 models has an effective check valve in the fuel tank to stop fuel flow when the filler hose is pulled loose. Other similar vehicles at that time such as the Ford Explorer and Oldsmobile Bravada had check valves that prevent fuel flow if the filler hose pulled loose from either the tank or the filler neck.

[1] "Fuel System Design – Chrysler Passenger Cars And Trucks," Memo from L.L. Baker, Manager Automotive Safety, to R.M. Sinclair, Director International Product Development, August 24, 1978. (Attachment A from Sheridan Submission to NHTSA Administrator Strickland, February 11, 2011.

Picture 2 – Ineffective Grand Cherokee Check Valve

Picture 3 – 2002 Ford Explorer Check Valve

Grand Cherokee Has Highest Fire Death Rate of Similar SUV's – 20 Times Explorer

Chrysler's own analysis of rear impact fire deaths in NHTSA's Fatal Accident Reporting System database (FARS) shows the Jeep Grand Cherokee to have by far the worst fire death rate of any SUV with more than one fire death. Chrysler's FARS analysis shows 22 fatal rear crashes in nine different 1993-2004 SUVs with fire as the Most Harmful Event - 12 of them in 1993-2004 Jeep Grand Cherokee's. Three of the nine SUVs have no fatal rear MHE fire crashes and three have only one fatal rear MHE fire crash. The Jeep Grand Cherokee with a MHE fire death rate of 0.44 per million vehicle years of use is by far the worst performing SUV in rear impact fire crashes. The Grand Cherokee's biggest competitor, the Ford Explorer with a fuel tank in front of the rear axle had a MHE fire death rate of only 0.02 per million vehicle years of use, making the Grand Cherokee twenty times higher than the Explorer.[2]

The Grand Cherokee fire death rate would be even higher if Chrysler had included the three other rear fire crashes identified by CAS where an occupant of a Grand Cherokee died by fire. And still higher yet if deaths to the occupant in the striking vehicle were included as NHTSA did in the FMVSS 301 rulemaking and the GM Pickup Defect Investigation. Chrysler's FARS analysis did not include Jose Sierra's burn death because he was in the striking vehicle. (See Picture 1.) Nor did it include the burn death of 4 year old Cassidy Jarmon even though Chrysler confidentially settled the case.

[2] See Chrysler presentation to NHTSA, "1993-2004 MY Grand Cherokee Chrysler's Analysis of FARS Data" http://www-odi.nhtsa.dot.gov/acms/cs/jaxrs/download/doc/ACM17259863
and Center for Auto Safety letter to NHTSA Administrator David Strickland:
https://docs.google.com/viewer?a=v&pid=explorer&chrome=true&srcid=0B08yVa_bKjAVODZhNjMzYzYtODQ2Ny00MDM4LTk4OWMtNGVkNDc4ZDIxYmI4&hl=en_US

Picture 4 – Cassidy Jarmon

Picture 5 – Jarmon Crash Photo

Old Chrysler's Defect Knowledge

Chrysler engineers knew about the deadly defects in the Jeep Grand Cherokee early on. Crash tests conducted by the company demonstrated failures of the fuel tank, frame rail and filler hose connections coupled with fuel flow from the tank unstemmed by any effective check valve. For example, Chrysler Test 5380 had the fuel filler pull out of the fuel tank with a massive leak unstemmed by an effective check valve used by other manufacturers.[3]

Chrysler engineer Judson Estes discussed the problems of both filler hose and fuel tank location in a deposition in Austin- Sierra v. Chrysler.[4] Mr. Estes' deposition showed throughout that the behind the rear axle location of the fuel tank in the crush zone led to repeated contact with transmission and suspension components in crash tests. (Id. at 72, 75.) Mr Estes also testified that in crash test 5380 the connection plug holding the fuel hose and vent lines pulled loose from the fuel tank allowing the fuel to flow out of the tank. He attributed this to a failure of the ultrasonic weld securing the plug fitting to the fuel tank. (Id. at 101-04.) This is precisely the failure mode shown in the FHWA crash test depicted below.

[3] Attachment B is test 5380.
[4] A copy of the deposition is posted at http://www-odi.nhtsa.dot.gov/acms/cs/jaxrs/download/doc/ACM13345717

Picture 6 – Fuel Filler/Emission Control Line Plate Failure

Mr. Estes went on to testify that the frame rail bent upward and closed on the fuel hose and vent line pulling them away from the tank. (Passim 60-101.) Mr. Estes testified that a frame rail reinforcement bracket was added to keep the frame rail from closing on the fuel lines. (Id. at 117.) The reinforcement bracket added to strengthen the frame rail is shown below.

Picture 7 – Reinforcement Bracket

FHWA and CAS Vehicle to Vehicle Crash Tests

Three recent crash tests of various models of these vehicles conducted by the George Washington University for the Federal Highway Administration (FHWA) and by the Center for Auto Safety have confirmed and demonstrated that the design flaws and vulnerabilities of the fuel tank and its connections result in major fuel spills and fire in rear impacts. All three crash tests were vehicle to vehicle 30% offset rear impacts similar to new Federal Motor Vehicle Safety Standard (FMVSS) 301 with the striking vehicle being a Ford Taurus. Two of the tests were run at the 50 mph impact velocity in FMVSS 301 while the third was run at only 40 mph.

On the earlier models (through the 1998 model year) the filler and the vent hoses are routed through the left rear frame rail while in the later models, they are routed under the left rear frame rail. The earlier models had no standard shield protecting the fuel tank. On the later models, there is either a 1 mm brush guard or a 3 mm skid plate covering the underside of the tank. The skid plate is bolted to the rear frame rails so that the two hoses entering the tank are effectively tied to the frame rail. If the frame rail and fuel tank do not move together in a crash, this forces a separation of the filler hose from the tank. If they do move together, the filler hose can pull lose from the fuel filler inlet.

Picture 8 – Grand Cherokee Fuel Lines Routed through Frame Rail

When these vehicles were marketed, they were among a very few that continued to place the fuel tank behind the rear axle, and they are the only known vehicles that route the fuel filler through the frame rail. Manufacturing the tank out of plastic also makes it vulnerable, in the event of a fuel fire, to being melted or burned so that it can no longer contain any fuel.

The crash tests conducted at the FHWA Turner-Fairbank facility and at KARCO Engineering highlighted significant shortcomings of the Grand Cherokee fuel tank design beyond its location and the routing of fuel lines. The tank has no effective check valve at the entry point of the fuel filler hose that would seal the tank and prevent fuel leakage in the event of a separation of the fuel filler hose from the tank. While it does have a check valve that can prevent backflow into the filler line if the pressure in the tank is greater than atmospheric pressure, that check valve will open once the pressure on either side of the valve is equalized. Thus, in the first of the KARCO Engineering tests, this valve opened once the vehicle was rolled in the spit test rquired by FMVSS 30, permitting all of the fuel (actually Stoddard fluid used for testing because it is not flammable) in the tank to flow out. (See Picture 2 for Chrysler check valve.)

Picture 9 – Stoddard Fluid Leaking from Fuel Tank

The fuel filler and vent lines are attached to a small plastic plate that is "welded" to the tank. In the Turner-Fairbank test of a 1995 Grand Cherokee equipped with the optional 3 mm skid plate, this "welding" failed completely and the entire plate came free of the tank. (See Picture 6.) This is precisely the failure mode identified by Chrysler in crash test 5380 and discussed by Chrysler engineer Judson Estes. The back pressure check valve came out along with the attached hoses. This failure left a large hole in the left side of the tank permitting

massive loss of fuel during the impact. The Delta V (change of speed experienced by the Grand Cherokee in the crash) was 23 mph, far below the 35 mph Delta V in NHTSA's New Car Assessment Program which vehicle occupants survive. But for fire, these tests show the occupants should easily survive the crash forces in 50 mph rear impacts.

In the first KARCO Engineering test at 50 mph 30% offset rear impact, the upper end of the fuel filler hose of the 1999 Grand Cherokee came off its attachment to the fuel filler inlet tube. (See Picture 10 below.) When the vehicle was rolled in the spit test required by FMVSS 301, the fuel was free to flow out through the filler tube as shown in Picture 9. In this test, the Delta V was 26 miles/hour. Like the FHWA test, this vehicle was equipped with the 3 mm skid plate.

Picture 10 – Fuel Filler Detachment

Rollover fires are all too common in Jeep Grand Cherokees with the FARS database showing 23 deaths in 15 fatal fire crashes involving rollover of 1993-2004 Grand Cherokees. Of these, 21 were coded by FARS as MHE fire which undercounts actual fire deaths. For example, Bennett Hartsel was burned to death according to the autopsy report in the rollover of the 2002 Grand Cherokee which is shown in Picture 11 below. The lack of an effective check valve used by other manufacturers in their SUV's could have prevented many of these fire deaths.

Picture 11 – Bennett Hartsel Crash

The second KARCO Engineering test of a 1996 Grand Cherokee was conducted at a substantially reduced impact velocity of 40 mph to demonstrate the vulnerability of Grand Cherokees with fuel tanks behind the rear axle in lower speed impacts. This Grand Cherokee was the standard vehicle without the optional plate under the tank. The Delta V was only 21 mph which is a clearly survivable crash if there were no fire. The filler hose remained attached to the tank and to the filler inlet but the tank ruptured and spilled its entire fuel content immediately. (See Pictures 12 & 13 below showing the ruptured tank and the fuel pouring out of the tank into collection containers.).

Picture 12 – 1996 Grand Cherokee Punctured Fuel Tank

Picture 13 – Fuel Leakage from Fuel Tank

The 1993-2004 Jeep Grand Cherokee designed by the old Chrysler Corporation and corrected by relocation of the fuel tank in 2005 by DaimlerChrysler has and will continue to claim a terrible toll of burn victims. As the CEO of the new Chrysler Group LLC who has spoken out about the social responsibility of leaders not to close their eyes to problems but to find solutions, the Center for Auto Safety and the families of victims call on you to recall all 1993-04 Jeep Grand Cherokees and remedy the defects in their fuel systems so this defect does not claim any more victims.

Sincerely,

Clarence Ditlow

Executive Director

ATTACHMENT AE

EXPERT WITNESS REPORT - 2 January 2012 REVISION

Kline v. Loman Auto Group, Victoria Morgan-Alcala, et al.

Page Range 2

Pages 899 – 900

CHRYSLER

October 14, 2011

Clarence Ditlow
Executive Director
Center for Auto Safety
1825 Connecticut Ave NW
Suite 330
Washington, D.C. 20009-5708

Dear Mr. Ditlow:

Your letter to Sergio Marchionne of September 1, 2011 has been referred to me for response. As you know, NHTSA opened PE10-031 to investigate whether the fuel system of 1993-2004 Model Year Jeep Grand Cherokee vehicles presents an unreasonable fire hazard in rear impact crashes. The contentions you made in your letter to Mr. Marchionne have also been part of various submissions the Center for Auto Safety has made to the PE10-031 docket and, as such, are being evaluated by NHTSA.

Chrysler Group LLC (Chrysler Group) has responded to NHTSA's information requests in connection with PE10-031. Chrysler Group's examination of the fuel system design history of 1993-2004 Model Year Jeep Grand Cherokee vehicles supports its belief that sound engineering judgment and due care were used in the design and development of the fuel systems of these vehicles. The vehicles were tested to ensure that they exceeded the applicable rear impact requirements of FMVSS 301.

The vehicles' fuel system performance has been closely monitored in the field over the past nineteen years with over 300 billion miles driven by these vehicles. Rear impacts resulting in fire are extremely rare. All of the Jeep Grand Cherokee rear impact collision fires that Chrysler Group has investigated over the past nineteen years involved high energy rear impact collisions with substantially higher energy levels than the applicable FMVSS 301 energy levels. None of these fires were attributable to a design or manufacturing defect in the fuel system.

Further, Chrysler Group has analyzed publicly available statistical data involving over 21,000 rear impacts in the subject vehicles and their peers. It is apparent from this data that there is no meaningful statistical difference of rear impact and/or rollover crash events resulting in fire between the 1993-2004 Jeep Grand Cherokee and its peer vehicles.

Based on Chrysler Group's analysis of the design and testing of the vehicles, its investigation of accidents in the field, and its analysis of statistical data, Chrysler Group

has concluded that the 1993-2004 Jeep Grand Cherokee vehicles are neither defective nor do their fuel systems pose an unreasonable risk to motor vehicle safety in rear impacts.

Sincerely,

David D. Dillon
Senior Manager
Regulatory Affairs - Product Investigations and Campaigns

ATTACHMENT AF

EXPERT WITNESS REPORT - 2 January 2012 REVISION

Kline v. Loman Auto Group, Victoria Morgan-Alcala, et al.

Page Range 2

Pages 902 – 903

CENTER FOR AUTO SAFETY
1825 CONNECTICUT AVENUE NW SUITE 330 WASHINGTON DC 20009-5708
202-328-7700 www.autosafety.org

November 17, 2011

Sergio Marchionne, Chairman
Chrysler Group LLC
1000 Chrysler Drive
Auburn Hills MI 48321-8004

Dear Chairman Marchionne:

On September 1, 2011, the Center for Auto Safety (CAS) asked you to recall all 1993-04 Jeep Grand Cherokees for fuel fed fires in rear impacts that have claimed far more lives than the infamous Ford Pinto. Just yesterday, November 16, the Jeep Grand Cherokee claimed yet another life and severely burned another person on I4 in Orlando FL. If Chrysler had recalled the 1993-04 Grand Cherokee as CAS requested or as Ralph Nader requested in January 2011, the Orlando Grand Cherokee occupants would not have been burned. The tragic question is how many more fatal fire crashes will it take before Chrysler recalls this Pinto for soccer moms. The known toll now stands at 185 fatal fire crashes with 270 deaths and numerous burn injuries. At the time of its recall, NHTSA reported only 28 deaths in fire crashes of Ford Pintos.

Chrysler responded to CAS' request to recall the Grand Cherokee and save lives with a letter long on rhetoric and short on facts from Chrysler's recall manager. (See attachment A.) Nowhere does Chrysler address the fact that NHTSA FARS data show the Grand Cherokee has a fatal rear impact fire death rate 20 times higher than the Ford Explorer. Nowhere does Chrysler address the fact that crash tests done by FHWA and CAS show the Grand Cherokee suffered catastrophic fuel system failures at energy levels both significantly below and slightly above present FMVSS 301 levels. Nowhere does Chrysler address the fact the 70 mph FHWA crash test on a Ford Explorer had an energy level nearly twice that of FMVSS 301 and suffered no breach of the fuel system. (See Table below.)

Test	Impactor	Impactor Weight	Impactor Speed	Crash Energy
old FMVSS 301	flat face barrier	4,000 pounds	30 mph	121,000 lb-ft
new FMVSS 301	contoured barrier	3,015 pounds	50 mph	253,000 lb-ft
FHWA Explorer	2003 Taurus sedan	3,110 pounds	68 mph	483,000 lb-ft
FHWA Grand Cher.	2000 Taurus SW	3,296 pounds	49.7 mph	274,000 lb-ft
First Karco test	1987 Taurus sedan	3,387 pounds	51.4 mph	301,000 lb-ft
Second Karco test	1988 Taurus sedan	3,364 pounds	40.7 mph	187,000 lb-ft

Chrysler's failure to respond to CAS' request to recall the Grand Cherokee and save lives is inexplicable other than as a defensive tactic in view of the cooperative relationship between Chrysler and CAS in the past. In 1992, CAS conducted an independent crash test of a 1993 Chrysler L/H sedan provided by Chrysler at a DOT approved test facility. (Attachment B.) If

Chrysler accepted our crash test then, why not accept our crash tests now, all done at DOT approved facilities.

In December 1990 CAS asked then Chrysler CEO Lee Iacocca to take responsibility for A-604 Ultradrive transmission failures by redesigning it and helping consumers who had already bought one of these lemons. In response Mr. Iacocca personally came to Washington to meet with CAS. Chrysler Vice President Theodore Cunningham made specific, public promises from Chrysler to repair all Ultradrive transmissions, waive the $100 deductible in the warranty, provide loaners, buy back any 1989-91 models with Ultradrives that could not be fixed and to improve the quality of the Ultradrive in future models. At the same Chrysler invited CAS Executive Director Clarence Ditlow to make a presentation to Chrysler's Board of Directors on safety and consumer issues. (Attachment C.)

Our September 1, 2011 letter to you said: "As the CEO of the new Chrysler Group LLC who has spoken out about the social responsibility of leaders not to close their eyes to problems but to find solutions, the Center for Auto Safety and the families of victims call on you to recall all 1993-04 Jeep Grand Cherokees and remedy the defects in their fuel systems so this defect does not claim any more victims." The Orlando Grand Cherokee crash on November 16 shows our prediction was correct. How many more people will be killed and tragically burned in Grand Cherokee fire crashes before Chrysler agrees to a recall? As outlined by Ralph Nader to Fiat Chief Engineer Harald Wester in Milano, Italy on January 26, the recall remedy is simple and inexpensive.

> *Just like Ford recalled the Pinto, Fiat needs to recall the Grand Cherokee and remedy the fuel tank defect by installing (1) an optional frame rail reinforcement bracket on the 1993-1998 Grand Cherokee, (2) optional skid plates on all 1993-2004 Grand Cherokees that do not have them, (3) an effective check valve system to shut off the flow of gasoline if the filler hose is pulled out of the fuel tank or filler neck, and (4) additional shields to protect the fuel tank from sharp objects in the crush zone impacts. To ensure these inexpensive remedies are adequate, Fiat should conduct a public crash test program just as was done for the Ford Pinto recall.*

Once again, the Center for Auto Safety asks you as Chrysler's CEO to do the right thing and recall the 1993-2004 Jeep Grand Cherokee.

Sincerely,

Clarence Ditlow
Executive Director

ATTACHMENT AG

EXPERT WITNESS REPORT - 2 January 2012 REVISION

Kline v. Loman Auto Group, Victoria Morgan-Alcala, et al.

Page Range 2

Pages 905 – 906

National Automobile Dealers Association

Ethics Guide

In addition to the Code of Ethics poster, NADA has published an Ethics Guide that focuses on four key areas of dealership operations: sales, service, financial services and advertising:

1. ADVERTISING

This dealership is committed to advertising its products and services in a clear, conspicuous and accurate manner that fully complies with applicable legal requirements. This includes disclosing credit terms in accordance with the federal Truth in Lending Act and consistent with state and local law.

2. FINANCIAL SERVICES

Implicit in these standards is the requirement that NADA members comply fully with all federal, state, and local laws governing their businesses.

At this dealership, the finance and insurance professionals will at all times...

- Disclose fully to customers the costs, terms, and contractual obligations of credit and lease transactions. Documents will be written in a simple, plain, and unambiguous manner to the extent permitted by federal and state law.
- Offer optional insurance or other optional products in a clear and informative manner. Any purchase of such a product must reflect a voluntary choice by the consumer.
- Advertise financial services products in a clear and non-deceptive manner.

3. SALES

Implicit in these standards is the requirement that NADA members comply fully with all federal, state, and local laws governing their businesses.

At this dealership, the sales professionals will at all times...

- Embrace the spirit and the letter of the law governing the retail sales of new and used vehicles.
- Be honest and truthful when dealing with customers.
- Have a thorough knowledge of the product and be able to apply that knowledge to help satisfy the transportation needs of the customers.
- Provide each customer with a thorough and clear explanation of the steps involved in the purchase or lease of a vehicle and follow those steps diligently.
- Always treat each customer in a professional manner.
- Be responsible for the prompt performance of post-sale administrative and delivery procedures.

- Represent the dealership and the automobile industry in a professional manner.

4. SERVICE

Implicit in these standards is the requirement that NADA members comply fully with all federal, state, and local laws governing their businesses.

At this dealership, the service professionals will at all times...

- Perform high quality repair service at a fair and competitive price.
- Employ trained and skilled technicians.
- Furnish an itemized invoice for parts and services that clearly identifies any used or remanufactured parts. Replaced parts may be inspected upon request.
- Have a sense of personal obligation to each customer.
- When appropriate, recommend corrective and maintenance services, explaining to the customer which of these are required to correct existing problems and which are for preventive maintenance.
- Provide each customer a price estimate for work to be performed, upon request, or as required by law.
- Make available copies of any warranties covering parts or services.
- Obtain prior authorization for all work done.
- Notify the customer if appointments or completion promises cannot be kept.
- Maintain customer service records as required by law.
- Exercise reasonable care for the customer's property while in the dealership’s possession.
- Maintain a system to provide for a prompt response to all customer complaints.
- Uphold the highest standards of service in our profession.

Purchase Ethics Guide Online

The Ethics Guide pamphlet is available for purchase by NADA members in bulk quantities of 25 pamphets. To purchase online click here, or contact NADA Management Education at (703) 821-7227, or e-mail: me@nada.org.

Return to Code of Ethics page

© 2010 National Automobile Dealers Association
8400 Westpark Drive, McLean, VA 22102, (703) 821-7000, help@nada.org

ATTACHMENT AH

EXPERT WITNESS REPORT - 2 January 2012 REVISION

Kline v. Loman Auto Group, Victoria Morgan-Alcala, et al.

Page Range 11

Pages 908 – 918

Corporate Organization Directory

CHRYSLER
CORPORATION

CHRYSLER CORPORATION OFFICERS

Eaton, R. J.	Chairman of the Board and Chief Executive Officer
Lutz, R. A.	President and Chief Operating Officer
Denomme, T. G.	Vice Chairman and Chief Administrative Officer
Valade, G. C.	Executive Vice President and Chief Financial Officer
Boltz, R. R.	Vice President - Product Strategy & Regulatory Affairs and General Manager - Small Car Operations
Capo, T. P.	Vice President and Treasurer
Cappy, J. E.	Vice President - Chrysler Technologies and Rental Car Operations
Castaing, F. J.	Vice President - Vehicle Engineering and General Manager - Power Train Operations
Cunningham, T. R.	Executive Vice President - Sales & Marketing and General Manager - Minivan Operations
Donlon III, J. D.	Vice President and Controller
Ewasyshyn, F. J.	Vice President - Advance Manufacturing Engineering
Fountain, W. F., Jr.	Vice President - Government Affairs
Gale, T. C.	Vice President - Product Design and International Operations
Gallagher, T.	Vice President - Employee Relations
Henson, G. L.	Vice President - Large & Small Car, Jeep & Truck Assembly and Stamping Opns
Herlitz, J. E.	Vice President - Product Design
Holden, J. P.	Vice President - Quality, Capacity and Process Management
Lewis, H. A.	Vice President - Finance Strategy and Planning
Liberatore, R. G.	Vice President - Washington Affairs
Liebler, A. C.	Vice President - Marketing and Communications
Lobo S., C.	Vice President and President & Managing Director - Chrysler de Mexico S.A.
O'Brien, W. J.	Vice President, General Counsel and Secretary
Oswald, K. M.	Vice President - Corporate Personnel
Pappert, E. T.	Vice President - Sales and Service
Pawley, D. K.	Executive Vice President - Manufacturing
Richie, L. C.	Vice President and General Counsel - Automotive Legal Affairs
Robertson, B. I.	Vice President - Engineering Technologies and General Manager - Jeep/Truck Operations
Rushwin, S. T.	Vice President - International Manufacturing & Minivan Assembly Opns
Sidlik, T. W.	Vice President and Chairman - Chrysler Financial Corporation
Stallkamp, T. T.	Vice President - Procurement & Supply and General Manager - Large Car Operations

SALES AND MARKETING AND MINIVAN OPERATIONS

Cunningham, T. R.	Executive Vice President - Sales and Marketing and General Manager - Minivan Operations
Winter, R. A.	General Product Manager - Minivan Operations
Dilts, G. E.	Director - Sales and Marketing Training
Osborn, T. J.	Director - Sales and Marketing Operations Planning
MacDonald, M. J.	General Manager - Fleet Operations
Baker, L. W.	General Manager - Mopar Parts
Liebler, A. C.	Vice President - Marketing and Communications
Pappert, E. T.	Vice President - Sales and Service
Landry, G. Y.	President - Chrysler Canada Ltd.

MINIVAN OPERATIONS

Winter, R. A.	General Product Manager - Minivan Operations
Malecki, D. C.	Chief - NS Body Program and Business Plans
Emmitt, T. J.	Manager - Vehicle Program
Nelson, Jr., K. R.	Minivan Business Operations Executive

SALES AND MARKETING TRAINING

Dilts, G. E.	Director - Sales and Marketing Training
Martinez, L. E.	Manager - Product Education
Bradfield, L. D.	Manager - Customer One
Donohue, W. P.	Manager - Program Implementation
Osann, F. R.	Manager - Planning and Administration

SALES AND MARKETING OPERATIONS PLANNING

Osborn, T. J.	Director - Sales and Marketing Operations Planning
Fisher, III, R. M.	Manager - Sales Planning, Product Prgms & Marketing Incentives
Brown, T. A.	Manager - Vehicle Programing
Greeley, J. W.	Manager - Advance Product Sales Planning
Hoenig, L. D.	Manager - Current Product Sales Planning
Berrigan, Jr., P. L.	Manager - Distribution and Scheduling
Wolenberg, D. M.	Dealer Inventory Management Executive
Hollinger, J. L.	Manager - Import Distribution
Stallard, S. I.	Manager - Distribution Services
Graham, S. M.	Manager - Car Allocation and Scheduling
Boughton, W. E.	Manager - Truck Allocation and Scheduling
Wise, J. D.	Manager - Distribution Planning
Nelem, J. J.	Manager - Special Programs Analysis
Williams III, W. R.	Manager - Sales Management Information
Depa, J. R.	Manager - Sales Reporting and Analysis
Lahoti, H. D.	Supervisor - Programming Systems
Coleman-Webb, B. K.	Manager - Consumer Strategy
Revoner, W. E.	Manager - Retail Process Development
Henning, R. J.	President and CEO - Van Pool Services, Inc.

SALES AND MARKETING AND MINIVAN OPERATIONS

FLEET OPERATIONS

MacDonald, M. J.	General Manager - Fleet Operations
Bergmoser, G. D.	Director - Government and Military Vehicle Sales
Tiahrt, W. C.	Manager - Special Vehicle Sales
Moss, J. A.	Manager - National Used Vehicle Sales
Clement, A. M.	Manager - Alternative Fuel Vehicles Sales and Marketing
Cole, M. W.	Staff Executive
Snyder, D. W.	Fleet General Marketing Manager
Pratt, F. J.	Manager - Programming and Systems Development
Ross, R. M.	Manager - Special Leasing Accounts
Bruno, H. J.	Manager - Scheduling, Bid and Special Equipment
Allen, P. W.	Manager - Fleet Opns Marketing and Company Car Programs
Elba, C. E.	Dealer DRAC Program Executive
Kastner, H. F.	Dealer Leasing Program Executive
Cindrich, S. M.	Supervisor - Car Programs Administration
Gray, E. M.	Supervisor - Company Car Management
Sczecienski, S.	Supervisor - Used Vehicle Marshalling Center
Delaney, J. T.	Manager - National Fleet Sales
Bolz, J. M.	National Accounts Administration Manager
Stephens, F. C.	National Accounts Executive - Rental
Lynch, J. E.	National Accounts Executive - Truck
Hallyburton, R. E.	Regional Fleet Sales Manager - West
Burke, J. M.	Regional Fleet Sales Manager - East
Gholston, J. R.	Regional Fleet Sales Manager - Central

MOPAR PARTS

Baker, L. W.	General Manager - Mopar Parts
Tomlanovich, A.	Manager - Materials
Williams, E. P.	Manager - Strategic Materials Project
Strange, R. W.	Manager - Inventory and Quality Control
Zygmontowicz, D. B.	Manager - Cataloging and Engineering Services
Zopfi, D. R.	Manager - Materials Operations Planning
Dimitry, G. R.	Manager - Field Distribution Operations
Mailloux, R. P.	Manager - Boston Parts Distribution Center
Radkewich, R. E.	Manager - Cleveland Parts Distribution Center
Moore, G. A.	Manager - Dallas Parts Distribution Center
Walker, J.	Manager - Denver Parts Distribution Center
Jenio, J. F.	Manager - Los Angeles Parts Distribution Center
Curry, R. J.	Manager - Newark Parts Distribution Center
Mathis, H. G.	Manager - Orlando Parts Distribution Center
Hamway, N. M.	Manager - Field Distribution Operations
Sanders, R. L.	Manager - Atlanta Parts Distribution Center
Michaud, G. J.	Manager - Chicago Parts Distribution Center
Marra, K. L.	Manager - Detroit Parts Distribution Center
Cardinale, R. J.	Manager - Memphis Parts Distribution Center
Haynes, R. A.	Manager - Minneapolis Parts Distribution Center
Masich, M. G.	Manager - New York Parts Distribution Center
Smith, S. L.	Manager - Portland Parts Distribution Center
Grundman, D. W.	Manager - St. Louis Parts Distribution Center

SALES AND MARKETING AND MINIVAN OPERATIONS

MOPAR PARTS (continued)

Graves, S. S.	Manager - National Distribution Centers and Intl Distribution
Broderdorf, R. S.	Manager - Center Line Parts Distribution Center
Campbell, G. R.	Manager - Marysville Parts Distribution Center
Baker, D. R.	Manager - Milwaukee Parts Distribution Center
Champagne, D. T.	Manager - Warren Parts Distribution Center
Wilson, J. E.	Manager - International Marketing and Supply
Konvisser, Z. L.	Manager - Distribution and Facilities Planning
Govern, T. M.	Q.I.P. Facilitation Executive
Rae, R. R.	Director - Mopar Parts Sales and Marketing
McDaniel, R. J.	Regional Parts Sales Manager - East
Bemko, K. L.	Area Sales Manager - Great Lakes
Basak, G. M.	Area Sales Manager - Southeast
Meals, J. T.	Area Sales Manager - Mid-Atlantic
Walker, D. F.	Area Sales Manager - Northeast
Killian, J. D.	Sales Operations Manager - Eastern Region
	Regional Parts Sales Manager - West
Hall, V.	Area Sales Manager - Midwest
Shaw, D. J.	Area Sales Manager - West Plains
Johnson, M. S.	Area Sales Manager - West Coast
Czech, J. E.	Area Sales Manager - Gulf States
Goodwin, J. E.	Sales Operations Manager - Western Region
Belleau, J. J.	Field Operations Executive
Kelly, Jr., P. D.	Parts Marketing Manager
Untiedt, J. H.	Manager - Inventory Concept Project
Mack, B. T.	Wholesale and Sales Support Manager
Mathis, J. C.	Service Marketing Manager
Ward, L. A.	Manager - Business Planning
Rollins, F. P.	Manager - Market Research and Sales Analysis
Bentzen, R. L.	Manager - Service Contracts Sales and Marketing
Boyd, J. R.	Manager - Service Contract Sales
Zima, G. A.	Service Contract Marketing Manager
Agrawal, G. L.	Manager - Service Contract Claims Operations
Zabkiewicz, C. J.	Manager - Service Contract Systems
Burgel, D. J.	Manager - Customer/Dealer Relations
Witkowski, D. W.	Manager - Service Contract Claims Processing

SALES AND MARKETING AND MINIVAN OPERATIONS

MARKETING AND COMMUNICATIONS *(Marketing)*

Liebler, A. C.	Vice President - Marketing and Communications
Szuba, R. D.	Budget Manager *(Page 2-2)*
Morrison, M. K.	Executive Director - Corporate Communications *(Page 2-2)*
Harris, S. J.	Executive Director - Public Relations *(Page 2-2)*
Bostwick, D. P.	Director - Corporate Market Research
Keegan, P. J.	Director - Corporate Merchandising and Special Events
Patane, L. P.	Executive Director - Brand Marketing

CORPORATE MARKET RESEARCH

Bostwick, D. P.	Director - Corporate Market Research
MacRae, D. F.	Market Measurement Research Manager
Taylor, R. C.	Product Development Research Manager

CORPORATE MERCHANDISING AND SPECIAL EVENTS

Keegan, P. J.	Director - Corporate Merchandising and Special Events
Fries, R. A.	Manager - Special Events
Jensen, R. E.	Manager - Prototype Programs
Hotchkiss, R. C.	Manager - Corporate Merchandising and Planning
Schmid, D. J.	Manager - Corporate Identity and Displays Planning

BRAND MARKETING

Patane, L. P.	Executive Director - Brand Marketing
Julow, J. R.	Director - Marketing Operations
Everett, R. W.	Manager - Mkg Technology and Interactive Communications
Jameson, J. F.	Manager - Advertising/Media Relations
Carrier, J. B.	Advertising and Media Relations Executive
Siringas, N. E.	Media Budget Specialist
MacKenzie, C. A.	Manager - Corporate Advertising
Tracy, W. H.	Manager - Motorsports Opns & Special Marketing Programs
Kelley, M. G.	Manager - Sales Promotions and Command Systems
Torok, S. A.	General Manager - Chrysler/Plymouth Division
Demers, D. L.	Staff Executive
Hein, R. L.	Manager - Chrysler National Marketing
Bruyn, S. D.	Manager - Plymouth National Marketing
Laurence, K. J.	Manager - Chrysler/Plymouth Advertising
Cherfoli, J. L.	Manager - Chrysler/Plymouth Merchandising
Levine, M. R.	General Manager - Dodge Car and Truck Division
Polce, C. T.	Staff Executive
Kuhnie, J. B.	Mgr - Dodge Advertising and Consumer Communications
Coughlin, E. M.	Manager - National Truck Field Marketing
Ranka, L. I.	Manager - Dodge Car Marketing
Hudson, C. D.	Manager - Dodge Truck Marketing
Brust, E. H.	General Manager - Jeep/Eagle Division
Kane, M. D.	Manager - Jeep Marketing
Rooney, D. R.	Manager - Eagle Marketing
Glenn, D. L	Manager - Merchandising
Wayman, G. A.	Manager - Jeep/Eagle Dealer Advertising

SALES AND MARKETING AND MINIVAN OPERATIONS

SALES AND SERVICE

Pappert, E. T.	Vice President - Sales and Service
Shady, J. J.	General Manager - Dealer Operations
Glaub, W. C.	General Sales Manager - Field Sales Operations
Marinelli, T. R.	General Sales Manager - Field Sales Operations
Casola, J. H.	General Service Manager - Field Service Operations
Jacobs, M. C.	General Service Manager - Field Service Operations
Krumboltz, D. R.	Staff Executive
Mahon, E. F.	Field Operations Executive
McRae, T. L.	Dealership Development Manager
Muldoon, R. M.	Program Development Manager
Yatsko, M. E.	National Process and Training Manager
Clark, R. S.	Manager - Customer Relations
Bryant, III, M. G.	Manager - Field Operations Planning and Support
Gomolski, G. E.	Manager - Sales Business Planning and Strategy
Williams, R. M.	Director - National Dealer Relations
Rhoads, S. L.	Customer Handling Manager

DEALER OPERATIONS

Shady, J. J.	General Manager - Dealer Operations
Filbin, E. J.	Manager - Business Management
Ward, C. M.	Minority Retail Development Programs Manager
Yocca, S. J.	Manager - Minority Retail Dealer Operations
Murphey, L. M.	Manager - Dealership Properties and Facilities
Kolkjen, M. J.	Manager - Eastern Area Dealership Real Estate
Green, D. F.	Manager - Central Area Dealership Real Estate
Noles, T. H.	Manager - Western Area Dealership Real Estate
	Manager - Realty Operations
Hurst, W. S.	Manager - Franchise Planning and Administration
Foster, T. G.	Manager - Dealer Agreement and Franchising
Gentelia, P. J.	Manager - Dealer Identity
Graham, C. J.	Manager - Dealer Placement - East
Votta, G. S.	Manager - Dealer Placement - West
Neych, T. J.	Manager - Market Representation
Coventry, D. A.	Manager - Marketing Investment Development
Jobst, P. V.	Manager - Operations
Rice, M. C.	Dealer and Marketing Investment Financial Dvlmt Executive
Yungbluth, L. A.	Branch Manager - Atlanta
Janis, R. F.	Branch Manager - Chicago
Bergsma, S. J.	Branch Manager - Detroit
Mock, Jr., G. E.	Branch Manager - Los Angeles
Woodward, M. L.	Branch Manager - Philadelphia
Rizzo, R. G.	Staff Executive

CUSTOMER RELATIONS

Clark, R. S.	Manager - Customer Relations
Edghill, P. A.	Customer Relations Group Supervisor
Janke, E. J.	Arbitration / Regulation Administration
Knight, E. W.	Training Development Manager
Velliky, W. J.	Customer Relations Business Planning Manager

SALES AND MARKETING AND MINIVAN OPERATIONS

SALES AND SERVICE (continued)

FIELD SALES AND FIELD SERVICE OPERATIONS

Glaub, W. C.	General Sales Manager - Field Sales Operations
Marinelli, T. R.	General Sales Manager - Field Sales Operations
Casola, J. H.	General Service Manager - Field Service Operations
Jacobs, M. C.	General Service Manager - Field Service Operations
Ciesla, R. D.	Zone Manager - Sales and Service - Atlanta
Dougherty, P. W.	Assistant Zone Manager
Cicora, T. F.	Assistant Zone Manager
Young, J. F.	Zone Manager - Sales and Service - Boston
Maddock, J. A.	Assistant Zone Manager
Rupp, R. P.	Assistant Zone Manager
Saddler, L. G.	Zone Manager - Sales and Service - Charlotte
Strickland, Jr., A. C.	Assistant Zone Manager
Broadbear, E. G.	Assistant Zone Manager
Licina, P. A.	Zone Manager - Sales and Service - Chicago
Campbell, D. M.	Assistant Zone Manager
Maxwell, D. E.	Assistant Zone Manager
Hurst, H. L.	Zone Manager - Sales and Service - Cincinnati
Johnson, M. M.	Assistant Zone Manager
Drozd, G.	Assistant Zone Manager
Park, J. W.	Zone Manager - Sales and Service - Dallas
Morton, H. M.	Assistant Zone Manager
Crawford, C. A.	Assistant Zone Manager
Hannan, Jr., J. S.	Zone Manager - Sales and Service - Denver
Greene, S. M.	Assistant Zone Manager
Woltjen, J. J.	Assistant Zone Manager
McAlear, T. C.	Zone Manager - Sales and Service - Detroit
Bartush, M. A.	Assistant Zone Manager
Foshe, D. A.	Assistant Zone Manager
Libby, T. T.	Zone Manager - Sales and Service - Houston
Lombardo, Jr., W. A.	Assistant Zone Manager
Therrien, E. P.	Assistant Zone Manager
Albert, F. W.	Zone Manager - Sales and Service - Kansas City
Shean, W. P.	Assistant Zone Manager
Gillespie, S. M.	Assistant Zone Manager
Verna, N. L.	Zone Manager - Sales and Service - Los Angeles
Lugger, H. S.	Assistant Zone Manager
Disney, G. K.	Assistant Zone Manager
Falke, J. T.	Zone Manager - Sales and Service - Memphis
Gee, J. D.	Assistant Zone Manager
Grady, P. M.	Assistant Zone Manager

SALES AND MARKETING AND MINIVAN OPERATIONS

SALES AND SERVICE (continued)

FIELD SALES AND FIELD SERVICE OPERATIONS

Engelsdorfer, M. F.	Zone Manager - Sales and Service - Milwaukee
White, S. D.	Assistant Zone Manager
Jeffries, C. J.	Assistant Zone Manager
Walker, B. A.	Zone Manager - Sales and Service - Minneapolis
Dibble, R. M.	Assistant Zone Manager
Albro, E. J.	Assistant Zone Manager
Peart, D. J.	Zone Manager, Sales and Service - New Orleans
Coleman, J. W.	Assistant Zone Manager
Hammond, E. B.	Assistant Zone Manager
Yaconis, F. C.	Zone Manager - Sales and Service - New York
Loveless, T. J.	Assistant Zone Manager
Newbrough, J. E.	Assistant Zone Manager
Smith, R. T.	Zone Manager - Sales and Service - Orlando
Kelleher, J. A.	Assistant Zone Manager
Young, C. L.	Assistant Zone Manager
Shugg, S. J.	Zone Manager - Sales and Service - Philadelphia
Doucette, W. J.	Assistant Zone Manager
Bartlett, L. W.	Assistant Zone Manager
Moore, W. E.	Zone Manager - Sales and Service - Phoenix
Mees, M. J.	Assistant Zone Manager
Horne, R. L.	Assistant Zone Manager
Agnew, P. C.	Zone Manager - Sales and Service - Pittsburgh
Serkes, M. J.	Assistant Zone Manager
Seat, D. L.	Assistant Zone Manager
Fleck, C. C.	Zone Manager - Sales and Service - Portland
Hughes, S. P.	Assistant Zone Manager
Denardo, W. D.	Assistant Zone Manager
Binder, T. J.	Zone Manager - Sales and Service - St. Louis
Schmitt, R. C.	Assistant Zone Manager
Eckert, C. E.	Assistant Zone Manager
Siegal, M. R.	Zone Manager - Sales and Service - San Francisco
Sherwood, F. J.	Assistant Zone Manager
Gaines, P. E.	Assistant Zone Manager
Wild, D. R.	Zone Manager - Sales and Service - Syracuse
Glymph, C. M.	Assistant Zone Manager
Wheeler, J. K.	Assistant Zone Manager
Gray, V. W.	Zone Manager - Sales and Service - Washington
Davis, D. S.	Assistant Zone Manager
Coffey, N. F.	Assistant Zone Manager

SALES AND MARKETING AND MINIVAN OPERATIONS

CHRYSLER CANADA LTD.

Landry, G. Y.	President - Chrysler Canada Ltd.
Gaudette, G. T.	Vice President - Finance
	Manager - Internal Controls and Field Audit
Gilman, J. M.	Controller - Financial Control
Petrozzi, A.	Manager - Financial Analysis
Towers, K. B.	Manager - Financial Control
Fenn, G. W.	Controller - Accounting and Tax Affairs
Cott, E. A.	Manager - Accounting
Davies, P. J.	Supervisor - Manufacturing Group Accounting
Cafe, J. F.	Supervisor - Manufacturing Group Accounting
Houde, D. J.	Supervisor - Accounts Payable
McInnis, K. A.	Supervisor - Tax
Schmid, M. A.	Treasurer
Macaddino, L.	Treasury Executive
Wolfram, A.	Manager - Banking
Rawlins, B. C.	Manager - Credit
Wright, R. A.	Supervisor - Salary Payroll
Dillon, D. E.	Supervisor - Hourly Payroll
Grant, T. J.	Vice President, General Counsel and Secretary
Rose, S. E. R.	Assistant General Counsel and Assistant Secretary
Arditti, E. R.	Assistant General Counsel
Francese, K. R.	Vice President - Human Resources
Dunn, J. I.	Manager - Benefits, Hourly Compensation and Employment
Thrasher, R. C.	Manager - Workers' Comp, Group Ins & Medical Plans
Russette, G. P.	Manager - Unemployment Benefits & Financial Planning
Carswell, P. K.	Supervisor - Pension Plans
McPherson, R. A.	Supervisor - Hourly Employment
Cross, T. E.	Manager - Industrial Security
Bezaire, P. J.	Manager - Labour Relations and Safety
MacKenzie, P. D.	Manager - Salary Administration and Employment
Latta, R. M.	Vice President and General Sales Manager
Manor, B. E.	Director - Market Investment and Dealer Relations
Lawrie, G. N.	Manager - Dealership Properties and Facilities
Bowey, R. J.	Manager - Dealer Relations
MacLean, D. W.	Manager - Market Investment Development
Hallet, G.	Supervisor - Business Management
Manor, M. W.	Manager - National Fleet and Lease
LeBlanc, R. M.	Manager - Sales Operations
MacDonald, J. H.	Supervisor - Distribution
Cecile, J. P.	Manager - Sales Planning
Simmons, G. N.	Manager - Sales Programming and Systems
Kaban, W. A.	Field Operations Manager
Kenney, J. G.	National Sales Development Manager
Spadotto, L.	Regional Manager - Atlantic Region
Lyle, N. S.	Assistant Zone Manager
Paterson, W. B.	Regional Manager - Ontario Region
Tuckey, K. W.	Assistant Zone Manager
Jenkins, G. F.	Regional Manager - Quebec Region
Clement, B. B.	Assistant Zone Manager
Landry, S. J.	Regional Manager - Western Region
Goslin, R. A.	Assistant Zone Manager

SALES AND MARKETING AND MINIVAN OPERATIONS

CHRYSLER CANADA LTD. (continued)

Stein, O. M.	Vice President - Public Affairs
Walker, M. J.	Director - Governmental Affairs
Crook, C. R.	Vice President - Marketing
Barone, P.	National Advertising Manager
Connor, W. D.	National Dealer Association Advertising Manager
Levasseur, J. C.	Manager - Marketing Operations and Planning
Marshall, D. A.	Manager - Marketing
Harling, D.	Manager - Product Planning
Lamothe, D.	National Training Manager
Baldwin, G. L.	Manager - Sales Promotion
Renaud, R. A.	Vice President - Parts and Service and Technical Programs
Perkins, S. R.	Director - Engineering
Mann, J. L.	Manager - Product Engineering
Meloche, G. A.	Manager - Plant/Facilities Engineering
Daws, F. J.	Manager - Product Engineering
MacKinnon, K. W.	Manager - National Parts Distribution Center
Williams, P. R.	Manager - National Parts Sales and Marketing
Pambrun, D. P.	Manager - Field Operations
Morgan, D. W.	Manager - Marketing
Westbrook, L. E.	Manager - National Service
Betteridge, R. D.	Manager - Customer Satisfaction
Blonde, P. M.	Customer Relations Supervisor
Markham, L. A.	Customer Relations Supervisor
Giswein, N.	Technical Training Design Supervisor
Mooney, T. J.	Manager - Parts Supply
McKee, J. D.	Manager - Parts Inventory Control
Knight, J. F.	Manager - Materials
Chatwood, A. R.	Inventory Operations General Supervisor
MacKinnon, K. W.	PDC Manager - Ontario
Czilok, R.	PDC Manager - Vancouver
Wilson, E. W.	PDC Manager - Red Deer
Luciani, M.	PDC Manager - Montreal
Whiklo, K. L.	PDC Manager - Winnipeg
Stewart, K. R.	PDC Manager - Moncton
Rutherford, R. E.	Manager - Strategic and Operations Planning

ATTACHMENT AI

EXPERT WITNESS REPORT - 2 January 2012 REVISION

Kline v. Loman Auto Group, Victoria Morgan-Alcala, et al.

Page Range 94

Pages 920 – 1013

1986 PHASE I SUMMARY REPORT

TRUCK DEALER VISIT PROGRAM

AMERICA'S BEST BACKED TRUCKS

5/50 RAM TOUGH

Dodge Truck

DIVISION OF CHRYSLER MOTORS

TRUCK DEALER VISITS - PHASE I SUMMARY REPORT

TABLE OF CONTENTS

o INTRODUCTION	TAB 1
o EXECUTIVE SUMMARY	TAB 2
o DETAILED SUMMARY REPORT	TAB 3
o TRUCK DEALER VISIT ANNOUNCEMENT LETTER	TAB 4
o GENERAL NOTES	TAB 5
o "THOUGHT STARTERS" QUESTIONNAIRE	TAB 6
o ZONE VISIT SCHEDULE	TAB 7
o TYPICAL ZONE VISIT CONFIRMATION LETTER	TAB 8
o INDIVIDUAL ZONE VISIT REPORTS	
- SAN FRANCISCO	TAB 9
- CHICAGO	TAB 10
- ORLANDO	TAB 11
- LOS ANGELES	TAB 12
- CINCINNATI	TAB 13
- NEW YORK	TAB 14
- HOUSTON	TAB 15
- DALLAS	TAB 16
- BOSTON	TAB 17
- SYRACUSE	TAB 18
o PHASE II DESCRIPTION/SCHEDULE	TAB 19
o COMMENTS/ACKNOWLEDGEMENTS	TAB 20

ADVANCE PLANNING
REV. 05/15/86 T6/PVS.15

TAB 1

INTRODUCTION

TRUCK DEALER VISITS - PHASE I SUMMARY REPORT

INTRODUCTION

- Phase I of the truck dealer visit program was originally scheduled/formulated to provide market inputs to the advance product development process for full-size trucks via the May 5, 1986 Concept Approval Meeting (postponed).

- During the nine week period of February 23, 1986 through April 22, 1986, thirty-five truck dealers within ten Chrysler sales zones were visited. The ten zones, listed in order of visitation, included:

  - San Francisco
  - Chicago
  - Orlando
  - Los Angeles
  - Cincinnati
  - New York
  - Houston
  - Dallas
  - Boston
  - Syracuse

- Visitation was restricted to those dealers that have competitive domestic truck franchises as well as the Dodge franchise. The visits were attended by dealer principals/management, sales zone management and Chrysler Center personnel. The discussions were organized into the following categories:

  - Power Train
  - Pickup
  - Van/Wagon
  - General

- Chrysler Center participation included twenty middle management personnel, representing eight separate organizations. The represented organizations included:

  - Advance Planning
  - Advance Power Train Planning
  - Components Planning
  - Financial Planning
  - Manufacturing Feasibility
  - Program Management
  - Truck Operations
  - Vehicle Packaging

- The attached report attempts to fulfill multiple purposes:

  - First, an attempt is made via the "Executive Summary" (Tab 2) to review the general highlights of the program in a concise format. For those seeking additional discussion, a "Detailed Summary Report" is provided (Tab 3).

  - The second purpose is to provide the reader with a history/background of the truck dealer visit program while providing regional inputs for analysis of specific truck product strength/weaknesses. This portion of the report (Tabs 4 through 18) also provides a base for future dealer visit program formatting as well as possible format improvements/modifications as appropriate.

  - The third purpose is to announce/describe Phase II of the truck dealer visit program and provide a tentative Phase II dealer visit schedule (Tab 19).

- Finally, the attached report closes with general comments and acknowledgements to provide the more subjective aspects of the program as well as thank the participants for their support (Tab 20).

ADVANCE PLANNING
05/15/86 T6/PVS.20

TAB 2

EXECUTIVE SUMMARY

TRUCK DEALER VISITS - PHASE I SUMMARY REPORT

EXECUTIVE SUMMARY

The Full-Size Truck Market

- Full size, light duty pickups and van/wagons represent a market that is virtually unique to the Continental U.S., Canada and to a lesser extent Mexico. Participation in the full-size truck market is considered "straight forward", where product sophistication is secondary and product "fundamentals" are emphasized. To a large degree, the lucrative full-size truck market remains proprietary to the "Big Three", but some dealers questioned the permanency of that status given past Japanese and European incursions elsewhere in the car/truck markets.

- In full-size trucks Ford is the "hands down" leader and has been for 10-15 years. The dealers visited go so far as to say that the Ford, specifically the pickup, is the status symbol of the full-size truck market.

- The truck buyer is extremely brand loyal to the point of differentiating him/her psychologically from the typical car buyer. Once brand loyalty is established, "conquest" of that buyer by a competitive make is that much more difficult. Brand loyalty is strongest with Ford buyers with frequent conquest sales from Dodge and Chevy/GMC...rarely the reverse. In this respect market share is a long term issue with a proven track record of product reliability/durability being imperative to success.

Power Train

- In trucks, the overall performance, reliability and durability of the power train and chassis commands overwhelming precedence with respect to other aspects of the product. In the dealer discussions of "sheet metal versus power train", the "trucker" will almost invariably choose the superior power train.

- In this regard Ford is out in front with Chevy/GMC a distant second and Dodge considered last. Specifically, not only does Ford provide a "complete" power train lineup (six cylinder; small, medium and large gas V8, and a "good" diesel) but clearly leads in the implementation of technologies such as multi-point electronic fuel injection, automatic overdrive transmissions with lock-up, etc. Although Chevy/GMC also offers a "complete" power train lineup, the recent quality and overall driveability of their products is not on par with Ford. Dodge on the other hand has an "undersized" six cylinder, a medium size V8 (360) that has serious driveability, performance and economy shortfalls, and does not offer a large gas V8 or a "good" diesel. Although the dealers laud the reputation of the 318, they emphasize that the lack of a large gas and/or a diesel is a serious drawback for Dodge trucks.

- One dealer summarized the situation as follows, "Ford power trains sell Ford trucks". If Dodge is to remain a contender in the full-size truck market, the power train/power train availability must improve to at least that provided by Ford.

TRUCK DEALER VISITS - PHASE I SUMMARY REPORT

EXECUTIVE SUMMARY

Pickups

- In the pickup portion of the full-size truck market, Ford is considered the product target. It is felt that if Ford had the "merchandising muscle of GM", they would command another 10-15 percent market share.

- There was near unanimous, sometimes unsolicited, agreement that Dodge quality has improved "dramatically" in the last 4-5 years. In addition to quality, Dodge pricing also commands the attention of the buyer. However, it is felt that a $500-$1000 price break would be required to draw a Ford buyer to Dodge (conquest sale). Ford's superior quality reputation, vastly superior trade-in value and well known superiority in power train were emphasized. By comparison, the Chevy enjoys superior merchandising (especially Corporate advertising) and an "exciting" external appearance (vs. Dodge).

- Nearly all thirty-five dealers voiced their reservations over the "lateness" of the 1991/1992 Dodge truck renewal explaining that "the old appearance is becoming difficult to sell around". With the Chevy freshening scheduled for 1987, a Ford freshening in 1987 and a "major action" scheduled for the Ford truck in 1989, the dealers were hoping that "at least a freshening" was planned prior to 1991. In this regard, their was near unanimous agreement that aerodynamic "refinement" or minor aerodynamic cues were acceptable as long as a "tough" or "rugged" appearance was simultaneously retained. Other design comments included a request to prioritize behind the seat storage over the crew/club cab.

Van/Wagon

- In balance, the Dodge van/wagon product is considered superior to that offered by Ford or Chevy. The exterior of the Dodge is considered more appealing, the quality equivalent if not superior, and the ride, ride stability and maneuverability marginally superior to that of the competitive entries. The biggest negatives voiced by dealers concerning the present Dodge van/wagon was that pricing was simply too high. A significant number of dealers were also concerned about the lack of corporate advertising support, especially television ads, and the recent slowing of full-size van/wagon sales in general.

- Near unanimity exists to the effect that the unibody versus full-frame construction is not a major issue in the van/wagon product. It was noted that commercial van buyers tend to be more aware of vehicle construction (versus typical wagon buyers) with one of their major concerns being "walk through" capability. On the other hand, wagon buyers frequently mention passenger compartment engine intrusion. Many of the dealers feel that although serviceability is roughly equivalent between Dodge and Ford, Ford's extended front end tends to reduce engine intrusion, improving not only "walk through" but passenger footroom as well. In addition, the Dodge design tends to exacerbate existing power train NVH, most notably cooling fan noise. The dealers feel this NVH problem could be mitigated with the availability of an automatic overdrive transmission, especially for passenger wagons.

- With respect to the van/wagon renewal, nearly all of the dealers surveyed would welcome an all new product but do not feel that a major deviation from the present design is required. Other than power train improvements; aerodynamic "refinements" and various feature enhancements will sufficiently maintain the competitive position presently enjoyed by Dodge.

TRUCK DEALER VISITS - PHASE I SUMMARY REPORT

EXECUTIVE SUMMARY

General

- A clear majority of the dealers are anxiously awaiting a Dodge entry in the "hot" sport utility segment. Presently dominated by the Chevy S-10 Blazer, the sport utility segment has undergone a radical shift in emphasis from the full-size Ramcharger, Blazer and Bronco type vehicle to the S-10 Blazer/ Bronco II sized vehicles. Expecting that a Dodge entry would/should be based on the N-Body, most dealers feel that the sport utility is the priority versus the N-extended cab. With the S-10 Blazer as the target vehicle, not only should an N-Body sport utility be made superior in product content versus the S-10, but it is important that the design be appealing to women and professionals as their primary vehicle, as does the present Blazer. The vehicle must be available in both 2 and 4 wheel drive configurations and have 4 (or 3) doors. With respect to the latter, the overall design should provide superior rear seat entry.

- An interesting outcome of the dealer visits were comments made relative to truck advertising and Lee A. Iacocca. Many dealers feel that Corporate advertising support for trucks is insufficient and simultaneously feel that the reputation, appeal and resultant impact of LAI could be extremely effective in rectifying this situation. In fact, one dealer principal uses the sales pitch, "Lee Iacocca used to build Ford trucks, now he's building Dodge...you don't think he's going to let ol' Henry beat him do you?!" Although humorous at the surface, the strict marketing implications/content of this sales pitch may deserve additional thought.

- In terms of the new "minivan" entries from Ford and Chevy/GMC, the Dodge dealers feel that the short wheelbase B-150 van/wagon should be aggressively used to "fend them off". Corporate advertising support (especially television ads) should portray the rear-wheel-drive Aerostar and Astro as vehicles competing with the rear-wheel-drive B-150. The RWD similarity and the comparably superior attributes of the B-150 should be continuously marketed against the Aerostar/Astro furthering a "properietary" image of minivans as Chryslers. Comparisons of the Voyager/Caravan to the Aerostar/Astro should be avoided to assist with the effort to separate the competition's identity from the minivan market. One dealer envisioned it this way, "The Aerostar and Astro are just small rear-wheel-drive vans, they compete with my B-150...if you want a minivan, you need front-wheel-drive, and the only company that makes them is Chrysler!" In summary, if you want a minivan, you want a Voyager or a Caravan; if you want a small van, you want a "tried and true" short wheelbase B-150.

TAB 3

DETAILED SUMMARY REPORT

TRUCK DEALER VISITS - PHASE I SUMMARY REPORT

DETAILED SUMMARY REPORT

Purpose

The purpose of the Detailed Summary Report is to compile those comments quoted directly from the individual zone reports that are indicative of the majority opinion within the power train, pickup, van/wagon and general categories for full-size trucks. Although attempts have been made to avoid repetition of the fundamental points raised, there are instances where different aspects of the issue require multiple perspectives for adequate qualification, etc.

Those readers seeking regional insight or additional inputs are encouraged to examine the individual zone reports (Tabs 9-18).

Power Train

- o The number one priority to increase Dodge truck sales is to offer competitive power trains.

- o Full engine line availability (six cylinder; small, medium, large V8 gas; and diesel) a real strength for Ford/Chevy.

  - Dodge does not fully participate in truck market due to limited engine line coverage.

- o Need to "leap frog" in power train area, "we are behind".

- o Engines are selling Ford trucks. The 302 MPI/A40D is especially a winner.

- o The Ford 302 MPI engine outsells the 351 by a 5 to 1 margin in work trucks and has eliminated 351 sales in personal use trucks. Prior to the 302 getting MPI, the 351 was approximately 40% of 302/351 sales.

- o Most buyers expecting to tow (heavy) will buy Ford's 460 or the 6.9L diesel. Dodge does not participate in heavy towing due to lack of large gas/diesel.

- o Dodge 6-cylinder is too small, needs to be bigger, around 300 CID.

- o Fuel injection badly needed on trucks; a definite weakness versus Ford. Customers "love" Ford's 302 MPI engine.

- o Need EFI, but TBI vs. MPI is no issue.

- o 50% of truck showroom traffic is aware of Ford's new MPI 302 engine.

- o 318 fuel economy appears to be deteriorating versus previous model years; has adequate power, good reputation.

- o We need a 360 engine that "runs", especially on ¾ and 1-ton trucks. The 360 currently does not meet performance or fuel economy expectations.

- o Would like to see a large gas but an all-out 360 with MPI, etc. may be better long run strategy.

ADVANCE PLANNING
05/14/86 T6/PVS.23

TRUCK DEALER VISITS - PHASE I SUMMARY REPORT

DETAILED SUMMARY REPORT

Power Train (Continued)

- Seventy-five percent of commercial Chevy 30 vehicles are ordered with large gas (454 Cu. In.); one-ton vehicle market dominated by Ford/Chevy.

- 454 large gas a real plus; practically all "dualies" go with 454.

- Commercial business participation would be greatly aided by large gas engine to compete with Ford 460 and Chevy 454.

- Poor past market performance of Chevy diesel still affects saleability of diesels in general.

- Large gas engine not the priority versus diesel; would be able to sell a good diesel. Ford/IH 6.9L a good seller.

- Would prefer large gas entry over diesel at present; GM hurt overall image of diesel engines. However, if diesel had performance/fuel economy and name with a reputation, this could be very sellable.

- Truck fuel economy is important. Need 5-speed manual and 4-speed automatic transmission.

- (Dodge) manuals in general are good pieces; clutch quality also "good".

- Presently buyers are not requesting 5-speed manual transmission. However the import market has made them aware of the capabilities of the 5-speed transmission. General consensus seems to be that 5-speed transmission may be an option for future light-duty trucks.

- Bad initial AOD offerings (from GM) has ruined reputation; AOD not wanted unless vast improvements are made.

- Approximately 50% of Ford's truck showroom traffic is aware of automatic overdrive transmission; Dodge does not need AOD immediately but would like a "good one" in near future.

- Dodge needs more optional axle ratios and in general, more versatility in power train offerings.

- On 4 X 4, don't change front suspension; stay with solid axle. It's a selling feature.

- Although Ford's initial IFS problems have been fixed, recommendation is to stay with solid front axle - Ramtrack has been greatly improved recently.

Pickups

- Full-size pickup buyers have a definite purpose in mind which requires that size vehicle.

- For the most part pickup buyers are very loyal; Ford sells on name and past histroy; a long term reputation is key.

TRUCK DEALER VISITS - PHASE I SUMMARY REPORT

DETAILED SUMMARY REPORT

Pickups (Continued)

- Ford makes and is known for the best pickup. A status symbol; superior quality reputation, trade in value, etc. Ford would "kill" pickup truck market if they had GM's merchandising.

- A 15% share is attainable with competitive product availability. Further share improvement would be a function of building a broader owner base plus improved advertising and merchandising.

- The Dodge sales mix is 15% business, 85% personal use. It is forced because of the lack of product to meet the needs of business users.

- Dodge catching up with customer loyalty - need to wait another year to confirm.

- Dodge pickup quality has drastically improved versus previous model years.

- Chevy/GMC pickup quality poorest of "Big Three", especially drive train.

- Pricing is crucial in pickup sales; Chevy doing better than Ford, Dodge pricing biggest selling point.

- Resale is also very important; Dodge not competitive here.

- Dodge pickup styling very old; "Dodge styling helps sells Fords!" Dodge badly needs "dress-up" to make it to the 1990's.

- Trucks should be "Macho" in appearance.

- Some aerodynamic exterior theme refinements are okay for pickup in short run. Major aero-based design change not recommended; perhaps long-run only.

- Extended cab (+6") would be excellent. Club cab option would be good.

- Extended cab desired by families; extra space sometimes used for children.

- Target interior is Ford. A 60/40 seat would be a great feature.

- Current seating package - retain, don't raise 'H' point. Ingress and Egress problems, buyer resistance.

- Need new I/P but no excess electronics. No electronic graphics.

- Chassis okay; no need for change, good ride and handling; perceived as better than competition.

- Undersized tires do not support "Ram Tough" image on Dodge pickups.

- Fifth wheel pickup trailer tow is important, need dual rear wheel pickup.

- We will need to have a dual rear wheel conventional pickup when the Cummin's diesel becomes available along with good axle ratios.

ADVANCE PLANNING
05/14/86 T6/PVS.25

TRUCK DEALER VISITS - PHASE I SUMMARY REPORT

DETAILED SUMMARY REPORT

Vans/Wagons

- o Less market emphasis on full-size van/wagon (versus T115/Astro/Aerostar) but should be retained for commercial sales. Minivans taking higher share of market.

- o Full-size van sales have drastically fallen off; reason unclear but Astro van may be part of reason. Conversion van sales also down.

- o Current pricing is too high.

- o Dodge is considered the best V/W on the market.

- o Dodge van/wagon considered superior in styling, interior and serviceability versus Ford/Chevy entries. Fully dressed Dodge wagon very attractive.

- o General consideration - Dodge is the leader. Good product with more sizes and derivatives. No specific problem. Reskin could suffice. Sell more than 90% 127" wheel base.

- o Exterior design of Dodge wagon is excellent; no major changes are needed, but a freshening is needed prior to 1991/1992 time frame.

- o "Aero" will be important in the 1990's.

- o Quad lamps look better than the new 1986 front end.

- o Dodge does not have enough color combination available compared to Ford.

- o Eliminating engine dog house would improve passenger foot space and reduce heat.

- o Engine placement better than Ford. Dodge has better serviceability, also shorter and easier parking.

- o Engine cover intrusion is no problem.

- o The current walk through height is required.

- o A new instrument panel is needed.

- o We need plusher interiors.

- o Optimize storage capabilities.

- o Sliding door is a problem; swing doors are preferred.

- o Sliding door, poor maintenance and function.

- o Durability/reliability a major concern for van/wagon buyers; Dodge is doing a good job.

- o Wagon would benefit from fuel economy gains via 4 speed overdrive automatic option. Currently nearly all Chevy wagons are ordered with 4 speed O.D. at $400 over base automatic transmission. Consumer acceptability/awareness very high.

ADVANCE PLANNING
05/14/86 T6/PVS.26

TRUCK DEALER VISITS - PHASE I SUMMARY REPORT

DETAILED SUMMARY REPORT

Van/Wagons (Continued)

- o Full-frame vs. unitized construction not considered a factor.
- o Commercial van buyers tend to be more aware of vehicle construction; i.e. frame versus unitized. In general, wagon buyers indifferent/not aware.
- o The front chassis needs to be strengthened on Dodge, particularly for commercial usage.
- o Ride and stability is good.

General

- o Priority: Power train first, sheetmetal second.
- o No matter what you build in Detroit, if you build it right and it works, we can sell it.
- o "Value" is key to selling any vehicle - trucks or cars - a combination of price, quality and product content.
- o Dodge quality has improved significantly in the last five years.
- o Dodge trucks sell on price. In order to be competitive, we must upgrade GVW's, interiors, and power trains. GVW's fail to haul stated loads and power trains fail to move loaded units.
- o Market share a long term issue, continuous product reliability image imperative; Ford has been most successful.
- o Truck buyers typically buy when need arises - they usually don't order and wait - they buy from stock.
- o Truck buyers tend to be more informed about the product. 95% of vehicles are sold from inventory at dealership. Orders are based upon historical track record.
- o Commercial buyers not sensitive to styling, functionality emphasized.
- o Many fleet buyers are switching back to Ranger from import "minis" for durability reasons.
- o Fleet sales should include 5/50 warranty protection regardless of fleet size. Presently, once fleet size reaches 10+ vehicles this disqualifies owner for 5/50 protection - totally inconsistent with 5/50 marketing theme.
- o Ford's "Goodwill" service program very effective - should be considered by Chrysler.

TRUCK DEALER VISITS - PHASE I SUMMARY REPORT

DETAILED SUMMARY REPORT

General (Continued)

- o LAI could be used very effectively in truck commercials - more Corporate advertising support of trucks needed in general.
- o "Lee Iacocca used to build Ford trucks now he's building Dodge". This sales pitch appears effective.
- o Short wheelbase RWD wagon (B150 with 109" W.B.) has potential to compete against RWD Astro/Aerostar. National advertising support needed.
- o Sport utility is best growth opportunity.
- o The Dakota (sport utility) is about the right size but the price has to be right.
- o Dakota sport utility is needed in 4 wheel drive configuration as number one priority, even over 'N' extended cab.
- o Dakota sport utility is important. It needs more than two doors. Three doors would be okay (rear side-curb side door). Ford's biggest product complaint is lack of rear seat entry in Bronco II.
- o Rambo type vehicle with convertibility not acceptable.
- o The new sport utility should stick to the current market concept, i.e. no RAMBO or T115 4WD. Dakota derivative with four doors would be about right.
- o V6 Dakota will be big seller; small V8 would be a "killer".
- o Composite pickup truck box could be a real plus for corrosion/payload benefits.
- o Chrysler starter noise does not convey a quality image.
- o Option simplification/packaging is acceptable if it helps quality.
- o Customers are still very fuel economy conscious - current gas pricing considered very temporary.
- o Customers expect new things from the New Chrysler Corporation.

TAB 4

TRUCK DEALER VISIT ANNOUNCMENT LETTER

Inter Company Correspondence

F A X P A K

Telephone: I6

Date: January 17, 1986

To — Name & Department | CIMS Number

All Zone Managers

From — Name & Department | CIMS Number

P. H. Kenningham	Truck Sales Manager	USAS	Chrysler Center	414-05-26

Subject: [redacted]

In the near future, there will be two teams from Detroit contacting some of our Truck dealers who also have a domestic competitive truck franchise (non-duals). The teams will be comprised of representatives from Advance Product Planning, Marketing, Program Management, Manufacturing, and Truck Operations. In all probability, the Truck Specialist will accompany the teams on the dealer contacts.

Please provide me with a list of your dealers (include city and state), that meet the above requirements, and that you would recommend as a beneficial contact. I would appreciate receiving your list by [redacted].

If you have any questions, please call.

P. H. Kenningham

PHK/1-17/2

cc: D. L. Davis
P. J. Keegan
E. S. Clark
T. C. McAlear
All Regional Managers
All Regional Truck Managers

TAB 5

GENERAL NOTES

TRUCK DEALER VISITS
GENERAL NOTES

- THE TRUCK DEALER VISIT PROGRAM IS BEING CONDUCTED SIMILAR TO THE C/P DEALER VISITS BUT INDEPENDENTLY.

- THE OVERALL THEME OF THE VISITS IS TO DETERMINE/DISCUSS THE ISSUES RELEVANT TO THE FULL-SIZE PICKUP AND VAN/WAGON PRODUCT.

- THE TENTATIVE SCHEDULING INVOLVES AT LEAST ONE ZONE VISIT PER WEEK.

- PHASE I WILL INCLUDE TEN SALES ZONES AND BE COMPLETED BY APRIL 25, 1986. (PRE-MAY 5TH CONCEPT APPROVAL).

- PHASE II WILL VISIT THE REMAINING ZONES AND IS PLANNED FOR COMPLETION BY YEAR-END.

- TRIP PARTICIPANTS WILL INCLUDE REPRESENTATIVES FROM ADVANCE PLANNING, MARKETING, PROGRAM MANAGEMENT AND MANUFACTURING WHEN POSSIBLE. (THE BUSINESS GROUPS, LIBERTY AND OTHER RELEVANT ORGANIZATIONS WILL BE INCLUDED AS PART OF PHASE II).

- EACH TRIP WILL INCLUDE A REPRESENTATIVE OF ADVANCE PLANNING WHEN FEASIBLE.

- FROM THREE TO FOUR DEALER VISITS IS USUALLY REQUIRED TO ACCURATELY SURVEY A PARTICULAR GEOGRAPHIC AREA. THE DEALERS ARE SELECTED BY ZONE MANAGEMENT ON THE BASIS OF TRUCK SALES PERFORMANCE, ETC.

- THE TRUCK DEALERS VISITED WILL INCLUDE "DUAL" FRANCHISES (DODGE/FORD, DODGE/CHEVY OR DODGE/GMC) AND OWNERS OF MULTIPLE TRUCK FRANCHISES. IT IS IMPORTANT THAT BOTH THE DODGE AND COMPETITIVE DEALER TRUCK MANAGERS BE PRESENT.

- WHEN AN INTERESTING OR IMPORTANT COMMENT IS MADE BY A DEALER, TIME SHOULD BE SPENT GETTING THE DETAILS OF WHY THEY HAVE THIS OPINION, ETC.

- IN GENERAL IT IS RECOMMENDED THAT VISIT PARTICIPANTS CONSOLIDATE THE DEALER VISIT MINUTES/NOTES THE EVENING IMMEDIATELY FOLLOWING THE VISIT.

- DEALER VISIT PARTICIPANTS ARE ADVISED TO BRING AN AMPLE SUPPLY OF BUSINESS CARDS.

PAUL V. SHERIDAN OF ADVANCE PLANNING IS COORDINATING THE TRUCK DEALER VISITS AND CAN BE CONTACTED ON EXTENSION 6-0341, CIMS NUMBER 415-03-10. IF NOT AVAILABLE, CONTACT LARRY A. TURNER, EXT. 6-6068.

ADVANCE PLANNING
REV. 03/25/86 400/TDV

TAB 6

“THOUGHT STARTERS” QUESTIONAIRE

TRUCK DEALER VISITS - PHASE I

THOUGHT STARTERS

POWERTRAIN

- o General comments on Dodge Truck driveability? Serviceability?
- o Are Dodge engines sized correctly?
- o Does Dodge need a large gas V-8?
- o Does Dodge need a diesel in the pickup? Van/wagon?
- o Does Dodge need fuel injection? Throttle body? Multi-point?
- o General comments on Dodge transmissions?
- o Does Dodge need a heavy-duty overdrive automatic? Light duty?
- o Which competition is the strongest in powertrains? Why?
- o Where do the Japanese stand on powertrain? Where are they headed?

CHASSIS

- o General comments on ride quality? Payload? NVH?
- o Durability
- o Is Dodge 4WD performance adequate?
- o Which vehicle construction mode is appropriate for van/wagons: full frame or unitized?

INTERIOR

- o Does Dodge need an extended cab pickup? Crew Cab?
- o General comments on interior lay-out? Quality?
- o Split bench seats?
- o Radios?
- o Ergonomics?
- o Color selections/combinations?

EXTERIOR

- o General comments?
- o Should Dodge pursue a composite pickup box?
- o Should a major design change be pursued (e.g. aerodynamic) or major/minor freshening?
- o Are the bumpers adequate?
- o Paint quality? Color selection? Any additions? Deletions?

OTHER

- o Overall comments on quality
- o Customer perceptions
- o Competitive dealer perceptions
- o Market/Competitive trends
- o 5/50 Protection Plan (competitive warranties?)
- o Competitive strengths? Weakness?

TAB 7

ZONE VISIT SCHEDULE

TRUCK DEALER VISITS - PHASE I SUMMARY REPORT

ZONE VISIT SCHEDULE

ZONE	NUMBER OF DEALERS	VISIT DATE*	PARTICIPANTS	ORGANIZATION
San Francisco	4	02/23/86	T. DeBoer	Truck Operations
			W. D. McAuley	Manufacturing Feasibility
			D. H. Olsen	Financial Planning
Chicago	4	03/02/86	E. J. Perkins	Manufacturing Feasibility
			R. E. Pfeifer	Program Management
			T. A. Skemp	Advance Power Train Planning
Orlando	3	03/09/86	T. B. Gage	Advance Power Train Planning
			R. R. Reeder	Body Components Planning
			P. V. Sheridan	Advance Planning
Los Angeles	3	03/16/86	R. E. Pfeifer	Program Management
			L. A. Turner	Advance Planning
Cincinnati	4	03/16/86	T. DeBoer	Truck Operations
			E. J. Perkins	Manufacturing Feasibility
			T. A. Skemp	Advance Power Train Planning
New York	4	03/30/86	A. C. LaCroix	Vehicle Packaging
			J. E. Reece	Advance Planning
Houston**	4	04/06/86	R. E. Burnham	Advance Planning
			R. O. Eccles	Advance Planning
			J. M. Hossack	Components Planning
			D. H. Olsen	Financial Planning
			K. J. Price	Truck Operations
			L. A. Turner	Advance Planning
Dallas	2	04/06/86	J. M. Hossack	Components Planning
			K. J. Price	Truck Operations
			L. A. Turner	Advance Planning
Boston	4	04/13/86	R. E. Burnham	Advance Planning
			J. R. Thomson	Product Systems Planning
			H. C. VonRusten	Program Management
Syracuse	3	04/20/86	P. V. Sheridan	Advance Planning
			T. A. Simonsen	Truck Operations
			F. B. Whelan	Power Train Components Planning

* Week beginning.

** Included coordination/participation in Houston Truck & Features Research.

ADVANCE PLANNING
REV. 05/06/86 T6/PVS.14

TAB 8

TYPICAL ZONE VISIT CONFIRMATION LETTER

CHRYSLER CORPORATION

March 25, 1986

Mr. Eric R. Kaplan
Truck Manager
Houston Sales Zone Office
CHRYSLER CORPORATION
P. O. Box 60507
Houston, TX 77205-0507

Dear Mr. Kaplan:

SUBJECT: TRUCK DEALER VISITS

As promised, I am enclosing the itinerary for the upcoming visit by Chrysler Center personnel to the selected truck dealers in the Houston zone.

The general purpose of these meetings is to discuss the present and future requirements of the full-size pick-up and van/wagon markets. In general it is highly recommended that both the Dodge truck manager as well as the competitive truck manager be present during these meetings. Specific discussion items should include buyer wants/needs, Dodge truck product strengths/weaknesses, advertising copy, etc. Additional items, such as power train issues, minivans, etc. are also a welcome part of what will prove to be productive and informative discussions.

Again, the field visit teams are comprised of representatives from three or four functional groups that have direct impact on the Dodge truck product. I can assure you that these individuals have been selected to participate as a result of their admirable ability to relate to and effect the comments/suggestions from our all-important truck dealer body. They sincerely look forward to meeting with the selected dealers in your zone.

If there are any questions with respect to the subject, please do not hesitate to contact me on (313) 956-0341 or 8-876-0341 or Larry Turner on 8-876-6068.

Sincerely,

Paul V. Sheridan

Paul V. Sheridan
Advance Vehicle Planning

Enclosure
400 PVS.5C

cc: Mr. Jack Apple, Jr., Greenspoint Dodge
Mr. Ramsay Gillman, Gillman Dodge
Mr. Dom Torres, Mac Haik Dodge
Mr. Mike Hall, Mike Hall Dodge
Mr. T. R. Marinelli, Zone Manager

TRUCK DEALER VISITS - PHASE I

TRIP ITINERARY

TEAM #7 - HOUSTON/DALLAS ZONES

	ORGANIZATION	LOCATION	DEPT.	CONTROL #
R. E. Burnham*	Advance Plng.	1225	4810	T-81238
R. O. Eccles*	Advance Plng.	1225	4810	T-81239
J. M. Hossack	Components Plng.	1225	4820	T-75569
K. J. Price	Truck Marketing	2700	2511	T-05352
L. A. Turner	Advance Plng.	1225	4810	T-75571

* HOUSTON ONLY

APRIL 3, 1986 (THURSDAY) - R. E. Burnham

- Continental Flight #393 (International Airport) — Departs Detroit 8:15 a.m. / Arrives Houston 10:00 a.m.
- Shuttle service to Westin Galleria provided every 20 minutes via the Post Oak Terminal. A block of rooms is reserved for Chrysler personnel.

APRIL 4, 1986 (FRIDAY) - R. O. Eccles/K. J. Price/L. A. Turner

- Republic Flight #289 (Hobby Airport) — Departs Detroit 1:10 p.m. / Arrives Houston 3:05 p.m.

APRIL 4, 1986 (FRIDAY) - J. M. Hossack

- American Flight #317/271 (Hobby Airport) - Avis Rental — Departs Detroit 7:05 p.m. / Arrives Houston 10:47 p.m.
- Take shuttle service to Westin (See April 3)

APRIL 7, 1986 (MONDAY) - R. E. Burnham/R. O. Eccles/J. M. Hossack/K. J. Price/ L. A. Turner

- 7:30 a.m. Meet Eric Kaplan/Ed Eskola (Houston Zone, 713/820-6823) for breakfast in Westin lobby.
- 9:00 a.m. Gillman Dodge (REB/ROE with Eric Kaplan)
  Mike Hall Dodge (JMH/KJP/LAT with Ed Eskola)
- 1:30 p.m. Mac Haik Dodge (REB/ROE with Eric Kaplan)
  Greenspoint Dodge (JMH/KJP/LAT with Ed Eskola)
- Contental Flight #392 (REB/ROE) — Departs Houston 7:10 p.m. / Arrives Detroit 10:40 p.m.

- -

- Continental Flight #163 (JMH/KJP/LAT) — Departs Houston 7:55 p.m. / Arrives Dallas 8:50 p.m.
- Take shuttle service to Marriott DFW, three separate rooms reserved (JMH/KJP/LAT).

APRIL 8, 1986 (TUESDAY) - J.M. Hossack/K. J. Price/L. A. Turner

- 7:30 a.m. Meet Fred Salinas/Michael Hale (Dallas Zone, 214/242-8449) for breakfast in TBD lobby.
- 9:30 a.m. Preston II Chrysler-Dodge
- 2:30 p.m. Irby Chrysler-Dodge
- American Flight #158 — Departs Dallas 8:00 p.m. / Arrives Detroit 11:15 p.m.

ADVANCE PLANNING
REV. 03/24/86 400/TI4

TRUCK DEALER VISITS - PHASE I

HOUSTON AND DALLAS ZONES

DEALER	VISIT TIME/DATE
Mr. Ramsay Gillman GILLMAN DODGE 7157 Fongren Road Houston, TX 77036	Monday; April 7, 1986 9:00 a.m.
Mr. Mike Hall MIKE HALL DODGE 10650 Eastex Freeway Houston, TX 77093 713/695-2455	Monday; April 7, 1986 9:00 a.m.
Mr. Dom Torres MAC HAIK DODGE 11890 Old Katy Road Houston, TX 77079 713/870-9999	Monday; April 7, 1986 1:30 p.m.
Mr. Jack Apple, Jr. GREENSPOINT DODGE 11655 North Freeway Houston, TX 77060 713/820-3355	Monday; April 7, 1986 1:30 p.m.
- - -

TAB 9

INDIVIDUAL ZONE VISIT REPORT:

SAN FRANCISCO

Inter Company Correspondence

Telephone: N-ICC-F-35 | Date: March 4,1986

To — Name & Department: R. E. Eccles, Program Planning Chief, Special Programs, Chrysler Center | CIMS Number:

From — Name & Department: (See Below) | CIMS Number:

Subject: **DEALER VISITS-SAN FRANCISCO ZONE**

FROM: T. deBoer W. D. McAuley D. H. Olsen

The following dealers in the San Francisco Zone were visited by the undersigned:

Electric Garage
Swift Dodge
Dodge Center
Vallejo Dodge

The attached listing encompasses comments received from each dealership and are broadly divided into powertrain, standard pickup, standard van/wagon and sport utility. Each dealership had a somewhat unique market, orientation and sales approach:

o **Electric Garage** - (Lonie Prichard)

A smaller dealer which serves the local farming community and is oriented toward the commercial/business vehicles with a particular concentration on powertrain needs for work trucks.

o **Swift Dodge** - (Chuck and Bob Swift)

This large volume dealership is located in a more urban setting and serves the personal truck needs along with a concentration on commercial/government fleet bids.

o **Vallejo Dodge** (Ron Barber - dualled with Chevrolet and Jeep)

A suburban dealership where truck sales are primarily concentrated toward the personal use. Competitiveness in specifications and appearance are important elements in the sales effort.

o **Dodge Center** - (Gene Johnson - sales manager)

Primarily a suburban dealership which sells to the personal use customer but has recently become aware of the stake truck market and is beginning to move in this direction. Organization is primarily sales oriented and less concerned about product features and specifications.

T. deBoer W. D. McAuley D. H. Olsen

cc: E. S. Clark P. V. Sheridan
P. J. Keegan J. L. Worley

84-110-7878

SAN FRANCISCO ZONE - DEALER VISIT COMMENTS

ELECTRIC GARAGE - LONIE PRICHARD

General:

- Dodge, no image - Ford is status symbol
- Niche vehicles/features are important
- Stretched T115 will affect (reduce) fullsize van/wagon sales.

Powertrain:

- Six cylinder Dodge not adequate, lack of power.
- 360 - lack of power
- Transmission, need manual offerings especially D-250 with 318
- Need 5 speed manual in 3/4 and 1/2 ton
- Need deeper axle ratio availability
- Need Diesel for power and economy (note: need large air cleaner for dusty area)
- Diesel would cover R/V and Trailer Tow powertrains. Need 3.9 ratio with 833 transmission
- Could replace 360 with 426
- 318 with adequate gearing could supplant current 360 if big gas was available
- Fuel injection - good selling point. No difference TBI vs. MPI for customer

Pickups - Fullsize

- Rear springs seem weak and sag. Ford does a better job
- 4X4 solid axle better than IFS
- Rear axle semi-float perceived as not as good as full float
- Vacuum track lock can get dirt bound, prefers manual hubs
- Traditional buyer prefers square, durable look (not Aero look)
- Sheetmetal, just change enough so that truck is "new" to customer

Pickups - Fullsize

- o Priority: powertrain first, sheetmetal second
- o Cab sizes: prefer extended cab over adding just 6", but any extension is a plus. In overall priority 'N' extended cab should be first.
- o Toughness is "good enough" need other things now
- o Tailgate not strong enough, when loaded fails, cannot repair weld - on hardware
- o Current chassis is O.K. - ride, handling, durability, etc.

Van/Wagon

- o Front End, premature tire wear problem
- o Engine placement better than Ford. Dodge has better serviceability, also shorter and easier parking
- o Sliding door, poor maintenance and function
- o Single rear door is a problem with towing vehicles, cannot open

Sport Utility

- o Status vehicle, very little actual off road use
- o Dakota derivative is preferred
- o Rambo type vehicle with convertability not acceptable
- o Serious off road enthusiasts use Jeeps or short wheelbase pickups.

SWIFT DODGE - CHUCK AND BOB SWIFT

Powertrain

- o Limited powertrain availability
  - Engines, need big gas
  - Transmissions, need more manual offerings
  - Axles, need more ratio availability
  - Increase offerings of powertrain combination
- o Cannot drop 360 in lieu of big gas, need 360 for Ramcharger, 1/2 ton pickup and 'B' wagons.
- o Need either a big gas or big diesel. Ford is selling a lot of diesels in his market

Powertrain

- o 3 speed automatic A-727 is O.K., don't need 4 speed
- o Fuel injection, need as soon as possible
- o TBI or MPI is O.K., customer does not recognize difference

Pickup

- o Current chassis is O.K., but 4 wheel drive noisy in low range.
- o Do not want fulltime 4 wheel drive
- o Ramtrack is O.K., prefers manual hubs
- o Composite components O.K., probable market advantage
- o Bench seat must have on pickup. 60-40 is O.K. as long as 3 person seating is retained. Need for legal child seating requirements
- o Extended cab (+6") would be excellent. Club cab option would be good.
- o Current seating package - retain, don't raise 'H' point. Ingress and Egress problems, buyer resistance
- o Need new I.P. but no excess with electronics. No electronic graphics
- o Appearance, Aero is O.K., but don't radically change conventional pickup truck appearance.
- o With Dakota, big pickup will be more work, commercial oriented
- o 4X4 pickup needs to get good fuel economy
- o Note: Dakota will be a sales success with 97% V6 sales.

Van/Wagon

- o Need new appearance, more Aero look (Toyota?)
- o Current pricing is too high
- o Van Conversion market is being lost due to high "chassis" cost.
- o Note: Dual doors needed on 'S' Body
- o Engine location should stay where it is, better engine serviceability and shorter vehicle. Need to improve passenger foot room
- o No market for full size front wheel drive van/wagon or pickup

Van/Wagon

- o Consider accommodation of handicapped/wheelchairs
- o Sliding door not acceptable 'S' Body design probably O.K. Single rear door and double rear door are needed, also better latching.

Sport Utility

- o Dakota sport utility is needed in 4 wheeldrive configuration as number one priority, even over 'N' extended cab.
- o Fullsize Ramcharger can then be dropped
- o Rambo conversion concept not acceptable, just design a good unit without conversion compromises
- o Small sport utility will attract upscale conquest buyers
- o Sport Utility buyers are primarily upscale, mostly (60%) driven by women. Multi-purpose use from shopping to weekend mountain trips
- o Sport Utility is best growth opportunity
- o T-115 4 wheeldrive is a great idea, but don't shorten the vehicle. Extra capacity is a real plus, 7 passenger capacity, etc.

Miscellaneous

- o On T-115 the V6 availability is more important than stretch
- o Quality, a steady improvement noticed every year, dramatic 1983 through 1986.

VALLEJO DODGE - Ron Barber

Powertrain

- o Fuel injection, M.P.I., very important - not T.B.I.
- o Ford diesel very hot, sold at $1000 over sticker, also used + $1200 premium, G.M. diesel retains stigma.
- o Diesel in Ford vans is a good seller
- o 360 gears are too tall
- o Need A-727 4 speed
- o Diesel with turbo, turbo might be perceived as a weak point, durability may be questioned

Powertrain

- o Big gas is better than diesel
- o Need 5 speed manual transmissions
- o 318 in Ramcharger is not adequate, need 360
- o 318 in 1/2 ton is O.K. but need EFI as soon as possible
- o Need to "leap frog" in powertrain area, "we are behind"

Pickup

- o Chassis is good, better than Ford and Chevrolet
- o Need utiline for matcho customers
- o Short wheelbase is a must
- o A longer cab (+ 6") is a good idea
- o Pickup is primarily for personal use and usually sold fully equipped
- o Fifth wheel pickup trailer tow is important, need dual rear wheel pickup
- o 60/40 seat a good idea, need fold down armrests, vinyl won't sell
- o Need new appearance, not just grille. Ford is best in appearance. '87 Chevrolet appearance is in the right direction
- o Higher 'H' point is no good. Ingress and Egress is worse, especially for older people buying 3/4 ton for R/V purposes as an example
- o Composite box is no advantage, stay with steel
- o Replace I.P. as soon as possible, electronic features would be good
- o Quality paint is biggest problem
- o Dual exhaust, two separate tailpipes is a must for 360
- o 4X4 - IFS is preferred over solid axle

Van/Wagon

- o Current interior and exterior appearance is O.K. but would like new IP and raked W/S angle
- o Engine cover intrusion is no problem
- o Doors retain all options but change side swing doors to 1/3 - 2/3

Van/Wagon

- o No crossover consideration from T-115 to 'B' van
- o Note: Price is too high and need financing for van conversions
- o T-115 conversion with stretched model will probably sell better

Sport Utility

- o Need fullsize and small
- o Small - need 2 door and 4 door
- o Convertability questionable
- o Need 2 wheel drive option for small Ramcharger
- o Need IFS 4 wheel drive
- o Engage 4 wheel drive while moving
- o Full size Ramcharger with big gas engine would be a hot seller

DODGE CENTER - GENE JOHNSON

Powertrain

- o Need 360 in all applications
- o Fuel injection not important
- o Bigger gas needed, do not drop 360
- o Diesels will not sell, based on Chevrolet's experience
- o All transmissions are O.K. as is

Pickup

- o Chassis O.K., good ride and handling
- o Appearance good
- o Longer cab (+6") good feature
- o Wants short wheelbase utiline
- o Don't raise 'H' point. Caravan sells better than Astro because of height difference
- o Composite box no good, need steel for tough image

PICKUP

- o Maintenance and durability O.K. today
- o 4X4 IFS better than solid front axle
- o Tough appearance better than Aero look. No sloping hood
- o Need younger buyers
- o 60/40 seat very desirable
- o Interior appearance O.K., no change needed
- o Need dual wheel pickup
- o NOTE: Good truck market but owned by Ford

Van/Wagon

- o Interior and exterior O.K., no need for change
- o Engine location is good, don't change. Ford owners that buy Dodge like it, can use engine cover as console
- o Doors O.K., retain options
- o Also need 360 in all applications
- o 'B' Karyvan - good market

Ramcharger

- o Mexico Source, poor quality image
- o Need small utility, also retain large Ramcharger
- o If only one, small is preferred
- o 4 door better than 2 door for carrying people
- o Removable roof would be good
- o No demand for 4X4 T-115

TAB 10

INDIVIDUAL ZONE VISIT REPORT:

CHICAGO

Inter Company Correspondence

To — Name & Department		Telephone	Date	CIMS Number
		REP/PVS3-6	March 6, 1986	
P. V. Sheridan,	Program Planner - Advance Product Planning	HP		415-03-10
From — Name & Department				CIMS Number
R. E. Pfeifer,	Manager - RWD Trucks Program Management	HP		418-04-18

Subject:

PHASE I TRUCK DEALER VISITS

R. E. Pfeifer, E. J. Perkins and T. A. Skemp visited the following dealers in suburban Chicago on March 3 and 4, 1986:

Heritage Dodge
Glen Ellyn Dodge
Al Piemonte Dodge
Elmhurst Dodge

Heritage Dodge

The current owner recently moved to a new facility after buying out an unsuccessful dealership at another location and turning it around. He also runs a large Pontiac dealership dualed with Mazda, a full line Ford dealership, and a GMC Truck dealership, all located on the same auto row. The owner, his Dodge General Manager, and his Ford Truck Manager participated in the discussion.

The dealer's father owns several additional dealerships in the same area.

Glen Ellyn Dodge

The discussion was with the active partner. The silent partner is his father who owns the neighboring Ford dealership where the Dodge dealer obtained his experience.

Al Piemonte Dodge

The owner has the largest Ford dealership in the Chicago area which is also one of the largest in the U.S. He recently purchased the Dodge dealership after terminating a Dodge franchise several years ago. He also owns a Nissan dealership and a Chevrolet dealership.

The discussion was with the owner, his Dodge General Manager and his Ford Fleet Sales Manager.

Elmhurst Dodge

The discussion was with the majority partner who was formerly the leading G.M. sales person in the Chicago area.

This trip report is made as a series of the dealers' statements in the hope it will be easier for you to meld with other reports and draw consensus conclusions.

The following were unanimous statements:

- There is nothing wrong with our products from a feature or quality standpoint.
- Dodge quality has improved significantly in the last five years.
- Dodge commercials are great but we need more advertising.
- Ford has the image and is entrenched.
- Pricing is the name of the game. We need less price, particularly on full size wagons. They are unaffordable.
- Astro and Aerostar are definately affecting full size wagon sales.
- The extended warranty has been a big help.
- We need a bigger 6 cylinder.
- Fuel economy is important.
- We need a 4-speed automatic, then you can drop the 3-speed.
- You do not need a manual transmission in full size van/wagon, even with a 6 cylinder.
- The 318 has a good reputation.
- Frame vs. uni-body is not a buy consideration on vans/wagons. Customer does not know what's under there.
- The B models are the right size for their segment. Do not see any advantage to more sheetmetal out front.
- Fewer free fall options and more packaging of options would be okay. The Ford rapid spec packaging system works well. It simplifies our stocking and we can sell a higher percentage direct from stock.
- Do not need more behind the seat storage room on pickups. It would make the cost more. Price is important. A club cab would be better.
- The Dakota is about the right size but the price has to be right.
- A club cab is important in the Dakota.
- A Dakota sport utility is important. It needs more than two doors. Three doors would be okay (rear side-curb side door). Ford's biggest product complaint is lack of rear seat entry in Bronco II.

The following are comments that were not unanimous:

- Three dealers felt we needed more incentive programs. One dealer felt our incentives were adequate.

- Two dealers thought we might do okay with fewer exterior colors. One dealer wanted more colors. Two dealers thought our color selection should be more bright (like Ford).

- One dealer said the full size pickup needs strong, trucky, traditional styling. Aero styling is sissy.

- One dealer said the new Fords and Chevys will have aero styling and it will go over.

- One dealer complained about being shut out from many fleet sales because he had to order 15 trucks minimum to get a special fleet color. This dealer has a Ford store and can get any of 325 fleet colors, for +$26, for major fleet, $60 for small fleet, and $140 for single.

- One dealer thought solid axle vs. IFS in full size 4X4 was not an important distinction.

- One dealer thought we need a modern 5-speed O.D. box in full size pickups.

- One dealer suggested that the ram hood ornament needs to be modernized and smaller.

- One dealer thought a Dakota S/U should have a sliding side rear door and one thought that the door should be hinged.

- One dealer thought a convertible cargo area in the S/U would be okay. Three dealers thought we should target the S-10 Blazer but with rearside door.

R. E. Pfeifer

cc: E. S. Clark
D. E. Dawkins
R. O. Eccles
P. J. Keegan
E. J. Perkins
T. A. Skemp
H. C. von Rusten

TAB 11

INDIVIDUAL ZONE VISIT REPORT:

ORLANDO

Inter Company Correspondence

Telephone	Date
T6/OZ OZA	April 7, 1986

To — Name & Department			CIMS Number
R. O. Eccles	Chief Advance Product Development	Chrysler Center	415-03-10

From — Name & Department			CIMS Number
T. B. Gage	Advance Power Train Programs		415-03-10
R. R. Reeder	Body Components Planning	Chrysler	415-03-08
P. V. Sheridan	Advance Product Development	Center	415-03-10

Subject: TRUCK DEALER VISITS - ORLANDO ZONE

The following truck dealers of the Orlando Zone were visited by the undersigned:

o **SUNSET CHEVROLET/DODGE** - Sarasota, FL
- Floyd Clements - General Manager
- Trevor Einhaus - Chevrolet Truck Sales Manager
- Don Osborne - Dodge Truck Sales Manager

o **SAM GALLOWAY DODGE/FORD** - Fort Myers, FL
- Joe Franklin - Ford Truck Sales Manager
- Arthur Miller - General Manager
- Howard F. Yantis - Dodge Truck Sales Manager

o **ED MORSE CHEVROLET/DODGE** - Fort Lauderdale, FL
- Glenn Aumen - Chevrolet Truck Sales Manager
- Ted Morse - President

The attached listing encompasses comments received from each dealership and is broadly arranged into power train, full-size pickup, full size van/wagon and general.

Tom Gage
T. B. Gage

PVS for
R. R. Reeder

Paul V. Sheridan
P. V. Sheridan

mas

ATTACHMENT

cc: J. E. Holtslag
R. C. Horn (Orlando Zone)
G. L. Rinschler
F. J. Sherwood (Orlando Zone)

84-110-7878

ORLANDO ZONE - TRUCK DEALER VISIT COMMENTS

SUNSET CHEVROLET/DODGE - Monday; March 10, 1986

Power Train:

- o General performance and driveability of 318/360 engines is good - no major complaints.

- o Commercial business participation would be greatly aided by large gas engine to compete with Ford 460 and Chevy 454.

- o Poor past market performance of Chevy diesel still affects saleability of diesels in general.

- o Priority should be large gas first - not that interested in any diesels at this time; diesels not even stocked.

- o Full engine line availability (six cylinder; small, medium, large V8 gas; and diesel) a real strength for Ford/Chevy.
  - Dodge does not fully participate in truck market due to limited engine line coverage.

- o Fuel injection per se not critical to Sarasota market at this time - but it is an emerging issue and should be included as quickly as possible.

- o Distinctive Chrysler starter motor noise does not project a quality image.

- o Dealer feels public has misconceived perception of the automatic overdrive option. Does not see automatic overdrive as a high priority. Public utilized overdrive during heavy towing causing extensive engine and transmission wear.

- o Light-duty automatic overdrive is desirable.

- o Four speed manual transmission as standard equipment is a high plus for Dodge considering that 3 speed column shift is standard on Chevrolet...upgrade to 4 speed floor shift is $115 extra.

- o Chevrolet O.D. automatic sells for $400 over 3 speed automatic. Typically requested by small V8 buyers or light-duty cycle buyers.

- o Presently buyers are not requesting 5 speed manual transmission. However the import market has made them aware of the capabilities of the 5 speed transmission. General consensus seems that 5 speed transmission may be and option for future light-duty trucks.

- o In Sarasota 4WD units are usually sought by commercial buyers (i.e. construction). Minor market.

ADVANCE PLANNING
REV. 04/07/86 T6/OZ1

ORLANDO ZONE - TRUCK DEALER VISIT COMMENTS
(CONTINUED)

SUNSET CHEVROLET/DODGE - Monday; March 10, 1986

Power Train (Continued):

- o Ford I.F.S. is considered inferior to solid front axle due to serviceability/durability issues.

- o Dealer/market not cognizant of Ram Trac system vs. manual locking hub or automatic locking hubs. Needs more Corporate advertising support.

Pickups

- o Continuing strong market seen for ¾ and 1 ton; payload encroahment by small/medium size trucks into ½ ton range may hurt those entries.

- o Ford image/product worth up to $500 over competitive pickups with respect to conquest sales.

- o Pickup truck buyers extremely brand loyal.

- o Fleet sales should include 5/50 warranty protection regardless of fleet size. Presently, once fleet size reaches 10+ vehicles this disqualifies owner for 5/50 protection - totally inconsistent with 5/50 marketing theme.

- o Emphasis of Chevy truck sales is commercial/fleet. Dodge buyers typically younger/private-use oriented.

- o Seventy-five percent of commercial Chevy 30 vehicles are ordered with large gas (454 cu. in.); one-ton vehicle market dominated by Ford/Chevy.

- o Commercial buyers not sensitive to styling, functionality emphasized.

- o Market share a long term issue, continuous product reliabilty image imperative; Ford has been most successful.

- o For Dodge, a large gas engine should be timed with dual rear wheel cab-chassis entry.

- o Crew/Club cab vehicles are highly specialized and represent a small percent of the market.

ORLANDO ZONE - TRUCK DEALER VISIT COMMENTS

(CONTINUED)

SUNSET CHEVROLET/DODGE - Monday; March 10, 1986

Van/Wagon

- o Short wheelbase RWD wagon (B150 with 109" W.B.) has potential to compete against RWD Astro/Aerostar. National advertising support needed.

- o LWB/V6 T115 considered competitive versus Astro/Aerostar in commercial market.

- o Less market emphasis on full-size van/wagon (versus T115/Astro/Aerostar) but should be retained for commercial sales. Minivans taking higher share of market.

- o Full-frame vs. unitized construction not considered a factor.

- o Dodge Van/Wagon considered superior in styling, interior and serviceabilty versus Ford/Chevy entries. Fully dressed Dodge wagon very attractive.

- o Wagon would benefit from fuel economy gains via 4 speed overdrive automatic option. Currently nearly all Chevy wagons are ordered with 4 speed O.D. at $400 over base automatic transmission. Consumer acceptability/awareness very high.

General

- o All Chrysler vehicles experience frequent battery problems...a real headache.

- o Ultimate sound radio good but speakers and speaker placement degrades system performance. Pricing considered too high.

- o Composite pickup truck box could be a real plus for corrosion/payload benefits.

- o Dodge full-size and minivan serviceabiltiy good; should continue to be emphasized.

SAM GALLOWAY DODGE/FORD - Tuesday; March 11, 1986

Power Train

- o Fuel injection badly needed on trucks; a definite weakness versus Ford. Customers "love" Ford's 302 MPI engine.

- o 318 has good reputation but needs more power.

- o 360 needs better fuel economy; power is adequate.

ORLANDO ZONE - TRUCK DEALER VISIT COMMENTS

(CONTINUED)

SAM GALLOWAY DODGE/FORD - Tuesday; March 11, 1986

- Large gas engine not the priority versus diesel; would be able to sell a good diesel. Ford/IH 6.9L a good seller.
- "Slant Six" engine quality deteriorating rapidly; needs help.
- Five speed manual transmission mostly oriented at youth at present; Imports making customers more aware however and should be offered in the future.
- Manuals in general are good pieces; clutch quality also "good".
- Lack of overdrive lock-up automatic not a problem at present; could be in the future. Would like to offer fuel injected 318 with AOD, especially in B-150 wagons.
- Rear axle ratio availability is adequate.

Pickups

- Ford makes and is known for the best pickup. A status symbol; superior quality reputation, trade in value, etc. Ford would "kill" pickup truck market if they had GM's merchandising muscle.
- F-150 not hurt by Ranger; N-Body "shouldn't" hurt D-150.
- Dodge pickup styling very old; "Dodge styling helps sell the Fords!" Dodge badly needs "dress-up" to make it to the 1990's.
- Dodge pricing a little high.
- Lack of Utiline availability not a problem.
- Dodge quality a pleasant surprise especially to new buyers. Still improving.
- Dual rear wheel deletion a big mistake; very lucrative in this zone.
- Ford's twin I-beam front suspension no longer a problem; alignment problems of the past are now fixed.
- Solid front axle on Dodge not an issue versus IFS; sellable to 4WD buyers.

ORLANDO ZONE - TRUCK DEALER VISIT COMMENTS

(CONTINUED)

SAM GALLOWAY DODGE/FORD - Tuesday; March 11, 1986

Van/Wagon

- o 12/15 passenger market appears to be drying up. Don't need 12 passenger; you can get 12 from the 15, not the reverse. Eight passenger business okay.
- o B-150 not well known; not adequately supported by Corporate advertising. SWB B-150 should be pitted against Ford Aerostar and GM Astro leaving minivan market for "Chrysler only".
- o Spring/summer best time to "push" wagons due to vacations, etc. "Travel package" not recognized by customers; needs advertising support.

General

- o V6 Dakota will be big seller; small V8 would be a "killer".
- o Minivan is underpowered; needs V6 since Ford uses V6 as "hook" versus T115. T115 serviceability far superior to Aerostar.
- o Availability of medium/heavy truck line-up may help light duty image.
- o 5/50 a real winner, helps a bunch.
- o Sport utility the priority over extended cab - must have quickly; we're losing ground/showroom traffic.
- o Dodge truck advertising copy very weak. Does not do justice to the product - Dodge pickup should be copied as a "work truck".

ED MORSE CHEVROLET/DODGE* - Wednesday; March 12, 1986

Power Train

- o Does not stock diesels for Chevy; Ford does not suffer from same diesel "Stigma".
- o 454 large gas a real plus; practically all "dualies" go with 454.
- o Chevy trucks sell with automatics (90%).
- o Has not experienced specific requests for fuel injection; carburetor driveability appears adequate for zone.
- o Buyers unaware of overdrive automatic offerings; generally the transmission is upgraded to AOD if package is upgraded, otherwise AOD is ordered upon customer request only; AOD available in ½ and ¾ ton.

* DODGE TRUCK MANAGER NOT PRESENT.

ORLANDO ZONE - TRUCK DEALER VISIT COMMENTS

(CONTINUED)

ED MORSE CHEVROLET/DODGE* - Wednesday; March 12, 1986

Pickup

- o Dodge pickup offers no "excitement" to buyer.
- o Chevy sells "cheap but pretty"; as long as exterior looks good, you can get away with cheap interior and equipment loadings.
- o New "Aero" look expected to be good seller for 1987 Chevy; "1970's tough-guy look is out".

Van/Wagon

- o Full-size wagon market no longer as strong; limo service, church, and school bus use mainly. Astro seriously invaded this market.
- o Full-size work van market still very strong.

General

- o Sport utility market strong and growing; women driving as primary vehicle.
- o 2WD sport utility market strong in Florida for towing boats, etc.
- o Astro mainly sells with V6.
- o Composite pickup truck box would be a real plus for Florida market; (solves corrosion from salt, etc.).

* DODGE TRUCK MANAGER NOT PRESENT

TAB 12

INDIVIDUAL ZONE VISIT REPORT:

LOS ANGELES

Inter Company Correspondence

To — Name & Department		Telephone	Date	
		T5/LAZ	April 3, 1986	
				CIMS Number
R. O. Eccles	Chief Advance Product Development		Chrysler Center	415-03-10
From — Name & Department				**CIMS Number**
R. E. Pfeifer	Vehicle Program Management		Chrysler	418-04-18
L. A. Turner	Advance Product Development		Center	415-03-10

Subject:

TRUCK DEALER VISITS - LOS ANGELES ZONE

The following dealers in the Los Angeles Zone were visited by the undersigned:

Pete Ellis Dodge - Southgate
Cal Worthington Dodge - Huntington Beach
Holmes-Tuttle Dodge - Irvine

The attached summary of the comments received is divided into the topics of power train, standard pickup, standard van/wagon and sport utility. Each dealer offered a different perspective on the Los Angeles truck market:

PETE ELLIS DODGE - (Pete Ellis)

Mr. Ellis' dealership is located adjacent to his AMC/Jeep dealership. Heavy advertising is an integral part of the sales effort and usually concentrates on a single model each week. For example, when Ramchargers are being advertised, they will be mass displayed in front of the dealership.

CAL WORTHINGTON DODGE - (Phil Love and Jerry Hansink from Worthington Ford)

The organization is primarily sales oriented. The trucks sold are mostly for personal use.

HOLMES-TUTTLE DODGE - (Ken Ellegard and Charlie Dodd from Holmes-Tuttle Ford)

They are located in a car mall which also includes a Toyota dealership under the same owners. The organization was somewhat more attuned to the importance of product features and specifications than the other two dealerships.

L. A. Turner
L. A. Turner

R. E. Pfeifer
R. E. Pfeifer

mas

cc: E. S. Clark
P. J. Keegan
P. V. Sheridan
P. F. Tegan

84-110-7878

LOS ANGELES ZONE - DEALER VISIT COMMENTS

PETE ELLIS DODGE - PETE ELLIS

Pickups - Full-Size

- Full-size pickup needs new styling but should still be macho, not aero.
- We have an old truck.
- Ford has the "best truck" image because they have such a head start. Dodge has been small in the market for so long, that it will take a big effort now (price and advertising) to make inroads.
- Club cab is not important. Some storage behind seat would help.

Van/Wagon

- Full-size van/wagons have gotten to be too expensive for many buyers.
- Our van/wagons are pretty well done - no major product problems or shortcomings.
- Full-size van/wagons are right size but need some aero styling.
- Customer does not know or care about frame vs. unibody.

Sport Utility

- Ramcharger is a dinosaur.
- We need a 4-door sport utility.
- The market is S-10 Blazer size.
- A new sport utility should be somewhat macho, i.e. "Marlboro man". Cherokee and Bronco II should be the targets.
- Needs strong frame and good suspension.
- The new sport utility should stick to the current market concept, i.e., no RAMBO or T115 4WD. Dakota derivative with 4 doors would be about right.

CAL WORTHINGTON DODGE - PHIL LOVE AND JERRY HANSINK

General

- No matter what you build in Detroit, if you build it right and it works, we can sell it.
- Need more factory advertising to get more sales. Need more LAI advertising.
- Pricing should be right the first time so you don't need rebates - make 'em cheaper.
- Fewer options available would allow a higher percent of sales from stock.
- Quality is good - the factory is putting them together very well.
- Delivery condition is important, i.e., headlights aimed correctly. The Prep Center could do a better job.

Power Train

- A 4-speed automatic O.D. transmission is needed.

Pickup - Full Size

- The pickup needs new styling.
- Could use storage behind the seat.

Sport Utility

- Ramcharger price is out of sight. Needs to be priced less than Ford and Chevy to develop a following.

HOLMES-TUTTLE DODGE - KEN ELLEGARD AND CHARLIE DODD

General

- Not enough advertising. Ford does the best job.
- Option reduction would be good. We really don't need all of the current possible combinations. Strongly support reduced number of build conditions, i.e., Ford's "Rapid Spec".

Power Train

- Dodge's most glaring deficiency is engine availability (size).
- The customer doesn't differentiate between EFI and Carb so long as he gets performance and driveability.
- We need a 4-speed automatic O.D. transmission. It is a strong selling feature on Ford and Chevy.

Pickup - Full-Size

- Full-size pickup buyers have a definite purpose in mind which requires that size vehicle.
- Chrysler has to create some dealer traffic.
- Dodge needs modern styling. Truck buyers are ready for "aero" styling.
- There is room for innovation in this market segment.
- Behind seat storage would be a plus feature.

Van/Wagon

- Dodge quality is not an issue.
- B-Model prices are out of sight, particularly on van conversions.
- You can carry over the current full-size van/wagon for a lot of years if you drop the price.
- We will never be in the volume van business again unless we can make it so the customer can afford it.

Sport Utility

- The small sport utility market is really hot. Women love them.
- A new sport utility needs 4 doors (3 doors would be okay).
- The Dakota is the right size base for a new sport utility.
- Priority: Dakota sport utility first, Dakota pickup second.
- A 4WD Caravan would sell.

TAB 13

INDIVIDUAL ZONE VISIT REPORT:

CINCINNATI

Inter Company Correspondence

	Telephone	Date
	40A TAS.55	March 25, 1986

To — Name & Department			CIMS Number
R. O. Eccles	Chief, Advance Planning	Chrysler Center	415-03-10

From — Name & Department			CIMS Number
T. deBoer	Truck Technical Operations		414-05-46
E. J. Perkins	Manufacturing Feasibility	Chrysler	413-04-42
T. A. Skemp	Advance Power Train Programs	Center	415-03-10

Subject: **DEALER VISITS - CINCINNATI ZONE**

The following dealers in the Cincinnati Zone were visited by the undersigned:

- o COMMONWEALTH DODGE - Louisville, KY
  (Chris Engle - General Manager)
  (Don Bauchillon - Part Owner)
  (Bill Taylor - Truck Sales)

  This is a suburban dealership primarily serving the personal use truck market with a concentration on the van conversion market. Owners also have Ford dealership in Louisville and Nashville.

- o ROYAL DODGE - Louisville, KY
  (Dave Pegram - General Manager)
  (Kevin Collins - Part Owner)
  (Bill Bore - Truck Sales Manager, Ford Store)

  A suburban location in the most affluent area of Louisville selling mostly trucks for personal use. Owners also have two Ford, a Buick and Volkswagen dealership, all in Louisville.

- o TRADER BUD'S WEST SIDE DODGE - Columbus, OH
  (Jeff Hawkins - Sales Manager)
  (Bob Boyd - Truck Sales)
  (Dave Hager - Truck Sales)

  A suburban dealership in a working class area but with some rural and farming business. Primary sales volume is for personal use but includes some farm and commercial trucks along with trailer towing use.

- o JOE KIDD DODGE - Cincinnati, OH
  (Dave Wright - General Manager)

  A suburban and rural dealership. Truck sales are mostly pick-up in a market mix of farm, commercial and personal use.

The attached listing encompasses comments received from each dealership and is broadly divided into power train, standard pick-up, standard van/wagon and sport utility.

T. deBoer

E. J. Perkins

T. A. Skemp

/cst
Attachment(s)

cc: E. S. Clark
P. J. Keegan
J. M. McHugh (Cincinnati Zone)
K. J. Price
G. L. Rinschler
P. V. Sheridan

84-110-7878

CINCINNATI ZONE - DEALER VISIT COMMENTS

COMMONWEATH DODGE

Power Train:

- o Dodge 6-cylinder is too small, need to be bigger, around 300 CID.
- o 318 engine is okay and so is 360.
- o No need for big gas in this market except for trailer tow.
- o No diesel market, GM has killed diesel reputation.
- o Need EFI, but TBI vs. MPI is no issue.
- o Lack of 4-speed automatic transmission is no big problem, can sell around it. Perceived fuel economy is equivalent.
- o Manual 4-speed O.D. is hard to shift; NP 435 is okay; customers are happy. Manual 5-speed would be a good selling feature.

Full-size Pick-up Chassis:

- o Ride and handling are good. No need to change chassis.
- o Quality has improved in recent years.
- o 4 x 4 solid axle is preferred over IFS.
- o 4 x 4 sales are not a big factor in this dealership.

Full-size Pick-up:

- o Need new appearance, more modern, Ford like.
- o Adding 6" to cab may be a good feature.
- o More women are buying pick-ups now than ever before.
- o Raising 'H' point may be a problem for ingress and egress especially for women.
- o Current grille looks like GMC which is a slow seller; Chrysler should emulate Ford, not GM.

CINCINNATI ZONE - DEALER VISIT COMMENTS

COMMONWEATH DODGE

Full-size Van/Wagon:

- Engine cover intrusion is a problem especially on the passenger side.
- Dodge is considered the best V/W on the market.
- Sliding door is a problem; swing doors are preferred.
- Having a frame is of no consequence.
- Exterior appearance is okay.
- Conversion business is very important, price range approximately $15,000 - retail.
- NOTE: T115 V/W should have a 5-speed manual with optional V-6.

Sport Utility:

- Prefer both large and small availability.
- If forced down to one choice, prefer full-size because of familiarity and trailer tow.
- 2WD loses resale value very fast.
- Convertability (top removal, etc.) is of no interest.
- Must have 2-door to be competitive; however, 4-door may be okay.
- T115 4WD is probably a good feature (like Vista) but will not replace sport utility.
- NOTE: Most intense current problems for all Chrysler vehicles:
  - Carburation complaints
  - Air and water leaks.

  Also, order process and paperwork is difficult and prone to errors. The Ford rapid specification system is superior.

CINCINNATI ZONE - DEALER VISIT COMMENTS

ROYAL DODGE

In general Dodge has a good acceptance level.

Power Train:

- o Dodge V-8 is adequate, gas mileage is not important but power is.
- o Dodge needs more optional axle ratios and in general, more versatility in power train offerings.
- o Large gas engine is a very small segment.
- o For Ford - 300 CID 6-cylinder and 302 V-8 are main part of the market.
- o 302 with 4-speed automatic is a personal use vehicle whereas, the 302 with 3-speed automatic is more of a work truck.
- o Need a larger 6-cylinder, at least 300 CID.
- o Ford 302 EFI in van is a very important offering.
- o EFI vehicle must feel good, whether TBI or MPI.
- o Diesel is not a priority item in this market.
- o Manual transmission shift quality is not a major issue.

Pick-up:

- o Current chassis is okay for ride and handling.
- o Retain solid 4 x 4 front axle.
- o Need new sheet metal, not unlike Dakota.
- o Contemporary appearance is needed but don't lose macho look.
- o Adding 6.0" to cab is of no value. Pick-up trucks in this market tend to be third vehicles.
- o Raising 'H' point is not needed will reduce ease of ingress and egress.
- o 60/40 seat is a good idea.

CINCINNATI ZONE - DEALER VISIT COMMENTS

ROYAL DODGE

Full-size Van/Wagon:

- Current van is well accepted better than GM.
- Eliminating engine dog house would improve passenger foot space and reduce heat.
- Wagon needs "premium" high line.
- Frame could be a good selling feature but is not important. Also Ford uses longer W/B as a selling point.
- Exterior appearance should also be changed, especially the front end but make it different than GM or Ford.
- Few short W/B models are sold in this market.

Sport Utility:

- Small sport utility is a new 'nitche' for personal use. typical customers are professional people and women.
- Prefer to retain both large and small, but if only one, small is preferred.
- 2-door small utility is first preference over a 4-door.
- Some convertability would be a plus feature.
- T-115 4WD would not add volume and is not a sport utility type of vehicle.
- Dakota sport utility should have more room than S10 or Bronco II.
- Don't use a one piece liftgate.

General Comments

- Trucks should follow cars in appearance, features, electronics, etc.
- Ford rapid specification system is superior to Dodge.

CINCINNATI ZONE - DEALER VISIT COMMENTS

TRADER BUD'S WEST SIDE DODGE

Power Train:

- o Engine line up okay, but would like a large displacement gas engine.
- o Diesel with good reputation and high torque power output would also fill the need for more power.
- o No perceived difference between MPI and TBI.
- o Truck fuel economy is important. Need 5-speed manual and 4-speed automatic transmission.
- o Trucks are mostly family second vehicles.
- o V-6 engine will be an advantage.
- o Need more (deeper) axles ratios especially on vans for trailer towing.
- o Truck buyers tend to be more informed about the product. 95% of vehicles are sold from inventory at dealership. Orders are based upon historial track record.

Full-size Pick-up:

- o Chassis okay; no need for change, good ride and handling; perceived as better than competition.
- o Wide cab and roomy three man seating is appreciated by the customers.
- o Club cab and dual wheel pick-up are missed in the line up. These are merchandizing pieces attracting customers.
- o Ford is one ton competition, Chevrolet ½ ton and 3/4 ton, in their market.
- o On 4 x 4, don't change front suspension; stay with solid axle. It's a selling feature.
- o Adding 4" to 6" to the cab is a minor selling feature.
- o Split bench seat would be a major sales advantage.
- o Ford's major advantage is their in-depth offering.
- o Extended cab should have seating space of at least 18" or more.

CINCINNATI ZONE - DEALER VISIT COMMENTS

TRADER BUD'S WEST SIDE DODGE

Full-size Van/Wagon:

- o Need more passenger foot space; move engine forward.
- o Longer Ford W/B is not a disadvantage for Dodge.
- o Ride and stability is good.
- o Lack of separate frame is not a sales disadvantage.
- o Eliminate dead bolt door hardware.
- o Use 60/40 side swing doors for improved access.
- o Retain front door vent windows.
- o Side glass should pivot like T-115 for noise reduction and ventilation.
- o Low demand for sliding side doors, commercial only, but don't eliminate.
- o Overall appearance is good, front end could be made more contemporary, should have retained quad headlights.
- o Would like to have quad buckets and fold out rear bench seat. Good seller versus van conversions.
- o No crossover from B-109 to Caravan.
- o Retain drip rails.

Sport Utility:

- o Like current Ramcharger, but need Dakota sport utility.
- o If only one, prefer small sport utility; higher volume.
- o Prefer 4-door small sport utility (or second door on passenger side only). No sliding door.
- o Convertibililty is a good feature, also R.R. seat should be quick removable.
- o One piece liftgate is okay but should have roll down window. Protect for roof racks (canoes, rafts, etc.).
- o Current sport utility vehicles are used a lot for trailer tow.
- o T-115 4WD is not a sport utility; FWD provides adequate traction.
- o Consider side hinged R.R. door.

CINCINNATI ZONE - DEALER VISIT COMMENTS

TRADER BUD'S WEST SIDE DODGE

General Comments

- o Quality of our vehicles is competitive.
- o On T-111 van, water freezes at lower forward edge of door opening, causing deformation of door front edge.

JOE KIDD DODGE

Power Train:

- o Current 225 6-cylinder is okay, but V-6 would be desirable.
- o 318 and 360 adequate for this market and can cover most T.T. applications.
- o Automatic transmission has good reputation, no sales loss due to lack of 4-speed.
- o 833 transmission is hard to shift; 5-speed manual not required.
- o Offering of current axle ratios is okay.
- o No interest in diesel; bad GM stigma.
- o EFI - need in future products to improve driveability. TBI vs. MPI is of no consequence.
- o Should improve manual shift lever location, throw, and effort. Must be able to shift well.

Pick-up:

- o Quality has improved significantly during last few years.
- o Chassis is very good from a ride and handling standpoint.
- o Truck appearance is old fashioned; need new appearance.
- o Aero look is probably okay, but should have macho look.
- o Customers expect new things from the New Chrysler Corporation.
- o Adding + 5" to 6" to cab will not do much; need club cab with forward seating.
- o A higher 'H' point would probably be a problem.
- o 60/40 seat is a good idea, customer oriented feature.
- o IFS on 4 x 4 is better than solid axle, but not twin I beam type, difficult to align.

CINCINNATI ZONE - DEALER VISIT COMMENTS

JOE KIDD DODGE

Full-size Van/Wagon:

- o Van/Wagon has good appearance, current package formula is good.
- o Longer W/B (Ford) is no advantage.
- o Frame construction is not an advantage.
- o Dual doors are best for both side and rear doors; no interest in 60/40 side door.
- o Full corrosion protection is important.
- o Can delete drip rail; appearance is more important.
- o Very little T-115 crossover consideration.
- o No need for four bucket seats but probably a good feature on the T-115.

Sport Utility:

- o 2WD for T.T. is a good seller.
- o If only one, small preferred over large.
- o Prefer 2-door over 4-door small sport utility.
- o T-115 - 4WD - no interest. FWD provides adequate traction and is a strong salespoint.

General Comments

- o Small utility van may be a new potential 'nitche'.
- o Trucks are complicated to order, system should be simplified to reduce potential errors.

TAB 14

INDIVIDUAL ZONE VISIT REPORT:

NEW YORK

Inter Company Correspondence

To — Name & Department		Telephone	Date	CIMS Number
P. V. Sheridan	Advance Product Development	T7/JER.10	April 28, 1986 Chrysler Center	415-03-10

From — Name & Department			CIMS Number
A. C. LaCroix	Vehicle Packaging & M.D.	Chrysler	413-06-32
J. E. Reece	Advance Product Development	Center	415-03-10

Subject: **DEALER VISITS - NEW YORK ZONE**

The following dealers in the New York zone were visited by the undersigned:

Warnock/Ryan Dodge, Livingston, NJ
Dodgeland (Autoland), Springfield, NJ
Meadowland C/P Dodge, Carmel NY
Scarsdale Dodge, Scarsdale, NY

The attached comments were received from the above Dealerships (Stores) and are categorized into power train, standard pickup, standard van/wagon and sport utility. Each dealer supports a somewhat different market segment which accounts for their separate sales techniques and perceptions of what Dodge Truck could do to improve their product. A single page summary precedes the detailed dealer notes.

WARNOCK/RYAN DODGE (Tim Ryan)

Largest sales of Dodge trucks (including fleet), located in an affluent region. Primarily contractor oriented with the majority of his sales going into fleet usage. Very high product knowledge (trucks) and knows his competitions spec's as well. Warnock owns a manufacturing facility producing dump bodies, stake beds and high cube boxes. We were joined by dealership representation from Ford, Chrysler Plymouth, service and the holding company.

DODGELAND (AUTOLAND) (Michael T. Colatrella)

Number 2 seller of Dodge trucks (including fleet) in the N.Y. region. Sales oriented "store" where product content knowledge is secondary to moving their stock. Primarily deals with blue collar customers who shop price. We were joined by Ford general manager.

MEADOWLAND C/P DODGE (William Volz)

Semi-rural community setting. Provides a relaxed atmosphere for selling. Their truck sales cross varied customer needs. Knowledge of truck specifications and service play an important part in sales. We were joined by dealership representatives from Ford and service.

SCARSDALE DODGE (Thomas Byrnes)

A metropolitan dealer whose customers aggressively shop price. Truck service accounts for major part of their repeat sales. Truck sales cover all lines from standard pickup, B350 vans, dump and stake beds, etc. This dealership is part of a nationwide holding company with multi-brand franchises.

A. C. LaCroix

J. E. Reece, Jr.

mas

cc: E. S. Clark
T. DeBoer
R. O. Eccles
P. J. Keegan
J. R. Love
G. E. McCarron
J. L. Worley
T. Byrnes - Scarsdale Dodge
D. Genova - Zone Truck Specialist
M. Jacobs - Zone Manager
D. Toresco - Dodgeland
W. Volz - Meadowland C/P Dodge
T. Ryan - Warnock/Ryan Dodge

SUMMARY OF TRUCK DEALER VISITS - NEW YORK ZONE
(4/2-3/86)

Attached are detailed notes from each visit.

Summarized below are the major points observed during this visit.

1. The formula for successful truck sales includes:
   - Units on display to passing motorists
   - Units in stock for immediate delivery
   - Knowledgeable truck sales personnel

2. Dodge trucks sell on price. In order to be competitive, we must upgrade GVW's, interiors, and power trains. GVW's fail to haul stated loads and power trains fail to move loaded units.

3. The factory should offer, and amply advertise, a wagon camper unit. Expand the current travel package to include: Bed, table, refrigerator, individual lights, individual A/C outlets, individual/headphones, tasteful exterior, etc. The factory units offer a higher quality finish and better warranty than van converters plus available financing.

4. Definitely need small and large diesel engines for pickups and van/wagons to satisfy commercial uses and some personal usage. Need durable 4 speed automatic transmission for light duty and heavy duty applications.

5. Need durable 5 speed manual transmissions for light duty and heavy duty usage.

6. Chrysler is in a unique position of having the market ready to accept another unique and innovative product (like T115) to expand its customer base. It is difficult to get truckers to change brands (especially Ford owners).

7. Customers want and will pay for more safety (perceived or real): ABS, dual rear view mirrors, high mounted stop lamps, side guard beams, head restraints, restraint systems, etc.

8. Revamp current catalogs, order code guides and invoicing to reflect packages and applicable content such as:
   - Better descriptions for prospector 1, 2 and 3
   - Trailer tow capacity packages: 2, 4, 6, 8, 10, and 12,000 lbs.
   - Pay load packages: 2,4,6,8,10, and 12,000 lbs.

9. Need to develop D-450 and B-450? entries. Offering dump trucks, stake beds, high cube vans, vehicle retrievers, etc. Lends more credibility to Dodge Truck offerings D-50 through D-450.

10. Plant downtimes must be more carefully planned and properly communicated to dealers to insure Dodge trucks sales momentum. When dealers tell customers that Dodge is out of trucks they proceed to buy Chevrolet and Ford and it takes years to regain the truck customer base.

11. The Full-Size Truck Renewal must include:
   - Trucky appearance
   - Car like interiors
   - 4WD
   - Ample power trains
   - Ample pay loads

12. N-derivatives should include:
   - Sport utility with three or four doors
   - Extended cab

13. Pickups with manual transmissions are replacing "G" and "H"-Body turbos for drivers required to pay excessive insurance premiums ($2,500 - $3,000 per year).

ADVANCE PLANNING
REV. 04/28/86 T7/DVS3

NEW YORK ZONE - DEALER VISIT COMMENTS

WARNOCK/RYAN DODGE

General:
- o Warnock/Ryan sells two trucks for every passenger car
- o Dodge perceived as light duty
- o Dodge needs to "get tough" and emphasize durability (See Power Train list)
- o Two basic truck markets (1) stripped work trucks, (2) "Loaded" work/personal transportation
- o Dakota will eliminate D100 and D150
- o Need to give clearer picture of truck capabilities in specification write up (Correlate GVW with payload)
- o B250, 8 passenger wagon travel package - Chrysler's best kept secret
- o Anti-corrosion capability good sales tool

Power Train:
- o Dodge should drop 6 cylinder engine
- o 360 automatic not strong enough/inadequate torque
- o Need 15,000-17,000 GVW (D450), nothing in the market
- o Need big diesel (Ford 6.9 international) "Name Brand" to provide: Trailer towing, etc.
- o Axle ratios and axle noise highest concern items in 250 series and up
- o 6 cylinder automatic used for pricing advantage
- o Need "name" in transmissions (Ford - Warner T119), i.e., "Borg Warner" H.D.
- o Need name in electronics, i.e., "Bosch" for ignition
- o Need 4 or 5 speed manual transmission with overdrive (A833 Dodge excellent)
- o Fuel injection considered "Hype", multi-point system preferred - truckers know the difference
- o Go back to 11" torque converter (10½" inadequate)
- o Max springs for B350 not up to spec (not as good as 1981 model)
- o Full-size van brakes inadequate - Max GVW models fail at 5,000 miles
- o W350 steering gear mounting fails in less than 500 miles (nuts fall off)
- o Need greater radiator capacity (Ford is 2 Times the size of Dodge)
- o Do away with "Lock up converter" on heavy duty models
- o Prop shaft drone caused by weak transmission mounting
- o Ram track (4WD) cannot shift at low speeds
- o Axle wind up causes "clink" on Ram Charger
- o Need standard features (Ford ABS for 1987)
- o Dodge 4 speed automatic - good, no service problems

Pickups - Full-Size:
- o Dodge leads sales with Road Ready "Snow Commander"
- o Needs fancier interiors (ford XLT Lariat)
- o See a trend towards extended cab by youth market
- o 5/50 excellent sales tool (twice the galvanizing that Ford uses)
- o Need new steering wheel
- o Need upgraded: instrument panel, trim and seats
- o Shift lever location (manual, floor) needs attention
- o Aerodynamic shape not perceived as truck image
- o Need exterior dress up, i.e., road wheels, moldings, graphics, etc.
- o Need standard rear bumper
- o Need to bring truck up to advertised ratings (too light, fall short of expectations)
- o Need GVW ratings that truly suggest the actual payload capacity
- o Dodge catching up with customer loyalty - need to wait another year to confirm
- o Need electronic cluster (Ford available in 1987)
- o Trucks should be "Macho" in appearance
- o Road Ready Packages account for 30% of total truck sales
- o Dodge needs greater engine options, i.e., H.D. Diesel, bigger gas engine, etc.
- o W350 is good value
- o Price jumps are too big between trim levels
- o Truck drivers perceive their personal truck as capable of giving them an image
- o Need to increase frame stiffness in heavy duty utility models

Van/Wagon:
- o B350 is excellent product for money
- o Full-size wagon sales are slowing (Dodge and Ford)
- o Best kept secret is Dodge full-size van (i.e., 127" 8 passenger travel package)
- o Extended (mini/compact) T115 good idea (extra luggage space)
- o 4WD Caravan (as sport utility) not seen as competitive with Bronco II image
- o Full-size wagon sales diluted by T115
- o T115 needs "glass all around" van
- o 4WD T115 would need additional ground clearance if going head-to-head with Bronco II

Sport Utility/Ram Charger:
- o Sport Utility has 15% (13% actual) of total truck sales
- o Dakota needs sport utility to go head-to-head with Eddie Bauer and Bronco II
- o Sport Utility should have 3 (sliding rear) or 4 doors to compete with Jeep and have a "leg up" on Bronco and S-10
- o Sport Utility perceived as an "Image Vehicle" and should have all the "toys".

Miscellaneous:
- o Carefully consider plant closings to insure continuous supply of trucks
- o Ford buyers are most loyal - hard to make switch brands
- o Three factors for truck sales: product display, in-stock vehicles, product knowledge
- o Need full line of trucks: D50-D450 with bodies
- o Would not see the Caravan 4WD as competitive with Bronco and Blazer
- o New combined truck/Van should "sit" higher and be more truck like in appearance (Ford 150 'H' point 2" higher than Dodge 150)
- o All trucks need higher level of trim and special features, i.e., dressier trim, electronic clusters, anti-lock brake system, etc.
- o Dodge advertisement needs to be more contemporary (dropping a pickup not seen as indicative of being strong) and in tune with buying cycles
- o Increase D150 capacity to ¾ ton and go head-to-head with Ford F150, i.e., do not reduce spec's to keep price down

DODGELAND

General:
- o Dodge name suggests truck to customers
- o 5/50 good selling feature
- o Caravan hottest item in show room
- o Need to upgrade specifications on pickup and van
- o Dodge price leader
- o 9.9% financing not enough incentive
- o Customer will buy safety: ABS, air bags, high mounted stop lamp, etc.
- o Need greater towing capacity on pickup
- o Need better descriptions for prospector I, II and III packages
- o Stretched Caravan will dilute B250 wagon sales
- o Need upgraded interiors
- o B250, 8 passenger travel package - Chrysler's best kept secret

Power Train:
- o 318 Cu. in. engine best in the world
- o Big diesel not required
- o Need 4 speed automatic overdrive transmission
- o Need larger engine
- o See need for 4WD Caravan

Full-Size Pickup:
- o No demand for extended cab (full-size pickup)
- o Future models should look outside U.S. for trends in truck style (European or Hi-tech image)
- o Combined truck/van good idea if there is an increase in capacity
- o Need features, i.e. lockable storage outside cab
- o Make more special features standard, i.e., reduce options
- o Improve safety features like passenger car
- o Dual outside rear view mirrors should be standard
- o Seating package should accommodate larger driver
- o Utiline still asked for
- o Need better dress-up (Ford XLT Lariat) - Prospector I, II, III not enough (i.e., competition getting stiffer)
- o Need bigger GVW
- o Pickup needs freshening now
- o Any style change should retain a strong, durable (Macho) trucker image not "sleek" and "lean"

Van/Wagon:
- o Want a Caravan without glass behind "B" post
- o All full-size vans and wagons need: 1) Higher GVW rating; 2) Higher trailer towing capacity; 3) Larger fuel tanks (conversions); 4) Larger engine -gas
- o 127" WB, 8 passenger, travel package is the best kept secret in Chrysler - good alternative to van conversions
- o T115 needs more than 48" between rear wheelhouses
- o All vans need more "plain" non metallic colors such as (blue, white, stop sign red) for fleet use to hold signs
- o Full-size van should bring back hi-cube
- o Full-size wagon needs to be reskinned, but keep the interior unchanged
- o Caravan travel bed does not work (no place for luggage with seat folded)

Sport Utility/Ram Charger:
- o Want Dakota sport utility (2 door) to compete with Bronco and Blazer
- o Extended cab not needed
- o If extended cab is offered, emphasize styling appearance
- o Need larger opening at rear on full-size van
- o Mini Ram Van - largest seller - needs 6 cylinder engine
- o Ram Charger vs. Eddie Bauer does not compete will - too big
- o Need hi-visibility D50 Ram (very popular and perceived as a domestic product)

Miscellaneous:
- o Dodge trucks have (since 1984) started to be accepted as a "good truck"
- o Vans (full-size) need to improve overall image; harsh ride, tinny, etc.
- o Surplus gasoline has spiked full-size wagon sales
- o Need pickup with removable cap and rear seats
- o Need 4 X 8 flat cargo area for fragile building materials
- o Looking at a plastic and canvas rear cover and removable rear canvas seats - Note: Additional information available from Jim Reece.

MEADOWLAND

General:
- o Dodge considered a light duty truck
- o Prospector series nice, but not enough
- o Need a 4WD Voyager
- o Dodge price leader
- o National advertising does not adequately describe capability
- o Extended Caravan good idea
- o 6 cylinder Dakota good idea with 4WD
- o Diesel on light duty trucks is dead issue
- o Customers are buying safety: size, head restraints, side guard beams, roll bars, crash test compressions
- o Need reskin on D150, NOW
- o Customers want "trucky" looks with passenger car rides
- o Customers think Ford trucks are tougher than Dodge
- o Composite pickup box good idea
- o New trucks should have greater GVW
- o Anti-corrosion capability good sales tool

Power Train:
- o Dodge D150 has best ride
- o 360 Cu. in. not big enough
- o Name brand diesel (Cummins) needed (Ford 6.9 international)
- o Dodge must have higher GVW
- o Big gas engine preferred over diesel in P/U's - 440 would be good image
- o Well-known diesel engine would be good (mentioned Cummins)
- o Cannot handle "dump" truck loads (take out of Road Ready package)
- o Caravan (extended) is seen as a toughness problem
- o 4WD Voyager not needed - already a good handling vehicle
- o Dakota should have: 1) 2.5L 5 speed transmission; 2) 3.9L V6 cylinder
- o Multi-point-injection should be used - no need for throttle body injection - TBI not considered "real fuel injection"
- o 2.5L engine better than 2.6L
- o Rusty springs and steering columns detract from quality appearance
- o Need greater trailer towing capacity
- o Need greater durability
- o Adjust current ratings to reflect "real" performance capabilities
- o MMC turbo diesel was good engine
- o Need 4 speed automatic with overdrive in both light duty and heavy duty to improve economy in vans and pickups
- o Need 5 speed manual transmission
- o 4WD is slightly better than front wheel drive for handling
- o Need fuel injection to improve starting

Pickups (Full-Size):
- o Customer wants tough "Macho" looking truck
- o Need unique vehicles ("Little Red Express") - spring special very good
- o 5/50 good sales tool
- o Dakota will attract youthful buyer - needs all the toys
- o Composite box is good idea
- o Need chrome step bumper (very important)
- o Need color keyed service components, i.e., brake fluid container, etc. (Ford XLT Lariat)

Van/Wagon:
- o 127" wheelbase, 8 passenger, travel package is Chrysler's best kept secret
- o Need better color selection
- o Dodge vans seen as our "real" trucks
- o Combined Van/Pickup needs command of the road driver seating
- o Aerodynamics O.K. - don't lose the brute strength look
- o Chrysler's better than GM and imports for: 1) paint - best and easily refurbished; 2) trim - best and easily refurbished
- o Voyager travel bed "poor package" - no storage with bed in use
- o Need T111 type travel package for T115 (bed and table)

Sport Utility/Ram Charger
- o Customers see D50 Ram as domestic built
- o See sport utility as over 15% of truck market
- o Perceives Dakota as a "Niche" vehicle between D50 and D150
- o Dakota will replace D100
- o See Dakota as an alternative to Lazer for "youth" market - "G" Body turbo insurance premiums are $2500-$3000 per year
- o 4WD Colt Vista is NOT competitive with Bronco II as an image car
- o Voyager and Bronco II are YUPPIE image
- o Need Dakota extended cab
- o Perceive sport utility as fairly short lived
- o No market for removable "cap" on Ram charger
- o 4WD Voyager with V-6 "may" compete with Bronco II as image vehicle
- o Need 4WD Dakota
- o Dakota sport utility need 2 and 4 (3) doors to compete with "Jeep" and Bronco II
- o Need hi-line trim (exterior and interior) for personal use trucks

Miscellaneous:
- o Need to improve Dodge truck national advertising
- o Public safety conscious - Dodge should emphasize
- o Specials: "Little Red Wagon", spring specials all help attract customers because personal use buyers need "good image"
- o Dodge needs to recognize that truck customers know their vehicle and buy with clear expectations i.e., performance, durability, etc.
- o "Thanks America" campaign is not attracting customers
- o Need carpet in base trucks and vans
- o Manual shift lever (pickups) has excessive throw - See Ford
- o Mini step would be acceptable in new "combined pickup/van" concept
- o Aero styling: 1) Personal use customers would like; 2) Commercial customers want emphasis on functional, brute strength
- o Chrysler Corporation has best finish, both exterior and interior
- o Dodge trucks need special features, i.e., chrome step bumpers, clear plastic fluid receptacles, color keyed caps, all accessories in reach of driver, more trim codes (like Ford: XLT, Eddie Bauer, Lariat, etc.) and passenger car type instrument panel

SCARSDALE

General:
- o Full-size Sportsman wagon needs reskin - keep interior as is - possible new instrument panel
- o B250, 8 passenger, travel package is Chrysler's best kept secret
- o Need hi-cube van for walk thru
- o 5/50 warranty is excellent sales tool

Power Train:
- o Need "real" diesel for B350 vans (work truck) - would be good for pickup as well
- o 360 cu. in. engine lacks power and gives poor mileage
- o 440 engine not a viable alternative
- o Need to upgrade 360 CID engine, only good for light duty truck
- o Need 5 speed manual transmission with overdrive
- o Need heavy duty 4 speed automatic with overdrive
- o Need "Name Brand" big diesel for B350 vans and D350 pickups, i.e., Detroit Diesel, International, etc.
- o Need higher GVW to compliment the dump, stake, car retrievers, snow commander requirements, i.e., B450 and D450
- o Dodge has best transmissions

Full-Size Pickup:
- o Need medium truck capacity (real) - not a nameplate
- o Road ready package are too slow in delivery after order
- o New Aero-look not acceptable; should have a "trucky" appearance
- o Composite box is a good idea
- o No bolt thru on box - good sales tool for anti corrosion
- o Next generation of pickups should have: 1) truck (Macho) exterior; 2) High tech instrument panel and driver controls; 3) No electronics; 4) Passenger car interior (personal use; 5) Passenger car seats
- o Hi-cube pickup not competitive with hi-cube van
- o Scarsdale buys "Creegar Pikipsee" dump box instead of Road Ready due to delivery problem from Chrysler
- o Stake body pickup another "best kept secret" by Chrysler
- o Need new instrument panel (more passenger car appearance)

Van/Wagon:
- o Need factory installed (warranted) options: 1) Camping oriented accessories; 2) Rear bucket seats 2 X 2 X 2 seats - with eating trays; 3) Refrigerator; 4) Overhead individual lighting; 5) Overhead air conditioning
- o B350 van (9,000 GVW) makes up the vast majority of full-size van/wagon sales
- o Need new exterior appearance
- o B350 engine location is good
- o B250 Sportsman good value/good price
- o B350 is a jobber's truck
- o Need Hi-cube van in order to have pass thru from cab with flush floor
- o Van needs new instrument panel
- o Need to improve B350 ride
- o Some areas of New York require heavy duty protection on front and rear corners (drive by Braille technique)
- o Full-size wagons are "tough sell" vehicles without more travel features
- o 50% of full-size vans are purchased sight unseen and/or fleet use oriented

Sport Utility:
- o 4WD, small V8, Ramcharger is needed
- o Need small Sport Utility (3 door) with sliding rear door to go head-to-head with "Jeep" and Bronco II
- o 4WD Caravan could not compete with Bronco II image (Caravan is a family car)
- o D50 Ram sell-out item, could use extended version
- o 4WD Sport Utility is hottest item in area because: 1) 2nd car with prestige; 2) Macho image; 3) YUPPIE image
- o Ram Charger is sold with all the "toys"
- o Sport Utility would be first product to leave market in "bad" times

Miscellaneous
- o Dodge has good truck name in New York Zone
- o Truck buyers do not quibble, know trucks and order what they want
- o Need to increase GVW on vans and pickups

TAB 15

INDIVIDUAL ZONE VISIT REPORT:

HOUSTON

Inter Company Correspondence

To — Name & Department		Telephone	Date	CIMS Number
		T8/HDT	April 8, 1986	
P. V. Sheridan	Advance Product Development		Chrysler Center	415-03-10
From — Name & Department				**CIMS Number**
R. O. Eccles	Chief Advance Product Development		Chrysler Center	415-03-10

Subject:

HOUSTON DEALER TRIP 4/7/86

GILLMAN DODGE

Other franchises Mitsubishi (2 stores) Pontiac, GMC, Honda, Suzuki.

o Gillman franchises 5% of all cars sold in Houston.

o Dodge franchise is only about one year old.

o Met with Ramsey and Barton Gillman, sons of founder who is still active. In addition talked to Dan Harris - GMC truck sales manager (currently moving 30/35 single unit trucks per month - almost no fleet sales). All very knowledgeable product people. Total hands on operation one brother always there.

o Separated car and truck service for Pontiac/GMC.

Dodge Strengths

- No mechanical problems
- Image is improving - people who previously would not consider Dodge will now - attributable to advertising and LAI image.
- Warranty

Dodge Weaknesses

- Low resale value
- Few outlets (19 Ford, 22 Chevrolet, 5 Dodge)

Full Size Pickup

General consideration - majority of sales are for personal use. Must be upscale, almost customized vehicles. Durability assumed. Pickups perfectly acceptable for all uses from commercial to attending the opera. Dramatic color schemes required. Dodge considered "plain old piece". Women account for 50% of sales decisions.

- Power train engine/transmission lineup adequate. Absolutely no interest in diesel (GM has destroyed the market). Four speed automatic not required - didn't like Ford because of hunting. Fuel injection important but no perceived difference between EFI and MPI. (High sulphur fuel a problem with MPI). Four wheel drive not required - 90% of Ramchargers 2 wheel drive.

- Chassis: only complaint is ride quality versus GM. Needs improvement. Ford Twin I beam no good.

- Design - Aero is important and perceived as wave of the future. Need good two tone metallic paint and nicer wheels. Quad headlights preferred. Styling very important for personal trucks - needs pizazz. Must have passenger car levels of interior comfort. Conventional Renewal adequate.

- Option simplification/packaging is acceptable if it helps quality.

Full Size Van/Wagon

General consideration - Dodge is the leader. Good product with more sizes and derivatives. No specific problem. Reskin could suffice. Sell more than 90% 127" wheel base.

- Power train - same as pickup
- Chassis - no problems
- Design - new Suburban has seats that fold flat to form load floor. Could apply to van/wagon
- Suburbans sell very well in Texas (10/15 month at Gillman.)

Sport Utility

General considerations - If you only could have one, would pick medium (Dakota) size. Four doors a must and similarity to Suburban is an advantage. Extended cab has higher priority due to volume. Removable cap not a big deal (not an important selling point).

Extended cab - first Dakota priority, space used to carry gear, not people! Needed to expand truck line and become more of a full line truck seller. 30% of pickup sales would be extended cab. Ford full size extended cab a good seller - style and utility.

General - Chrysler quality improving but significantly behind Japanese. Dodge/GMC/Pontiac service almost equally split in $ volume between "warranty" and "customer pay" Honda "warranty" insignificant.

Looking for a Chrysler umbrella philosophy/strategy come up with responsive. We already had a reputation in this direction. Slogan "Responsive to America's Driving Needs".

MAC HAIK DODGE

Other franchises Chevrolet and Ford.

Talked to Dom Torres GM, Jerry Smith fleet sales manager and Bobby Heatherwood Chevrolet sales manager - not very truck product knowledgeable.

Lowest producer of Houston's 5 Dodge dealerships - very low key but extensive inventory.

ADVANCE PLANNING
04/08/86 T8/HDT1

Chrysler Strengths

LAI reputation and durability. (Okay mechanically except driveability).

Dodge Weaknesses

Much weaker image than Chrysler. Fit and Finish not up to par. Old design (exterior color see thru from interior). Low resale value related to lack of strong image.

Full Size Pickup

- Needs 4 speed automatic but Ford unit poor - not strong point. Diesel okay for ¾ and one-ton
- Composite box would alienate some buyers although composite interior is good
- Running boards, if optional, should be easy to remove or add at dealer - not a big deal
- Need fuel injection (either MPI or TBI no discrimination) need responsive, reliable performance
- Aero look will be good
- Definitely need more dramatic color schemes

Van/Wagons

- Texans go for custom conversions
- Astro is hurting GM van sales
- Need to improve ride
- Reduced engine intrusion a plus
- NVH improvements required
- Outstanding interior could cut into conversion sales if significantly cheaper?

Other

- Dakota S/U more important than extended cab
- Four doors essential
- Extended cab space used for storage, dimensions relatively unimportant
- Four wheel drive T115 - total lack of interest - no 4WD market in S. E. Texas

R. E. Burnham

R. O. Eccles

D. H. Olsen

cc: K. S. Mack
R. M. Sherwood
L. A. Turner

ADVANCE PLANNING
04/08/86 T8/HDT2

TAB 16

INDIVIDUAL ZONE VISIT REPORT:

DALLAS

Inter Company Correspondence

Telephone	Date
T5/LAT.4	April 25, 1986

To — Name & Department			CIMS Number
R. O. Eccles	Chief Advance Product Development	Chrysler Center	415-03-10

From — Name & Department			CIMS Number
J. M. Hossack	Advance Components Planning		414-01-47
K. J. Price	Truck Technical Operations	Chrysler	414-05-46
L. A. Turner	Advance Product Development	Center	415-03-10

Subject: **TRUCK DEALER VISITS - HOUSTON AND DALLAS ZONES**

The following truck dealers in the Houston and Dallas Zones were visited by the undersigned:

o **MIKE HALL DODGE - Houston, TX**

- Mike Hall - Dealer
- Bob Baker - Truck and Fleet Manager, Mort Hall Ford

o **GREENSPOINT DODGE - Houston, TX**

- Jack Apple - Dealer
- Mac McClanahan - Fleet Manager

o **PRESTON II CHRYSLER/DODGE - Richardson, TX**

- Monte White - Dealer
- Rob White - General Sales Manager
- Jim Jones - Dodge Truck Sales Manager
- Rick White - General Manager, White's Tyler Ford

o **IRBY CHRYSLER/DODGE - Dallas, TX**

- George Irby - Dealer
- George Stavros - Dodge Truck Sales Manager
- Jeff Kuntz - Truck Sales Manager, Simpson Chevrolet

The attached summary of the comments received is divided into the topics of power train, full-size pickup, full-size van/wagon and sport utility.

J. M. Hossack

K. J. Price

L. A. Turner

mas

ATTACHMENTS

cc: E. S. Clark
P. J. Keegan
P. V. Sheridan
E. W. Eskola (Houston Zone)
E. R. Kaplan (Houston Zone)
A. J. Salinas (Dallas Zone)

84-110-7878

HOUSTON ZONE - TRUCK DEALER VISIT COMMENTS

MIKE HALL DODGE - Monday; April 7, 1986

General

- o Showroom quality is not an issue. We need to correct the problems which occur at 3 years in service.
- o Commercial users want trucks which can work for 100,000 miles and still be worth something at trade-in time.
- o Chrysler starter noise does not convey a quality image.
- o Interiors are too "plasticy".
- o Don't eliminate vent wings.
- o Houston dealers do not like Ford "quick spec" packages. Need a base package plus options to tailor for local market.

Power Train

- o The number one priority to increase Dodge truck sales is to offer competitive power trains.
- o Engines are selling Ford trucks. The 302 MPI/A4OD is especially a winner.
- o The Ford 302 MPI engine outsells the 351 by a 5 to 1 margin in work trucks and has eliminated 351 sales in personal use trucks. Prior to the 302 getting MPI, the 351 was approximately 40% of 302/351 sales.
- o The 318 engine needs MPI - customers know the difference between MPI and TBI.
- o We need a 360 engine that "runs", especially on ¾ and 1-ton trucks. The 360 currently does not meet performance or fuel economy expectations.
- o The diesel/large gas mix on Ford pickups is 1 to 1 on 1-ton models and 3 to 1 on ¾-ton models.
- o We will need to have a dual rear wheel conventional pickup when the Cummins diesel becomes available along with good axle ratios.
- o A smaller diesel would have some appeal to van/wagon buyers.
- o A 4 speed automatic overdrive transmission is needed in both light and heavy duty configurations.
- o If the NPG435 transmission is replaced by a 5 speed, keep the "bull" gear.
- o Electric engagement of 4 wheel drive (similar to Ranger) is needed on full-size trucks.

Pickup - Full-Size

- o A 15% share is attainable with competitive product availability. Further share improvement would be a function of building a broader owner base plus improved advertising and merchandising.
- o The number one pickup priority in the Houston market is the reintroduction of a Club Cab.
- o The pickup mix at Mort Hall Ford is 35% Super Cab (of which 70% are XLT's with the rear seat). The free demand for Super Cabs is estimated to be 50% of total pickups.
- o Jump seats are better than a rear bench.
- o Many Super Cabs are sold in place of a full-size sport utility, partly due to price.
- o A 60/40 split bench seat is needed along with improved (more durable) construction on all seats.
- o Long term innovation - keep it like a pickup truck; don't make it "pretty" or controversial.

ADVANCE PLANNING
04/30/86 T5/LAT.5

- o Customers are spooky of electronic gauges/controls.
- o A "450" would provide increased sales potential.
- o The Dakota does not eliminate the need for a short wheelbase full-size pickup.
- o GM trade-in customers are the most unhappy with their pickups, particularly 305 engine performance and rust.

Van/Wagon

- o Frame vs. unibody - Ford sells the frame feature as a stronger towing platform.
- o The front chassis needs to be strengthened on Dodge, particularly for commercial usage.
- o The better walk through due to the forward engine location sells Fords.
- o Dodge does not have enough color combinations available compared to Ford.
- o A bench seat option would probably only sell at a 5% rate (commercial usage).
- o The single rear cargo door may not be needed.
- o Do not reduce floor to ceiling height.
- o Van conversions are running approximately 60% of total vans. Free demand for commercial sales is probably 60%.
- o A proposed factory replacement for many of the van conversion sales:
  - Wagon with 4 captain's chairs and a rear folding seat/bed
  - Good trim
  - Attractive price
  - Exteriors could be individualized as required by dealer installed tape/paint treatments

Sport Utility

- o Ford mix is 50/50 Bronco vs. Bronco II.
- o A 4-door Dakota sport utility would be a hit (3 doors might be an acceptable alternative).

GREENSPOINT DODGE - Monday; April 7, 1986

General

- o Quality is not an issue.
- o All Dodge trucks need suspension work.
- o Radios are poor - static reception.
- o Need better color/trim availability.
- o Vent wings are a desirable feature.

Power Train

- o We need larger, better performing engines and power train compatibility with our payload claims.
- o A name brand diesel is desirable.
- o A 5 speed transmission with a deep low plus overdrive and a 4 speed automatic overdrive transmission are needed.

Pickup - Full Size

- The Dodge sales mix is 15% business, 85% personal use. It is forced because of the lack of product to meet the needs of business users.
- The greatest product needs are a Club Cab and a dual rear wheel conventional model (higher priority than a Dakota Extended Cab for the Houston market).
- A "450" series may have some potential (Ford is reportedly going to offer one).
- Improve the seat back angle.
- We need air exhausters to improve door closing effort.
- Reduce wind noise.
- Target on Ford interiors.
- A 60/40 seat is a good idea.
- Maintain ride height to be competitive with current pickups.
- Buyers are ready for a more "aero" look.
- We need anti-lock brakes.

Van/Wagon

- Frame vs. unibody is not an issue.
- An extended front end would be O.K. (styling is a concern).
- Quad lamps look better than the new 1986 front end.
- Optimize storage capabilities.
- Make larger mirrors standard. A power option is a good idea.
- Rear A/C outlets should be located higher.
- We need plusher interiors.
- There is little interest in a front bench seat.
- Cargo doors - retain dual hinged rear doors if only one configuration is available. A T115 design sliding side door might be acceptable as the only side cargo door.
- Van conversion alternative - wagon with 4 captain's chairs and rear hide-a-bed from the factory.

Sport Utility

- Should be bigger than S-10 Blazer and Bronco II.
- Need improved rear seat entry. A 4 door (or possibly 3 door) Dakota derivative sounds about right.
- A removable rear bench seat is preferable to a folding seat like the current Ramcharger's.

DALLAS ZONE - TRUCK DEALER VISIT COMMENTS

PRESTON II CHRYSLER/DODGE - Tuesday; April 8, 1986

General

- o Color trim selection is not as good as Ford's.
- o Chevrolet has instituted a Texas Marketing Program patterned after Dodge's.
- o Vent wings (exhausters) are very important.

Power Train

- o We need a large gas and a diesel to compete with Ford.
- o Both light duty and heavy duty 4 speed automatic overdrive transmissions are required.

Pickup - Full Size

- o Improve ride and handling to Ford level.
- o Fix the high door closing effort.
- o Ford has better paint quality and less wind noise.
- o We need a Club Cab.
- o "Aero" styling is O.K., but maintain tough, durable construction. Front end sheetmetal must present a "tough" look.
- o Target interior is Ford. A 60/40 seat would be a great feature.

Van/Wagon

- o Body frame construction is not an issue.
- o We need a better ride.
- o Cargo door configurations - sliding side door (if T115 design); dual rear doors.
- o "Aero" will be important in the 1990's.
- o A new instrument panel is needed.
- o The current walk through height is required.
- o We could use a "factory" van conversion - a wagon with 4 captain's chairs plus a rear convert-a-bed.

Sport Utility

- o The current Ramcharger is not moving - early quality problems (Mexico) and too many 360 engines.
- o We need a Dakota sport utility.
- o The rear seat should be removable (T115) or fold flat (S-10 Blazer).

IRBY CHRYSLER/DODGE - Tuesday; April 8, 1986

General

- o Vent wing removal would be controversial.

Power Train

- o We need fuel injection (MPI for best performance/F.E.) and a 4 speed automatic overdrive transmission.
- o Full-size trucks could use electric engagement of 4 wheel drive (like Ranger).

Pickup - Full Size

- o The new pickup could be sleeker, more "aero".
- o A 60/40 seat would be great (use for price class upgrade).

Van/Wagon

- o A full frame is not an issue.
- o Upgrade the interior to Caravan level.
- o Do not reduce the floor to ceiling height - would significantly affect Dodge van conversion sales.
- o Use real gauges instead of idiot lights or electronic displays.
- o The single rear cargo door is expendable. A T115 type sliding side door would be O.K. for wagons, not for vans.
- o Less engine intrusion is desired.
- o T115 style; current B-model size would be ideal.
- o Avoid Aerostar appearance.
- o Maintain a high seating position (command of the road).
- o Customers want T115-like creature features.

TAB 17

INDIVIDUAL ZONE VISIT REPORT:

BOSTON

Inter Company Correspondence

	Telephone	Date
	T4/REB.3	April 21, 1986

To — Name & Department			CIMS Number
P. V. Sheridan	Advance Product Development	Chrysler Center	415-03-10

From — Name & Department			CIMS Number
R. E. Burnham	Advance Product Development	Chrysler	415-03-10
J. R. Thomson	Product Systems	Center	415-03-08
H. C. VonRusten	RWD Truck Program Management	Highland Park	418-04-18

Subject:

BOSTON TRUCK DEALER VISITS
April 15-16, 1986

Major findings:

- o Dodge Trucks require more national advertising and promotion.
- o Women are an increasing factor in truck sales:
  - Women are major influence at closing
  - Small pickup and sport utility buyers are estimated to be 30-40% young single women in Boston area
- o Large Sport Utility market dying.
- o Pickup behind-seat storage is needed.
- o Do not discourage female pickup buyers with elements such as higher floor.
- o Extended cab needed in Dakota line, also sport utility (should be 3 or 4 door, not counting rear hatch).
- o Poor quality, appearance, lack of "sizzle" make conquest sales more difficult, almost non-existant.
- o Option packages are desirable - sales from stock are 80-95% of total.
- o Toyota sends Corporate planners and engineers (with translators) to visit dealers on a regular basis (several times per year).

R. E. Burnham — J. R. Thomson — H. C. VonRusten

mas

cc: J. W. Callinan
E. S. Clark
D. E. Dawkins
R. O. Eccles
R. A. Horvath
J. M. Hossack
K. S. Mack

84-110-7878

COMMENTS

DEALER NAME	LOCATION & MARKET	APPROXIMATE ANNUAL VOL. CAR | TRUCK	CURRENT PRODUCTS	PICKUP RENEWAL	VAN/WAGON RENEWAL	SPORT UTIL. EXT. CAB	COMPONENTS	GENERAL
HARR DODGE (RICHARD WARREN, GM)	WORCESTER, MA AFFLUENT COMMUNITY	600 | 400 OTHER DEALS: TOYOTA, FORD, LINCOLN/MERCURY	o 5/50 STRONG SELLING POINT. o MAJOR QUALITY PROBLEMS - WATER LEAKS, TRANS., RUSTY CHASSIS COMPONENTS. o CURRENT VAN PAINT IS O.K. o SIMPLIFY ORDERING.	o STORAGE BEHIND SEAT DESIRABLE. MUST RETAIN PICKUP APPEARANCE. o MUST LOOK TOUGH. o DON'T RAISE PICKUP TO VAN HEIGHT.	o MINIMAL ENGINE LOVER AN ADVANTAGE. o DODGE VANS RATTLE. o NO INTEREST IN 4WD VANS.	o LARGE S/U NOT SELLING. o 4-DOOR IMPORTANT. o NEED BENCH SEAT.	o DIESEL NOT IMPORTANT- BIG GAS WOULD DRAW INTEREST. o CASSETTE RADIO NEEDED. o CLEARCOAT NOT IMPORT. o REMOTE & HEATED MIRRORS DESIRED.	o RUNNING BOARDS GOOD AS OPTION o PREFER LARGE GAS TANK.
SILVER CITY DODGE (JACK BARBOZA, PRESIDENT)	RAYNHAM, MA MIDDLE CLASS COMMUNITY	600 | 1200 OTHER DEALS: TOYOTA, FORD, HYUNDAI, CADILLAC, COACHMAN R.V.'S.	o NEEDS FRESHENING. LESS BULK. o NEED V6 & CLUB CAB. o USE OF CLOTH INTERIOR INCREASING. o PACKAGING OF OPTIONS VERY IMPORTANT.	o DON'T DROP SHORT WHEELBASE. o CONCERNED ABOUT GREATER STEP HEIGHT. o INCLUDE LOW-PRICED APPEARANCE ENHANCE-MENT (BASE MODEL).	o WANT DEFROSTER FOR DUAL REAR DOOR. o PROMOTE CONVERT-A-BED. o BIG VAN COULD CONTINUE INTO 90'S IF QUALITY IMPROVED AND FRESHENED APPEARANCE.	o 4-DOOR IMPORTANT. o DEALERS PAYING $3000 OVER INVOICE TO GET 4-RUNNERS.	o CONVEX MIRRORS: MORE CUSTOMERS DISLIKE THAN LIKE. o WANT CASSETTE & POWER MIRRORS ON TRUCKS.	o NEED MORE FACTORY PROMO! o SAME QUALITY PROBLEMS AS ABOVE. o UPDATE RAM'S HEAD!
HALLISSY DODGE (GEORGE PANDY, GM)	LOWELL, MA "SILICON VALLEY EAST" - AFFLUENT.	450 | 350 OTHER DEALS: TOYOTA, CHEVY, VOLVO, L/M	o DODGE P/U TENDS TO RATTLE WITH LOW MILES. o DELIVERY QUALITY VERY LOW. o 80% OF BUY DECISIONS MADE BY WOMEN. o POOR DURABILITY.	o EASE OF ENTRY, APPEAR-ANCE MUST NOT BE INTIMIDATING TO WOMEN. o PEOPLE LOOKING FOR FUTURISTIC APPEARANCE.	o NEED ULTIMATE SOUND RADIOS, OPULENT FEATURES.	o 4-RUNNER IS VERY HOT. o DAKOTA S/U WOULD BE VERY STRONG SELLER!	o WANT REMOTE CONTROL MIRRORS. o USE 100% FACTORY RADIOS.	o NEED MORE ADVERTISING. o APPREHENSIVE ABOUT F'GLASS PICKUP BOX. o UPDATE RAM'S HEAD!
DODGE CITY (DAN BORTOLUSSI, PRESIDENT)	MILFORD, MA	300 | 400 OTHER DEALS: FORD	o TOO BULKY. o LOW COST EXTERIOR APPEARANCE PACKAGE NEEDED. o NEED 14,000# GVW TRUCK.	o SPACE BEHIND SEAT EXCELLENT IDEA. o DON'T CHANGE PICKUP PROPORTIONS.	o NO SIGNIFICANT COMMENTS ON VANS.	o 4-DOOR NEEDED. o EDDIE BAUER PACKAGE VERY HOT ON BRONCO II.	o CONVEX MIRRORS NOT AN ISSUE. o TRUCK BUYERS LIKE VINYL. o VENT WINDOWS WANTED BY SMOKERS.	o DODGE SALES TRAINING NOT EQUAL TO FORD. o RAM'S HEAD OLD-FASHIONED.

TAB 18

INDIVIDUAL ZONE VISIT REPORT:

SYRACUSE

Inter Company Correspondence

	Telephone	Date
	T6/PVS.8	May 7, 1986

To — Name & Department			CIMS Number
R. O. Eccles	Chief Advance Product Development	Chrysler Center	415-03-10

From — Name & Department			CIMS Number
P. V. Sheridan	Advance Product Development		415-03-10
T. A. Simonsen	Truck Marketing	Chrysler	414-05-46
F. B. Whelan	Components Planning	Center	415-03-08

Subject:

TRUCK DEALER VISITS - SYRACUSE ZONE

The following truck dealers of the Syracuse Zone were visited by the undersigned:

o **DON'S FORD/DODGE CITY** - Utica, NY

- Dennis Cater - General Manager (Dodge City)
- Albert Deering - General Manager (Don's Ford)

o **JAY'S SALES AND SERVICE** - Boonville, NY

- Jay Ischia - Owner
- Howard Trainor - Sales Manager

o **ROYAL CHRYSLER MOTORS** - Owego, NY

- Dwight Harris - Owner

The attached listing encompasses comments received from each dealership and is broadly arranged into power train, full-size pickup, full size van/wagon and general.

Paul V. Sheridan
P. V. Sheridan

Troy Simonsen
T. A. Simonsen

F. B. Whelan
F. B. Whelan

ATTACHMENT

cc: E. S. Clark
J. M. Hossack
P. C. Bates (Regional Manager)
G. J. Relf (Syracuse Zone)
T. D. Willis (Syracuse Zone)

84-110-7878

SYARCUSE ZONE - TRUCK DEALER VISIT COMMENTS

Don's Ford/Dodge City - Monday; April 21, 1986

Power Train

- o 225 is underpowered, but has good reputation.
- o 318 retains excellent reputation; has good driveability and performance but fuel economy needs improvement, especially with automatic transmission.
- o 360 runs smooth but lacks power expected for its size; fuel economy is poor.
- o Dodge City would prefer large gas entry over diesel at present; GM hurt overall image of diesel engines. However, if diesel had performance/fuel economy and name with a reputation, this could be very sellable.
- o 50% of truck showroom traffic is aware of Ford's new MPI 302 engine.
- o Ford 351W used primarily for plowing/towing with 95% using automatics.
- o Most buyers expecting to tow (heavy) will buy Ford's 460 or the 6.9L diesel. Dodge does not participate in heavy towing due to lack of large gas/diesel.
- o If forced to, Don's Ford would retain 6.9L diesel and give up large gas versus reverse scenario.
- o Approximately 50% of Ford's truck showroom traffic is aware of automatic overdrive transmission; Dodge does not need AOD immediately but would like a "good one" in near future.
- o There is not an immediate demand for a 5-speed manual, but imports making buyers aware of this product.

Pickups

- o Pricing is crucial in pickup sales; Chevy doing better than Ford, Dodge pricing biggest selling point.
- o Extended cab desired by families; extra space sometimes used for children.
- o Resale is also very important; Dodge not competitive here.
- o For the most part pickup truck buyers are very loyal; Ford sells on name and past history; a long term reputation is key.
- o Dakota expected to draw some sales from full-size.
- o Some aerodynamics exterior theme refinements are okay for pickup in short run. Major aero-based design change not recommended; perhaps long-run only.
- o Many fleet buyers are switching back to Ranger from import "minis" for durability reasons.

Van/Wagon

- o Full-size van sales have drastically fallen off in this zone; reason unclear but Astro van may be part of reason. Conversion van sales also down.

- o Commercial van buyers tend to be more aware of vehicle construction; i.e. frame versus unitized. In general, wagon buyers indifferent/not aware.

- o Exterior design of Dodge wagon is excellent; no major changes are needed, but a freshening is needed prior to 1991/1992 time frame.

- o Wants N-Body sport utility, then extended cab; although he sells 4x4 Vistas rapidly, 4x4 T115 not considered substitute for sport utility.

General

- o Power train is clearly the priority item versus exterior/interior/feature issues for Dodge although styling is old and a freshening is definately needed for both pickup and van/wagon.

- o Customers are still very fuel economy conscious - current gas pricing considered very temporary.

- o 5/50 considered a minor advantage versus Ford; Ford offers extended service plan (6/60) at reasonable price - 30% rate.

Jay's Sales and Service - Monday; April 21, 1986

Power Train

- o 318 fuel economy appears to be deteriorating versus previous model years; has adequate power, good reputation.

- o 360 fuel economy "okay", power "adequate", driveability "poor".

- o Fuel injection needed "badly".

- o Would like to see a large gas but an all-out 360 with MPI, etc. may be better long run strategy.

- o A "real" diesel with a good name/reputation could be a plus for Dodge trucks.

- o Present Dodge automatic lacks adequate clutch surfaces; tends to wear out under heavy use.

- o Ford's 4.9L inline six an excellent performer; Dodge or Chevy has no comparable package.

- o Bad initial AOD offerings (from GM) has ruined reputation; AOD not wanted unless vast improvements are made.

- o Although Ford's initial IFS problems have been fixed, recommendation is to stay with solid front axle - Ramtrack has been greatly improved recently.

Pickups

- o Dodge pickup quality has drastically improved versus previous model years.

- o Chevy/GMC pickup quality poorest of "Big Three", especially drive train.

- o Undersized tires do not support "Ram Tough" image on Dodge pickups.

- o Would like to see a full-size extended cab pickup as soon as possible.
- o Electronics should not be used in pickup instrument panel - stay with gauges.
- o Minor aero-based design changes okay; no need for radical change in short/medium term - must have at least a freshening prior to 1991/1992.
- o Composite pickup box could have real selling advantage over corrosion-prone metal box.
- o D150 and D250 roof should accommodate optional or aftermarket identification lights (clearance lights) - presently only available on D350, difficult to install later. Modern snow-plow lights also needed.
- o Dodge pickup seats tend to have very high foam densities; possibly too firm. Cold temperature performance of vinyl also poor; too hard in winter temperatures.

Van/Wagon

- o Dodge wagon has the superior exterior design versus Ford/Chevy.
- o Interior trim needs upgrades in content and quality - some door panel problems experienced.
- o Extended "nose" on Ford seems superior for serviceability.

General

- o Ford's "Goodwill" service program very effective - should be considered by Chrysler.
- o A small/mid-size sport utility is needed fast (before N-Body extended) - Ford expected to introduce 4 door in 1986½ - a real opportunity for Dodge.
- o Would prefer that headlight/dimmer switch be moved to stalk.

Royal Chrysler Motors - Tuesday; April 22, 1986

Power Train

- o Basically happy with Dodge power train but fuel economy on 360 very poor; 3.7L driveability and power also a real problem.
- o Durability/power is the priority - good market for stronger 360.
- o Reliable, "proven" engine a real selling point to truck buyers - e.g. 318.
- o A good diesel sellable - would prefer diesel over large gas but would like both. Diesel with manual transmission would be stocked at 60%; automatics 40%.
- o Buyers are typically cautious about fuel injection but are very pleased with Ford 302 MPI once they drive it.

SYARCUSE ZONE - TRUCK DEALER VISIT COMMENTS
(CONTINUED)

- o Four speed automatic overdrive a definate want, especially light duty.
- o Ramtrack 4WD system a real plus - stay with solid front axle versus IFS.
- o Driveline "clunk" a real problem on demo rides.

Pickup

- o "Tough" image with product to back up that image very important in pickups - undersized tires on Dodge price leader does not support image.
- o Should retain base pickup w/o power steering.
- o Tilt-wheel option especially important on custom pickups.
- o ¾ ton pickup for snow-plowing very important.
- o Two-tone paint combinations becoming important to pickups - Ford availability superior.

Van/Wagon

- o Durability/reliability a major concern for van/wagon buyers; Dodge is doing a good job.
- o Serviceability of Dodge considered competitive - no problem here.

General

- o "Value" is key to selling any vehicle - trucks or cars - a combination of price, quality and product content.
- o LAI could be used very effectively in truck commercials - more Corporate advertising support of trucks needed in general.
- o Dwight Harris uses sales pitch that Dodge trucks are or are becoming just like Ford trucks; "Lee Iacocca used to build Ford trucks now he's building Dodge". This sales pitch appears effective.
- o Truck buyers typically buy when need arises - they usually don't order and wait - they buy from stock.
- o "Prospector" packages are good sellers.

TAB 19

PHASE TWO DESCRIPTION / SCHEDULE

TRUCK DEALER VISITS - PHASE I SUMMARY REPORT

PHASE II DESCRIPTION/SCHEDULE

Phase II Description

- Phase II was originally demarcated as the post-May 5, 1986 Concept Approval Meeting portion of the dealer visits. The purpose is a continuation of the Phase I inputs but to checkpoints later in the advance product development process for the full-size truck program.

- During the Phase I visits it was officially announced that two additional zone offices would be formed bringing the total Chrysler sales zones to twenty-five. This leaves fifteen remaining for Phase II visitation. (Advance notice of the additional sales office formations was used to select the Phase I zones, avoiding the "shake-up" environments of the affected zones).

- Phase II will also expand organizational participation to include the Business Groups and Project Liberty. An "Information Meeting" will be scheduled for early June to acquaint the new participants with the program. For the most part, Phase II will have a format similar to that described on the "General Notes" page (Tab 5).

Schedule

- Shown below is the tentative Phase II visit schedule:

Sales Zone	Week Beginning (1986)
Washington, D.C.	6-15
St. Louis	6-22
Phoenix	6-29
New Orleans	7-13
Atlanta	7-20
Denver	7-27
Memphis	8-10
Kansas City	8-17
Philadelphia	8-24
Pittsburgh	9-7
Portland	9-14
Detroit	9-21
Minneapolis	10-5
Charlotte *	10-12
Milwaukee *	10-19

* New

TAB 20

COMMENTS / ACKNOWLEDGEMENTS

TRUCK DEALER VISITS - PHASE I SUMMARY REPORT

COMMENTS/ACKNOWLEDGEMENTS

COMMENTS

- Complete unanimity exist among the dealers, zone management, and the dealer visit teams with respect to the value of Corporate visitation to the truck dealers. Many dealers made special personal arrangements or demands on their subordinates to ensure participation. Likewise, the support and enthusiasm of the ten zones was second only to the precision of their coordination/ accomodation efforts.

- A subtle but important outcome also includes the "education process" that nearly all visit team members underwent during Phase I of the program. The necessity to "Think Trucks" on the part of more Corporate personnel as the first step in the process of enhancing the Dodge truck products was greatly facilitated.

- The fact that our Japanese competitors are constantly visiting their dealers - "and doing so all the way from Tokyo!" - became a tiresome reprimand for many of the visit teams. If nothing else, Phase I verified that the affirmative would be appropriate with respect to the dealer inquiry, "Are you guys going to be visiting with us regularly?"

Acknowledgements

- Advance Planning would like to thank the Chrysler Center personnel who participated and did an admirable job of reporting the discussion content of the Phase I truck dealer visits.

- The management of the ten Phase I zones are also deserving of applause. The zones performed flawlessly in their support and accompaniment of the dealer visits.

- We would like to thank the thirty-five dealers for participating and hereby ensure them that their comments will continue to be sought and are already being "dovetailed" into the planning of both present and future truck products.

- A special thanks goes to Pentastar Travel whose agents assisted with the utmost courtesy and competence; providing a "no-hitches" scenario time and time again, regardless of the frequent changes to the trip itineraries.

- Finally, Advance Planning would like to sincerely thank the many secretaries for their support and for their patience while typing all of this!

ADVANCE PLANNING
REV. 05/13/86 T6/PVS.21

ATTACHMENT AJ

EXPERT WITNESS REPORT - 2 January 2012 REVISION

Kline v. Loman Auto Group, Victoria Morgan-Alcala, et al.

Page Range 7

Pages 1015 – 1021

Perry & Haas, L.L.P.
ATTORNEYS AT LAW

2100 Frost Bank Plaza, P.O. Box 1500, Corpus Christi, Texas 78403-1500
Telephone: 512/880-7500 Facsimile: 512/887-9507
Direct Dial: 512/880-7543

July 15, 1996

Mr. Paul Sheridan
22357 Columbia Street
Dearborn, Michigan 48124-3431

Via Fax: (313) 277-5095

Re: *Gonzalez v. Chrysler*

Dear Paul:

On Friday, July 12, we had a hearing to try to release 30,000 pages of Chrysler documents, all of the depositions taken (including yours), and other materials produced in the case. The Judge basically produced it all. Here is some press coverage that relates to the same. The deposition that you gave in the case is no longer under seal and has been quoted extensively in the Dallas Morning News article. After we won the hearing, I gave them a copy of the transcript. The transcript and the videotape are now considered public record.

You may want to let Courtney know about this, as it may affect what you all want to do in terms of the next step of your lawsuit.

I assume that the above pleases you.

Very truly yours,

PERRY & HAAS, L.L.P.

Mikal C. Watts

Mikal C. Watts

MCW/jlh

Attachments

MIKAL C. WATTS
Attorney at Law

Perry & Haas is a limited liability partnership that includes professional corporations

CAUSE NO. 37,316

JOHN AND TAMMY MATTHEWS, INDIVIDUALLY AND AS NEXT FRIENDS FOR STEVI WESTON, A MINOR	§	IN THE DISTRICT COURT OF
VS.	§	ANDERSON COUNTY, TEXAS
CHARLES ORTIZ SMITH, ELKHART INDEPENDENT SCHOOL DISTRICT, CHRYSLER CORPORATION, AND ROGER CONN CHRYSLER-DODGE-PLYMOUTH-JEEP-EAGLE, INC.	§	THIRD JUDICIAL DISTRICT

ORDER

RE: EXHIBITS TO PAUL SHERIDAN DEPOSITION

On July 12, 1996 certain documents consisting of Exhibits to the Deposition of Paul Sheridan were submitted for in camera inspection. After examining the documents submitted it is ordered that:

(a) The protections claimed for Exhibits: 8,10, 12, 22 and 23 are denied;

(b) The protections claimed for Exhibits: 11, 14, 15, 16, 17, 18, 19, 20, 21 and 50 are sustained.

(c) The Exhibits which are protected pursuant to this order shall remain sealed and filed with the papers of this cause.

(d) The Exhibits submitted which are not protected pursuant to this order are ordered to be placed in a seperate envelope and sealed by the District Clerk for 14 days from this date.

If there is no further order before that date the Clerk is then directed to unseal those records and make them available for inspection during normal business hours

Signed this 22 day of July, 1996.

Presiding Judge

11:20 a.m.

JUL 22 1996

District Clerk

By

Dallas Morning News 7/13/96

Chrysler aware of fault 5 years ago, records say

Company says minivan rear door latches are safe

By Terry Box
Staff Writer of The Dallas Morning News

Chrysler Corp. knew at least five years ago that rear lift-gate latches on its popular minivans built before 1996 were "flimsy" and weaker than those on its competitors' vans, according to court documents released Friday.

The documents also contain allegations by a former Chrysler product planner that efforts to change the latch design were squelched in 1993 and that Chrysler went to some lengths to keep latch problems from being disclosed. The planner was later fired.

In addition, one of the documents indicates that between May and August 1994, hundreds and perhaps thousands of spontaneous lift-gate openings were recorded by Chrysler as brand-new minivans were being transported by trains and trucks to dealerships.

Chrysler maintains that the lift-gate latches are safe and says that it agreed to replace them mostly to reassure its minivan customers.

State District Judge John Calhoon ordered the documents unsealed during a hearing in Palestine in Anderson County. Several lawsuits on behalf of Texas residents injured in Chrysler minivan acci-

Please see Page 19A.

Documents: Chrysler knew of fault 5 years a

Continued from Page 1A.

dents are pending, including one in Judge Calhoon's court.

The cases are among a number of Chrysler minivan lawsuits nationally.

Last year, the National Highway Traffic Safety Administration closed an inquiry into Chrysler's minivans after the automaker responded to controversy about the latches with a repair program. Chrysler agreed to replace the latches on 4.37 million minivans produced between 1984 and 1995.

More than 35 deaths have been attributed to Chrysler minivan rear doors popping open in crashes and ejecting passengers, according to federal safety records.

Judge Calhoon unsealed as many as 30,000 pages of documents the plaintiffs lawyers obtained from Chrysler as they prepared their cases against the automaker. The order unsealing the documents was a result of a petition filed by the lawyers and some media organizations, including the *The Dallas Morning News*. The filing was made under a state law designed to assure public access to court records.

E. Todd Tracy, a Dallas lawyer representing an Anderson County teenager injured in a minivan accident, said he wanted the records released as a "public service."

"As consumers, we go in there and buy cars because we trust the manufacturer," Mr. Tracy said. "When people go to car lots tomorrow, they are going to kick the tires a little harder and ask a few more questions."

Chrysler spokesman Rick Deneau said the company had agreed before the hearing to disclose most of the documents, terming much of the information in them "old news."

When Chrysler developed the minivan in 1984, the vehicle helped pull the company from dire financial straits and went on to become

> "Think about the court of public opinion. Once someone puts out an assertion, a number of people will believe it's true."
>
> — *Rick Deneau, Chrysler spokesman*

Chrysler's "corporate crown jewel," Mr. Deneau said.

"Think about the court of public opinion," he said. "Once someone puts out an assertion, a number of people will believe it's true. The bottom line is you have to respond to it even when you know your product is safe."

At the hearing, Chrysler lawyers fought to keep some records confidential, particularly a 293-page sworn statement by the former product planner-turned-whistleblower.

Paul Sheridan said in the deposition that by 1991, it was "common knowledge" at Chrysler that the minivan had safety problems related to the lift-gate latch.

"The group [of engineers and product planners] was generally aware of what we considered somewhat of a flimsy latch design vis-a-vis the competition," he said in his deposition. "Our latch was not as good as competitive latches."

In late 1991 or early 1992, he said, Chrysler engineers began considering differences in the rear doors of Chrysler minivans and competitive models, including the fact that the rival vehicles had handles and two-stage latches. By early 1993, the automaker was aware of "numerous lawsuits" concerning the latches.

Shortly after that, he said, Chrysler officials rejected a proposal to go to a two-stage latch. In April 1993

Saturday, July 13, 1996 Palestine Herald-Press (Weekend) 25 Cents

Judge releases Chrysler files

Plaintiffs include Elkhart teen's family

By CINDY POLK
Herald-Press Staff Writer

A state district judge's order and an agreement between attorneys resulted in the release of numerous documents to the public concerning Chrysler minivans' rear liftgates.

Judge Jerry Calhoon ordered that the transcript and videotape of the deposition of a former Chrysler employee be released to the public, and denied a motion by Chrysler for a stay to take the matter to an appellate court.

"The public will learn today for the first time that Chrysler has in fact been concealing a known hazard," said E. Todd Tracy, an attorney representing nine people in lawsuits against the company.

Attorney Mikal Watts, who is representing the family of 15-year-old Elkhart girl who was paralyzed after being ejected from a Chrysler minivan in an accident, said the judge's ruling was a victory "for the owners of minivans across the country who have been badly deceived by Chrysler into thinking there may not be a problem."

A statement from Chrysler said it is reviewing its available options, including an appeal, and will continue to assert its right to protect confidential and competitively sensitive business information.

Chrysler spokesman Rick Deneau said the federal government never had a finding of a defect in the minivans. What is important is that Chrysler announced in 1995 a service action to replace the latches, he said.

Last year Chrysler asked more than 4 million owners of 1984-1995 Chrysler Town & Country, Dodge Caravan and

See CHRYSLER, Page 10

Page 1 Continued

Chrysler

Continued from Page 1

Plymouth Voyager minivans to bring them in for installation of a free stronger liftgate latch.

Although Chrysler did not dispute the release of some documents Friday, its attorneys argued that former employee Paul Sheridan's deposition was to be sealed per agreement with plaintiffs' attorneys. They also objected to the release of information concerning pull tests on the 1996 model minivans, saying the information was not relevant to the case on trial.

Watts said nothing in Sheridan's deposition could be remotely considered a trade secret and therefore protected from dissemination. He also argued that plaintiffs' attorneys made it clear they would fight the agreement "signed under duress" to keep the deposition sealed.

In his deposition, Sheridan said it was "common knowledge" at Chrysler as early as 1991 that there was a safety problem with its minivan liftgate latches. He was first told in April 1993 that if they changed the latches "we will indict ourselves," he said.

In Chrysler's statement, the company said Sheridan was fired for breach of confidentiality, but while employed there he had no responsibility for safety, engineering, design or manufacturing. His role was to identify new product features that might be considered for future models from a marketing standpoint, it said.

Watt's client, Stevi Weston, was rendered a paraplegic following a July 1995 accident in which the 1994 Dodge Caravan she was traveling overturned, ejecting her and three others.

The documents released Friday "very clearly show Chrysler's knowledge of the problems they had. It shows Stevi Weston is not the only one, there are hundreds like her across the country and Chrysler has tried to keep it secret," Watts said.

Among the documents released Friday that Tracy said supports their case:

- Some 2,100 incidents were recorded of liftgates opening during transport by rail and truck to dealerships. "The reason that is significant is that it illustrates that you don't even have to be in an accident for those things to come open," Tracy said.
- Three customers of a Florida car rental company reported the liftgates opening while they drove off the parking lot.
- Chrysler had received notice of 40 lawsuits concerning the liftgate latches by May 1994, when it reported to the federal government that it was aware of 18 lawsuits and four claims pending.
- Chrysler began destroying test data in October 1988, when it had three lawsuits pending against it. The company said it destroyed the data pursuant to its document retention policy, but Tracy said documents released Friday showed the company destroyed certain tests but not in chronological order.
- Pull test data show the Chrysler 1994 minivan had the weakest latch in comparison to Ford, Mercury, Toyota, Mazda and VW models. Also, Chrysler models were the only ones to have only a primary latch, as opposed to others that had primary and secondary latches.

Chrysler has maintained that fewer than 200 liftgates opened during rail shipments, which was not comparable to driving because the minivans were tied down and robbed of their own suspension.

Calhoon will review some documents outside court to determine if they should be made public. Tracy said those are mostly safety leadership team minutes relating to marketing.

Trial in the case is set for November.

Christi Caller-Times Sunday, July 14, 1996/B5

Chrysler was aware of latch defects 5 years ago, court records indicate

Judge unseals documents in Anderson County lawsuit against automaker

• Several lawsuits on behalf of Texans injured in Chrysler minivans are pending.
• The cases involve lift-gate latches on the minivans.

Associated Press

DALLAS – Rear lift-gate latches on Chrysler Corp.'s popular minivans built before 1996 were "flimsy" and weaker than those on competitors' vans, with the company aware of the defect at least five years ago, documents released in a Northeast Texas court show.

The documents were ordered unsealed Friday by State District Judge John Calhoon during a hearing at Palestine.

Several lawsuits on behalf of Texans injured in minivan wrecks are pending, including one in the Anderson County court.

Accusations by a former Chrysler product planner that efforts to change the latch design were squelched in 1993 and that the automaker tried to keep latch problems from being disclosed were included in the documents.

The planner was later fired.

One document also indicates that hundreds and perhaps thousands of spontaneous lift-gate openings were recorded by Chrysler between May and August 1994 as brand-new minivans were being transported by trains and trucks to dealerships.

The company contends that the lift-gate latches are safe and that it agreed to replace them mostly to reassure its minivan customers.

The National Highway Traffic Safety Administration closed an inquiry last year into Chrysler's minivans after the automaker responded to controversy about the latches with a repair program.

Chrysler agreed to replace the latches on 4.37 million minivans produced between 1984 and 1995.

Federal safety records show more than 35 deaths have been attributed to Chrysler minivan rear doors popping open in crashes and ejecting passengers.

As many as 30,000 pages of documents the plaintiffs' lawyers obtained from Chrysler were unsealed by Calhoon.

The order unsealing the documents was a result of a petition filed by the lawyers and some media organizations, including *The Dallas Morning News*. The filing was made under a state law designed to assure public access to court records.

Dallas lawyer E. Todd Tracy, who represents an Anderson County teen injured in a minivan accident, said he wanted the records released as a "public service."

"As consumers, we go in there and buy cars because we trust the manufacturer," Tracy said..

ATTACHMENT AK

EXPERT WITNESS REPORT - 2 January 2012 REVISION

Kline v. Loman Auto Group, Victoria Morgan-Alcala, et al.

Page Range 10

Pages 1023 – 1032

HARRIS & WATTS P C

Attorneys at Law

Mikal C. Watts
Attorney at Law

Telephone: (361) 887-0500
Facsimile: (361) 887-0055

March 24, 2000

Mr. Thomas Kienbaum
KIENBAUM, OPPERWALL, HARDY & PELTON, P.L.C.
325 South Old Woodward Avenue
Birmingham, Michigan 48009
Phone: (248) 645-0000

Via Fax: (248) 645-1385

Re: *LeCompte v. DCC*

Dear Mr. Kienbaum:

I am in receipt of your letter of yesterday[1] wherein you seek to "confirm" my conversation with Florida counsel. First, judging by your recitation of the same, you confirm incorrectly. Second, the fact is that the David Tyrell E-mail[2] has already been widely disseminated by me and others to other persons in the plaintiffs' automotive defect bar. Discovery efforts already are specifically being planned and coordinated among the several hundred truth-seeking members of AIEG to depose each of the members of the Door Hardware Workteam and the NS Safety Leadership Team in order to document DCC's concerted and now-documented efforts to cause its employees "to become incensed or outraged" at Paul Sheridan's willingness to tell the truth. Third, I can assure you that an E-mail planning a concerted smear campaign at a material witness in Texas litigation is not protected by the attorney-client privilege under either Texas or Florida law. If you disagree, I encourage your client to seek the opinion of a Nueces County, Texas judge with jurisdiction over my mouth and my mailbox, or one with jurisdiction over the Attorneys' Information Exchange Group in Birmingham, Alabama. Finally, I am shocked at the temerity of your firm and your client to once again seek a court-imposed "muzzle" on one of the truly honorable whistleblowers this country has ever seen, who according to your client's own national counsel, Mr. Tyrrell, "was at Chrysler for an extended period of time, had a good work history according to his late reviews and awards," and who is "organized, obsessive, detailed," and who "will present a ... superior appearance as a witness."

Imagine the safety that could have been incorporated into Chrysler vehicles over the past five years had your firm not been successful in keeping Chrysler's conduct completely sealed from public view through a now-lapsed "gag order." The Honorable court handling your case against Sheridan, who no doubt initially decided the issue

---

[1] Attached hereto as Exhibit "A" for your reference.

[2] Attached hereto as Exhibit "B" for your reference.

based upon your firm's and your client's representations, was entirely correct in his recent decision to let the injunction lapse.

Although I am not certain whether Daimler's Germany recognizes a first amendment right to free speech,[3] I am certain your client's American subsidiary, Chrysler, is well aware of the fact that this country does recognize free speech rights.

Certainly providing truthful testimony in a brain-damaged baby case involving a vehicle defectively designed between seven and ten years ago should be applauded, instead of responded to by your former employer seeking to extend a five-year muzzle on entirely specious grounds.

I trust you advised the Honorable court that Sheridan was designated as a material fact witness early-on in that litigation by the Plaintiffs.[4] I trust that in your "motion to re-muzzle", you advised the Honorable court that Sheridan's affidavit references only documents produced to me in litigation, which according to the terms

---

[3] Attached hereto as Exhibit "C" for your reference.

[4] As Justice Ginsberg recently noted in *Baker v. General Motors*: "Most essentially, Michigan lacks authority to control courts elsewhere by precluding them, in actions brought by strangers to the Michigan litigation, from determining for themselves what witnesses are competent to testify and what evidence is relevant and admissible in their search for the truth. See Restatement (Second) of Conflict of Laws, 137-139 (1969 and rev.1988) (forum's own law governs witness competence and grounds for excluding evidence); *cf. Societe Nationale Industrielle Aerospatiale v. United States Dist. Court for Southern Dist. of Iowa*, 482 U.S. 522, 544, n. 29, 107 S.Ct. 2542, 2556, n. 29, 96 L.Ed.2d 461 (1987), (foreign "blocking statute" barring disclosure of certain information "do[es] not deprive an American court of the power to order a party subject to its jurisdiction to produce [the information]"); *United States v. First Nat'l City Bank*, 396 F.2d 897 (C.A.2 1968) (New York bank may not refuse to produce records of its German branch, even though doing so might subject the bank to civil liability under German law).... In sum, Michigan has no authority to shield a witness from another jurisdiction's subpoena power in a case involving persons and causes outside Michigan's governance. Recognition, under full faith and credit, is owed to dispositions Michigan has authority to order. But a Michigan decree cannot command obedience elsewhere on a matter the Michigan court lacks authority to resolve. *See Thomas v. Washington Gas Light Co.*, 448 U.S. 261, 282-283, 100 S.Ct. 2647, 2661, 65 L.Ed.2d 757 (1980) (plurality opinion) ("Full faith and credit must be given to [a] determination that [a State's tribunal] had the authority to make; but by a parity of reasoning, full faith and credit need not be given to determinations that it had no power to make.").

In *LeCompte*, Judge J. Ray Gayle accepted Mr. Sheridan's affidavit as evidence, and made no pronouncement from the bench that Mr. Sheridan was not welcome to testify in his courtroom.

of those cases' protective orders, are no longer confidential.[5] I trust that in your motion to re-muzzle, you have advised the Honorable court that Sheridan's testimony involves a vehicle line which has been on the road for years, subject to vehicle tear-downs and competitive engineering, and a vehicle line which already is entirely being replaced by Chrysler with its "RS" line of minivans whose designs have been completed by the date of this writing.[6] I trust you advised the Court that of the previously-produced documents referenced in Sheridan's affidavit, the vast majority of them were produced in a deposition that Chrysler's employment law firm, Dickinson, Wright, defended[7], and that therefore, any attempt by Chrysler to insinuate that Sheridan disclosed "new" information would be a gross fraud on the Court. I trust that in your motion to re-muzzle, you advised the Honorable court that Sheridan's affidavit testimony was confirmed in almost every respect by the deposition testimony of Chrysler's own corporate representative in *LeCompte*.[8]

In Texas, one of our great Supreme Court justices, Hon. Franklin Spears, wrote that "the ultimate purpose of discovery is to seek the truth, so that disputes may be decided by what the facts reveal, not by what facts are concealed."[9] In an effort to have disputes decided across the nation by "what facts are concealed," your client has, in my humble opinion wrongfully terminated an honorable man, disgracefully trumped-up charges against him that subsequently have been proven meritless, and shamefully shackled him with a gag order lasting five years, even though your own client's fellow employees showered him with glowing praise in performance reviews just weeks before Chrysler wrongfully terminated him. I would suggest that if Chrysler believes Paul Sheridan is such a threat, it immediately should permit me to depose all persons whom it believes will prove him a liar. We can then compare their sworn testimony with the representations made by your firm in Court in the *Chrysler v. Sheridan* litigation, and see whether it is Paul Sheridan or his former employer that is spreading falsehoods.

---

[5] *See* Rule 76a Order of 1996 of Anderson County, Texas District Court Judge Calhoun in *Matthews v. Chrysler*.

[6] *See* testimony of Dennis Malecki in *LeCompte v. Chrysler*.

[7] *See* Deposition of Paul Sheridan, in *Gonzalez/Matthews v. Chrysler*, dated May 2, 1996.

[8] *See* Deposition of David Monette in *LeCompte v. Chrysler*, dated February 29, 2000.

[9] *Jampole v. Touchy*, 673 S.W.2d 569 Tex. 1984).

I hope this letter will assist you in clarifying our respective positions on this matter.

Very truly yours,

Mikal C. Watts

P.S.:

I have just received a copy of your Brief in support of Chrysler's Motion to re-Muzzle. Among the myriad misrepresentations made therein, the one containing particularly-strong stench to me is your blatant lie to the Court with respect to how the *Matthews* documents became public. To insinuate that those documents were made public by me filing them behind Chrysler's back is shameful; in fact, Judge Calhoun conducted a five-hour hearing before ruling that the documents should be released according to Rule 76a. You may want to pull up the *Dallas Morning News* coverage of the hearing to refresh your recollection, so that you can file a retraction of this falsehood with the Court immediately.

cc:

Richard Greenberg - *60 Minutes*	Via Fax: (212) 975-0322
Bill Vlassic - *Detroit News*	Via Fax: (313) 222-1461
Milo Geyelin - *Wall Street Journal*	Via Fax: (212) 416-2653
Jeffrey Ball - *Wall Street Journal* - Detroit Bureau	Via Fax: (313) 963-6527
AIEG Executive Committee	

FILE COPY
791
mcw
JGW
JLB
my
as

KIENBAUM OPPERWALL
HARDY & PELTON, P.L.C.
ATTORNEYS AND COUNSELORS

325 South Old Woodward Avenue
Birmingham, Michigan 48009
Phone (248) 645-0000
Fax: (248) 645-1385

FACSIMILE TRANSMISSION SHEET

Date: March 23, 2000

To: Mikal C. Watts
Fax #: (361) 887-0055
Phone:

Total Pages: 3, including this cover sheet
From: Thomas G. Kienbaum
Regarding: LeCompte v. DCC

If you have not received the total number of pages, please call 248-645-0000. Thank you.

MESSAGE:

IMPORTANT: This facsimile transmission contains confidential and/or legally privileged information intended only for the use of the individual(s) named on the transmission sheet. If you are not the intended recipient, you are hereby notified that any disclosure, copying, distribution or the taking of any action in reliance on the contents of this facsimile transmission is strictly prohibited. If you have received this communication in error, please notify us immediately by telephone and return the original facsimile to us at the above address via U.S. Postal Service. Thank you.

RECEIVED
MAR 23 2000
BY:.....

EXHIBIT "A"

KIENBAUM OPPERWALL HARDY & PELTON, P.L.C.

ATTORNEYS AND COUNSELORS

Margaret Carroll Alli
Julia Turner Baumhart
Robert Bruce Brown
Elizabeth Hardy
Thomas G. Kienbaum
Noel D. Massie
Theodore R. Opperwall
Eric J. Pelton
Jeffery M. Peterson
Kelvin W. Scott

325 South Old Woodward Avenue
Birmingham, Michigan 48009
Phone (248) 645-0000
Fax (248) 645-1385

1037 First National Building
Detroit, Michigan 48226
Phone (313) 961-3926
Fax (313) 961-3945

March 23, 2000

Via Facsimile (361) 887-0055

Mikal C. Watts, Esquire
Harris & Watts, P.C.
555 N. Carancahua
Tower II. Building, Suite 1630
Corpus Christi, TX 78478

Re: LeCompte v. DCC

Dear Mr. Watts:

This letter will confirm the conversation you had with Bob Fulton today concerning David Tyrrell's e-mail to DaimlerChrysler Corporation's counsel, Rita Burns. Mr. Tyrrell's e-mail related to Paul Sheridan's affidavit in LeCompte v. DaimlerChrysler Corporation. As Bob explained to you, this e-mail was inadvertently attached to an exhibit to a motion filed on behalf of DaimlerChrysler Corporation in the action pending against Mr. Sheridan. Mr. Tyrrell's e-mail is clearly a privileged attorney-client communication, and it is obvious that its disclosure was inadvertent. I am filing a motion today to remove the attorney-client communication from the pleading filed recently in the Oakland County Circuit Court, and to obtain return of any distributed copies. I understand you will not hereafter distribute the inadvertent attorney-client communication that you received from Mr. Sheridan's counsel, Courtney Morgan, until you hear further on the matter.

If you have any questions in this regard, please give me a call. We appreciate your cooperation.

Very truly yours,

KIENBAUM, OPPERWALL, HARDY & PELTON

Thomas G. Kienbaum

cc: David R. Tyrrell
Rita Burns
Gregory J. Ridella

David Tyrrell <dtyrrell@hwhlaw.com> on 02/29/2000 11:16:37 AM

To: "Burns Rita - Chrysler (E-mail)" <rab26@daimlerchrysler.com>
cc: "Gluckman Ken - Chrysler (E-mail)" <kig@daimlerchrysler.com>, "Louann Van Der Wiele (E-mail)" <lv14@daimlerchrysler.com>, "Kidney Michael - Hogan & Hartson (E-mail)" <mlkidney@hhlaw.com>, "Micki S. Singer (E-mail)" <mss1@sdma.com>, "Ridella Gregory (E-mail)" <gjr10@daimlerchrysler.com>, Bob Fulton <bfulton@hwhlaw.com>
Subject: Sheridan's Affidavit - LeCompte v. DCC

Re: Sheridan's Affidavit - LeCompte v. DCC - CASE ID: 1030000

Rita,

I reviewed Watts' response to the Motion for Summary Judgment in LeCompte which includes a detailed affidavit from Paul Sheridan. Interestingly, the affidavit is executed in Texas and, therefore, apparently Sheridan has been spending time with Watts.

Sheridan's affidavit goes far beyond any subject matter we have seen in the past. I predict you are going to see a lot more of this guy in many different types of cases. He is going to become the new, improved, Tom Flanagan. He was at Chrysler for an extended period of time, had a good work history according to his late reviews and awards, and is willing to testify about Chrysler's "knowledge" on any number of different issues. I also expect he will be a librarian of information and documents. This is the role Tom Flanagan has filled in the past - Sheridan will be much better organized, obsessive, detailed, and will present a far superior appearance as a witness.

From John Stilson's report in LeCompte I anticipated that Sheridan would be used to describe Chrysler's knowledge of ejection-related issues from his NS SLT work period. I anticipated Watts would use Sheridan with Flanagan and the documents and past testimonies he developed during the liftgate latch litigation to enhance his allegation that "[Chrysler] was aware of the relationship between occupant ejection from the vehicle and the increased likelihood of death and serious bodily injury. The evidence was also clear that effective door latches were critical to prevent this, since the seat belt usage rate was very low." He wants to make latches generic and dovetail all the liftgate latch and side door latch failure issues with the side sliding door latch. Watts certainly uses Sheridan for this purpose. However, Sheridan is also used to go far beyond the "generic" latch and ejection risk issues.

Sheridan's affidavit makes extensive reference to the Door Hardware Work Team and meeting minutes from that team. The minutes were taken from Bob Vend's deposition who, of course, testified that Sheridan never attended any of those meetings and whose name does not appear as an attendee at these meetings. Therefore, Sheridan will apparently base a significant amount of his more specific testimony on meeting minutes from meetings he did not attend.

Sheridan also spends considerable time talking about the reduction of the NS budget; the "major upper management concern was product cost versus approved program target levels." He makes frequent references to cost reductions

EXHIBIT "R"

necessitated by budget decreases. Indeed, he makes references to "upper management" decisions by Messrs. Eaton, Lutz, Gale and Castang. For example, Sheridan states "upper management at Chrysler was already aware that its new NS body minivan would not have a latch in the front of the sliding door, while most other offerings did have such a second latch. However, cost and pricing pressures were stated as the reason that the body hardware budget must be reduced, as opposed to allowing it to increase to accommodate 'real world' safety requirements." Thus, Sheridan expands his area of involvement and expertise to include budgeting and cost considerations.

Next, he makes specific references to the side sliding door latch and Chrysler's alleged knowledge that this latch was inadequate; "the safety importance of multiple latching mechanisms on doors such as the sliding door and the real liftgate was discussed and communicated to upper management. However, because of the pricing and cost pressures already on the minivan, upper management insisted that no other latching features be added; rather, management insisted that the body hardware investment and piece costs be lowered still further."

His expanded knowledge also goes to testing. He is apparently ready to testify that the NS SLT "strongly recommended" that the NS be testing with offset impacts to evaluate structure. These recommendations were, according to Sheridan, rejected by the Production Direction Team.

Finally, Sheridan is now a statistician, apparently from his survey work, and a glass expert. He notes that he and other members of the door hardware work team "extensively" discussed the type of glass to be used in the side sliding door. The NS SLT believed the use of "shatter proof" glass should be further discussed and this recommendation was rejected by the Product Direction Team due to "cost." He also noted that Mr. Lutz made the decision that the glass would be fixed rather than a window that could be opened.

Sheridan further places knowledge within Chrysler in stating that he recalls "specific conversations and discussions with management at Chrysler during meetings when the fact was discussed that ejected occupants are statistically more likely to be killed or seriously injured in a collision if they were ejected from a vehicle, than if they remained in the vehicle."

I intend to spend considerable time with Sheridan going through his 20-page affidavit and its 58 exhibits to pin him down precisely to documents, persons, etc. This affidavit should be shown to other members of the Door Hardware Work Team and the NS SLT. In the past those employees never seemed to become incensed or outraged by Sheridan's statements. Perhaps this affidavit will help them in that regard.

This guy is not going away any time soon.

David

cc: Kenneth Gluckman
Louann Van Der Wiele
Michael Kidney
Micki Singer
Greg Ridella
Bob Fulton

Amendment I

Congress shall make no law respecting an establishment of religion, or prohibiting the free exercise thereof; or abridging the freedom of speech, or of the press; or the right of the people peaceably to assemble, and to petition the government for a redress of grievances.

EXHIBIT "C"

ATTACHMENT AL

EXPERT WITNESS REPORT - 2 January 2012 REVISION

Kline v. Loman Auto Group, Victoria Morgan-Alcala, et al.

Page Range 9

Pages 1034 – 1042

The Detroit News detnews.com AUTOS insider

Brookline Management Co. Featured in: apartments.com

Find an Apartment!

Latest Autos Insider reports

Previous Story Next Story

SEARCH detnews.com

Go

Home Page
Essentials
CyberSurveys
Forums
Photo Galleries
Weather
Horoscope
Lottery
Giveaways
Crossword
Contact Us
Autos
Autos Insider
Drive
-- Car Reviews
-- Latest Deals
-- Model Reports
Joyrides
Business
Business
Money & Life
Careers
-- Find a Job
Real Estate
-- Find a Home
Metro
Metro/State
Wayne
Oakland
Macomb
Livingston
Commuting
Obituaries
-- Death Notices
Schools
Special Reports
Editorials
Columnists
Detroit History
Nation/World
Nation/World
Politics/Gov
Census
Health
Religion
Technology
Sports
Sports Insider
Lions/NFL
Pistons/NBA
Red Wings/NHL
Tigers/MLB
MSU
U-M
More Colleges
High Schools
Golf
Motor Sports
Outdoors
More Sports
Scoreboards
Entertainment
Entertainment
Events
-- Event Finder
Movies/TV/DVD
-- Movie Finder
-- TV Listings
Eats & Drinks
-- Restaurants

Sunday, July 13, 2003

Robin Buckson / The Detroit News

Paul Sheridan, right, is working with attorney Courtney Morgan on the product liability lawsuit against Chrysler involving the 2001 death of Nancy Lou Whitt and the lack of brake-shift interlock devices on Chrysler minivans.

Exclusive Report

Safety Firebrand Refuses to Relent

Fired employee battles Chrysler in courtroom

By Bill Vlasic / *The Detroit News*

DETROIT -- Paul Sheridan sifted through the pile of police reports, depositions and legal briefs, and stopped at the autopsy photographs of Nancy Lou Whitt.

He had seen dozens of autopsies in more than 100 product-liability lawsuits. But the Whitt case shocked him.

Whitt, 41, died in the driveway of her Tennessee home, her chest and neck crushed under the left rear wheel of her Chrysler minivan. Police said her 5-year-old son had accidentally pulled the gearshift lever, putting the van into reverse with his mother behind it.

Without a trace of expression, Sheridan studied the photos in the Whitt family's attorney's office in downtown Detroit.

Robin Buckson / The Detroit News

Paul Sheridan sees himself as an

Marketplace Detroit

- Browse the Classifieds
- New & Used Cars
- Employment
- Homes or Apartments
- Shop Online

Home Delivery Center

- Start home delivery
- Renew subscription
- Customer service

Autos Insider

- Autos Insider index for Sunday, July 13, 2003
- Safety Firebrand Refuses to Relent
- Minivan safety is first big task
- Gear-shift safety is next crusade
- Buy-here, pay-here car dealerships find niche
- Not your father's tank of gasoline
- Delphi plans to increase investments in China
- Renault leads 2.9% gain in June European car sales
- New F-150 price to rise slightly
- Ford names new CFO; two vice presidents
- Federal-Mogul Corp. president named CEO
- Customer satisfaction, quality top Honda agenda
- Delphi to increase investment in China
- Ford insider gets CFO job
- Ford raises top price of F-150 pickup to $35,570
- Federal-Mogul appoints McClure as CEO
- Chrysler sues 3 lawyers, accuses them of filing bogus $2 billion lawsuit
- Firms rated on global warming
- Delphi's Asia-Pacific sales up 30 percent, CEO says
- Honda will boost sales with new models and revamps, new president says
- DaimlerChrysler may end stock options
- DaimlerChrysler puts Georgia plant on hold

– Wine Report
Books
CD Reviews
Escapes
Casino Guide
Michigan's Best
Living
Lifestyle
Homestyle
Fitness
Forums
News Talk
Autos Talk
Wings Talk
Lions Talk
Pistons Talk
Tigers Talk
Big 10 Talk
High Schools
Movie Talk
Tech Talk

Then he lost it.

"It pisses me off," he snapped. "Why should I have to look at these? Maybe Mr. Eaton should have to look at these photographs and tell me I'm some disgruntled employee making a living on Chrysler safety."

He worked for Chrysler Corp. for a decade, and chaired the safety team on an all-new minivan when Bob Eaton was the automaker's chief executive.

But since 1994, Sheridan has found a new calling as perhaps the most prolific whistleblower in the auto industry.

Chrysler fired him for allegedly leaking documents, sued him for $82 million and unleashed teams of attorneys to keep him off the witness stand.

Yet Sheridan couldn't be muzzled. Instead, he became an around-the-clock resource for trial lawyers targeting the most popular product in Chrysler history: the minivan.

"It's sort of a new career," said the 51-year-old former product planner. "What I could not accomplish while I was inside the company, I'm accomplishing now with my new team, the plaintiffs' bar."

automotive whistleblower crusading for minivan safety. Chrysler, who fired him, calls him a disgruntled employee who leaked confidential company information.

Robin Buckson / The Detroit News

Sheridan's latest focus is the lack of brake-shift interlocks on Chrysler minivans.

▸ Comment on this story
▸ Send this story to a friend
▸ Get Home Delivery

Chrysler -- now part of DaimlerChrysler AG -- brands Sheridan a discontented, ex-middle manager who earns $100 an hour peddling his services to attorneys churning out lawsuits against the company.

But inside the automaker, Sheridan is regarded as a potent opponent.

In an e-mail to Chrysler lawyers in February 2000, David Tyrrell, the company's top outside safety litigator, called Sheridan "organized, obsessive and detailed," and warned of the threat he posed.

"He was at Chrysler for an extended period of time, had a good work history according to his late reviews and awards, and is willing to testify about Chrysler's knowledge on any number of different issues," Tyrrell said.

The e-mail ended with a prediction.

"This guy," Tyrrell said, "is not going away any time soon."

He hasn't.

Sheridan has been a witness or consultant in litigation over air bags, seat belts, liftgate latches, doors and fuel systems. In the past six months, lawyers have flown him to New York, Wisconsin, Nebraska, Florida, Texas and Hawaii to testify, give depositions or sign affidavits.

He's currently focused on Chrysler minivans and light trucks lacking brake-shift interlock, a device that prevents shifting of the gear-shift lever without depressing the brake.

The Whitt wrongful-death case, filed in U.S. District Court in Nashville, could be the first brake-shift lawsuit to go to trial. Sheridan is

• Ford may cut Europe output
• Hyundai may build plant in Slovakia

Sections for this date
Sunday, July 13, 2003
Select index

Copyright © 2003
The Detroit News.
Use of this site indicates your agreement to the Terms of Service (updated 12/19/2002).

expected to be a key witness.

In prior cases, Chrysler has attacked Sheridan's credentials and motives. At a May 16 court hearing in Florida, Tyrrell lashed out at an affidavit Sheridan filed in a brake-shift case.

"He runs around the country as a disgruntled former employee giving testimony against Chrysler," Tyrrell said.

Broward County Judge Victor Tobin offered a different view.

"One man's disgruntled former employee," Tobin said, "is another man's expert."

You can reach Bill Vlasic at (313) 222-2152 or mailto:bvlasic@detnews.com

▶ Previous Story ▶ Next Story

The Detroit News detnews.com AUTOS insider

Brookline Management Co. Featured in: apartments.com

Find an Apartment!

Latest Autos Insider reports

Previous Story Next Story

SEARCH detnews.com

Go

Home Page
Essentials
CyberSurveys
Forums
Photo Galleries
Weather
Horoscope
Lottery
Giveaways
Crossword
Contact Us
Autos
Autos Insider
Drive
-- Car Reviews
-- Latest Deals
-- Model Reports
Joyrides
Business
Business
Money & Life
Careers
-- Find a Job
Real Estate
-- Find a Home
Metro
Metro/State
Wayne
Oakland
Macomb
Livingston
Commuting
Obituaries
-- Death Notices
Schools
Special Reports
Editorials
Columnists
Detroit History
Nation/World
Nation/World
Politics/Gov
Census
Health
Religion
Technology
Sports
Sports Insider
Lions/NFL
Pistons/NBA
Red Wings/NHL
Tigers/MLB
MSU
U-M
More Colleges
High Schools
Golf
Motor Sports
Outdoors
More Sports
Scoreboards
Entertainment
Entertainment
Events
-- Event Finder
Movies/TV/DVD
-- Movie Finder
-- TV Listings
Eats & Drinks
-- Restaurants
-- Wine Report
Books
CD Reviews

Sunday, July 13, 2003

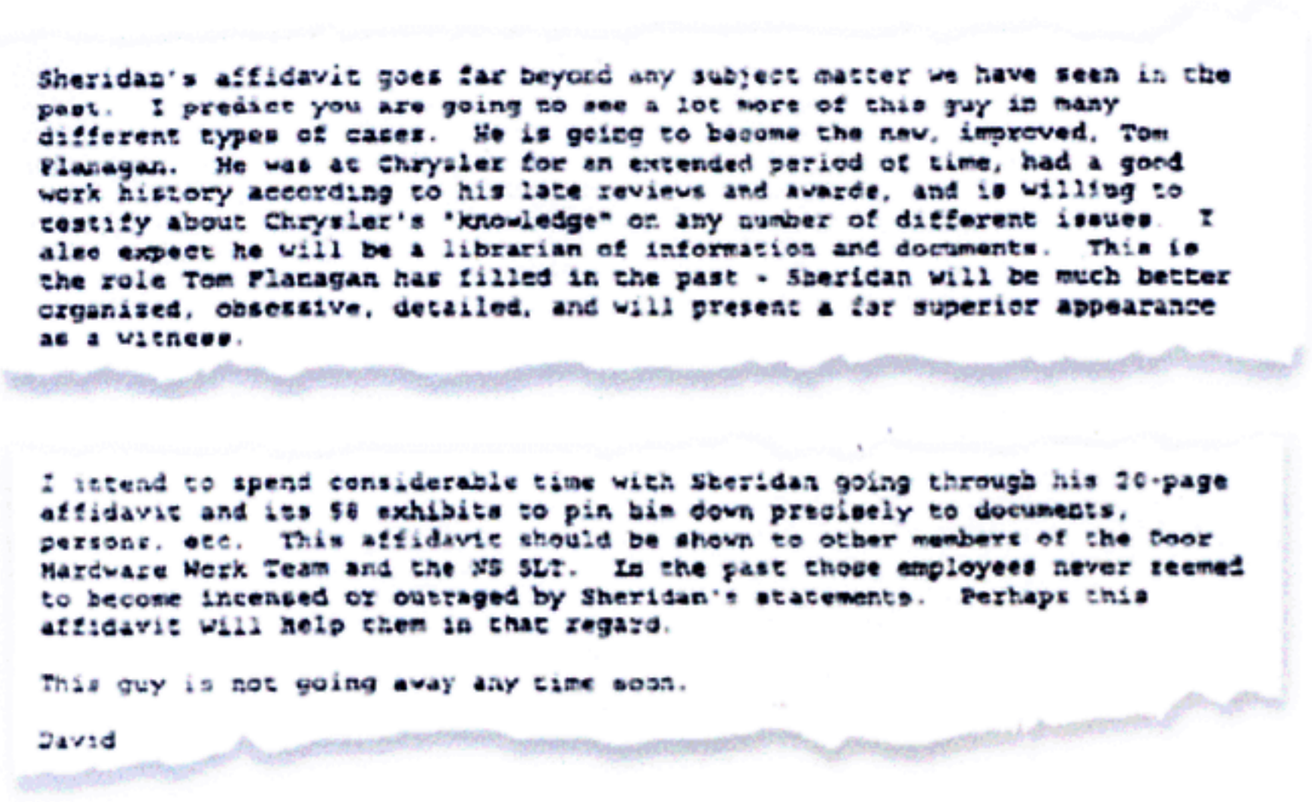

Sheridan's affidavit goes far beyond any subject matter we have seen in the past. I predict you are going no see a lot more of this guy in many different types of cases. He is going to become the new, improved, Tom Flanagan. He was at Chrysler for an extended period of time, had a good work history according to his late reviews and awards, and is willing to testify about Chrysler's "knowledge" on any number of different issues. I also expect he will be a librarian of information and documents. This is the role Tom Flanagan has filled in the past - Sherican will be much better organized, obsessive, detailed, and will present a far superior appearance as a witness.

I intend to spend considerable time with Sheridan going through his 20-page affidavit and its 58 exhibits to pin him down precisely to documents, persons, etc. This affidavit should be shown to other members of the Door Hardware Work Team and the NS SLT. In the past those employees never seemed to become incensed or outraged by Sheridan's statements. Perhaps this affidavit will help them in that regard.

This guy is not going away any time soon.

David

Robin Buckson / The Detroit News

This February 2000 e-mail to Chrysler lawyers from David Tyrrell, the company's top outside safety litigator, called Sheridan "organized, obsessive and detailed." The e-mail surfaced in Chrysler's legal efforts to muzzle Sheridan in court cases against the automaker. Tyrrell concluded with a warning: "This guy is not going to go away soon."

Minivan safety is first big task

By Bill Vlasic / The Detroit News

Part 2

After eight years as a rank-and-file planner with Chrysler, Sheridan got his big break in the spring of 1993.

As head of the safety leadership team for the company's new minivan, Sheridan had a unique opportunity to put his stamp on Chrysler's most important product.

Chrysler dominated the minivan market, and planned to invest $2.6 billion on a total redesign. Sheridan's team was charged with assessing safety features on competing models and applying them to the new van.

Meticulous and compulsively organized, Sheridan was considered a dogged worker with a stubborn streak. A 1991 performance review rated his leadership and problem-solving skills "superior." Another review called him "aggressive,

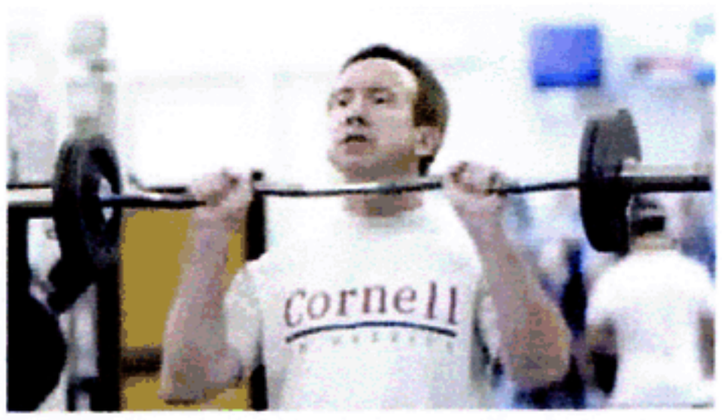

Robin Buckson / The Detroit News

When Sheridan isn't flying from city to city as a consultant in Chrysler product liability lawsuits, he fits in workouts at the Dearborn Health and Racquet Club.

Paul Sheridan

Age: 51; born Feb. 3, 1952.

Education: Bachelor of science degree from the State University of New York. Master's degree in business administration from Cornell University.

Career:

* Worked at Ford Motor Co. from 1981-84. Joined Chrysler Corp. in 1984 as a

Marketplace Detroit

- Browse the Classifieds
- New & Used Cars
- Employment
- Homes or Apartments
- Shop Online

Home Delivery Center

- Start home delivery
- Renew subscription
- Customer service

Autos Insider

- Autos Insider index for Sunday, July 13, 2003
- Safety Firebrand Refuses to Relent
- Minivan safety is first big task
- Gear-shift safety is next crusade
- Buy-here, pay-here car dealerships find niche
- Not your father's tank of gasoline
- Delphi plans to increase investments in China
- Renault leads 2.9% gain in June European car sales
- New F-150 price to rise slightly
- Ford names new CFO; two vice presidents
- Federal-Mogul Corp. president named CEO
- Customer satisfaction, quality top Honda agenda
- Delphi to increase investment in China
- Ford insider gets CFO job
- Ford raises top price of F-150 pickup to $35,570
- Federal-Mogul appoints McClure as CEO
- Chrysler sues 3 lawyers, accuses them of filing bogus $2 billion lawsuit
- Firms rated on global warming
- Delphi's Asia-Pacific sales up 30 percent, CEO says
- Honda will boost sales with new models and revamps, new president says
- DaimlerChrysler may end stock options
- DaimlerChrysler puts Georgia plant on hold
- Ford may cut Europe output
- Hyundai may build plant

opinionated, and persistent."

"He is a very serious guy," said Joseph Thomas, Sheridan's faculty adviser at Cornell University, where he earned a master's degree in business administration in 1980.

According to Chrysler documents, Sheridan's team highlighted several safety components in Ford Motor Co.'s Windstar van -- anti-lock brakes, brake-shift interlock, a fuel shut-off switch, dual latches on the liftgate.

In Sheridan's view, Chrysler had to match Ford on safety. His convictions were fueled by a number of grisly accidents involving the Chrysler minivan. Lawsuits charged that liftgate latches failed in collisions, ejecting children from the rear of the van.

Chrysler defended the latches, even when the National Highway Traffic Safety Administration (NHTSA) opened a formal investigation in early 1994.

Sheridan pressed for stronger latches on the new minivan, but soon found that he had minimal influence with senior executives. In October 1994, he fired off a testy memo to Theodor Cunningham, general manager of the minivan platform team.

"SLT (safety leadership team) membership is concerned that its approach is not fully endorsed, or a priority of upper management," Sheridan wrote.

Two weeks later, Cunningham disbanded the team. "Your team was not intended to make a final decision on a (safety) feature," he wrote Sheridan.

Fired by Chrysler amidst minivan probe

By then, Sheridan had other plans.

In the fall of 1994, Clarence Ditlow, executive director of the Center for Auto Safety in Washington, D.C., took an anonymous phone call from a Chrysler employee alleging defects in the minivan.

It was Sheridan.

"What he wanted to do was get information to the government about the safety of the minivans," Ditlow said in a 1998 court deposition.

Sheridan began collecting documents to take to NHTSA as federal regulators were turning up the heat on Chrysler. In November 1994, NHTSA officially informed Chrysler executives that "latch failure is a safety defect that involves children."

The minivan was under attack. Some top executives, led by Eaton, vowed to fight any recall on the latches. Others argued that the controversy could ruin the minivan's family-friendly image.

In the midst of the maelstrom, the trade paper Automotive News reported that "crash-test woes" had stalled work on the new van. Chrysler security poured over company phone records to find the leak. They grilled Sheridan on Dec. 16, 1994. Three days later, he was suspended.

Sheridan was fired Dec. 27 for "unauthorized disclosure of confidential" information. Chrysler also won a restraining order in Oakland County Circuit Court prohibiting him from disclosing "trade secrets."

Media exposure gets attorneys' attention

Chrysler's new minivan debuted at the 1995 North American International Auto Show in Detroit. A huge media throng packed the Cobo Center exhibit as Eaton extolled the attributes of the state-of-the-art van.

Meanwhile, in his small, suburban bungalow in Dearborn, Sheridan prepared to do battle.

He denied leaking crash-test documents to the media, but Sheridan was product planner. Fired in 1994 for allegedly leaking confidential safety documents about the Chrysler minivan.

* Sued by Chrysler for $82 million. Sheridan countersues for damages under the Whistleblower Protection Act.

* Key witness in the 1997 wrongful-death case of Sergio Jimenez Jr., a 6-year-old killed when he was ejected from the rear of his family's Chrysler minivan. South Carolina jury awards his parents $262 million in damages. The verdict is overturned on appeal.

* Appears on ABC "Primetime" on May 3, 2001, criticizing Chrysler for failing to install brake-shift interlock devices on its minivans. The same day, Nancy Lou Whitt dies in a brake-shift related accident in Nashville, Tenn.

▶ Comment on this story
▶ Send this story to a friend
▶ Get Home Delivery

in Slovakia

Sections for this dat
Sunday, July 13, 2003
Select index

Copyright © 2003
The Detroit News.
Use of this site indicates y
agreement to the Terms
Service (updated 12/19/20

ready to go public.

He claimed in court that Chrysler hid minivan defects from the government, and sued the company for damages under the state's Whistleblower Protection Act.

After an appearance on the ABC-TV news show "20/20," his phone rang incessantly. Attorneys clamored for his help on minivan cases. Media attention ratcheted up with each new report of a liftgate-related accident.

"One of the biggest mistakes Chrysler ever made was to fire him," Ditlow said. "He's knowledgeable and he's credible and that's a dangerous combination for a company."

In March 1995, Chrysler announced a "service campaign" to put replacement latches on more than 4 million minivans. By then, NHTSA had identified 37 deaths linked to latch failures.

Replacing the latches hardly slowed down Sheridan.

His first deposition came in a Virginia case in which a minivan driver, George Baird, died in a crash after his seat inexplicably collapsed backward. Chrysler settled out of court.

Moreover, attorneys began tapping into Sheridan's memory of internal meetings and memos that laid out a road map for subpoenas of Chrysler officials and documents.

Chrysler fought back. It won a protective order to seal Sheridan's deposition in a latch case in California -- Ornelas vs. Chrysler -- involving four passengers ejected from a minivan in a low-speed crash.

Then the company put a price tag of $82 million on its damages claim against Sheridan. But rather than intimidating Sheridan, the move emboldened him.

"By taking the actions they took, they made the plaintiffs' bar very aware of my credentials," he said. "I mean, why would you sue someone for $82 million if they didn't know anything?"

He was the star witness in a 1997 latch case in which a South Carolina jury awarded the family of a dead 6-year-old $262 million in damages. (The verdict was overturned on appeal and the case settled out of court.)

And a year later, Sheridan was waiting outside a Los Angeles courtroom to testify in the Ornelas case when Chrysler abruptly settled the suit. He's convinced that his presence as a witness prompted the settlement.

"Once Chrysler knew I was in the hallway, they settled," he said.

You can reach Bill Vlasic at (313) 222-2152 or mailto:bvlasic@detnews.com

▸ Previous Story ▸ Next Story

The Detroit News AUTOS insider
detnews.com

Brookline Management Co. Featured in: apartments.com
Find an Apartment!

Latest Autos Insider reports
Previous Story Next Story

SEARCH detnews.com
Go

Home Page
Essentials
CyberSurveys
Forums
Photo Galleries
Weather
Horoscope
Lottery
Giveaways
Crossword
Contact Us
Autos
Autos Insider
Drive
-- Car Reviews
-- Latest Deals
-- Model Reports
Joyrides
Business
Business
Money & Life
Careers
-- Find a Job
Real Estate
-- Find a Home
Metro
Metro/State
Wayne
Oakland
Macomb
Livingston
Commuting
Obituaries
-- Death Notices
Schools
Special Reports
Editorials
Columnists
Detroit History
Nation/World
Nation/World
Politics/Gov
Census
Health
Religion
Technology
Sports
Sports Insider
Lions/NFL
Pistons/NBA
Red Wings/NHL
Tigers/MLB
MSU
U-M
More Colleges
High Schools
Golf
Motor Sports
Outdoors
More Sports
Scoreboards
Entertainment
Entertainment
Events
-- Event Finder
Movies/TV/DVD
-- Movie Finder
-- TV Listings
Eats & Drinks
-- Restaurants

Sunday, July 13, 2003

Robin Buckson / The Detroit News

The Chrysler minivan that crushed Nancy Lou Whitt of Tennessee wasn't equipped with a gear-shift locking device.

Gear-shift safety is next crusade

By Bill Vlasic / The Detroit News

Part 3

Nancy Lou Whitt and her two children returned from services at the United Methodist Church in the early evening of May 2, 2001. She put her 1994-model Plymouth Voyager in "park" in the driveway of her suburban Nashville home and got out to pick up the mail.

According to police reports, her 5-year-old son, Mason, "accidentally pulled on the gear-shift lever" and the van went into reverse toward Whitt.

"The victim tried to stop the vehicle from rolling backwards," the police report said. "She apparently fell and the vehicle rolled on top of her."

Whitt died the next day of "traumatic asphyxia." That night, in a grim coincidence, Sheridan appeared on ABC-TV's "Primetime."

The subject? Chrysler minivans and their lack of

Robin Buckson / The Detroit News

Nancy Lou Whitt, shown with husband James and children Mason and Shelby, was killed after being pinned under her minivan when her son shifted it into reverse.

Marketplace Detroit
- Browse the Classifieds
- New & Used Cars
- Employment
- Homes or Apartments
- Shop Online

Home Delivery Center
- Start home delivery
- Renew subscription
- Customer service

Autos Insider
- Autos Insider index for Sunday, July 13, 2003
- Safety Firebrand Refuses to Relent
- Minivan safety is first big task
- Gear-shift safety is next crusade
- Buy-here, pay-here car dealerships find niche
- Not your father's tank of gasoline
- Delphi plans to increase investments in China
- Renault leads 2.9% gain in June European car sales
- New F-150 price to rise slightly
- Ford names new CFO; two vice presidents
- Federal-Mogul Corp. president named CEO
- Customer satisfaction, quality top Honda agenda
- Delphi to increase investment in China
- Ford insider gets CFO job
- Ford raises top price of F-150 pickup to $35,570
- Federal-Mogul appoints McClure as CEO
- Chrysler sues 3 lawyers, accuses them of filing bogus $2 billion lawsuit
- Firms rated on global warming
- Delphi's Asia-Pacific sales up 30 percent, CEO says
- Honda will boost sales with new models and revamps, new president says
- DaimlerChrysler may end stock options
- DaimlerChrysler puts Georgia plant on hold

– Wine Report
Books
CD Reviews
Escapes
Casino Guide
Michigan's Best
Living
Lifestyle
Homestyle
Fitness
Forums
News Talk
Autos Talk
Wings Talk
Lions Talk
Pistons Talk
Tigers Talk
Big 10 Talk
High Schools
Movie Talk
Tech Talk

brake-shift interlock systems.

On the program, Sheridan claimed that Chrysler executives had rejected brake-shift interlock for minivans in spite of his safety team's recommendations.

"We were right, they were wrong and, unfortunately, tragedy was the result," he said.

The interlock system, standard on most Ford and General Motors Corp. models since the early 1990s, requires someone to step on the brake before the gear-shift can be engaged. Without it, even a small child can put the van in gear.

Company officials contend that the real issue is not brake-shift interlock, but leaving kids alone in a running automobile.

"These accidents are preventable and serve as sober reminders that children should never be left alone in vehicles," said DaimlerChrysler spokeswoman Ann Smith.

Sheridan is a paid consultant on the Whitt case, and a potential witness if it goes to trial. Chrysler attorneys vow to challenge his testimony.

"He does not have an engineering background and he was never involved in the design or testing of a brake-shift interlock system," said Louann Van Der Wiele, a company attorney.

But Sheridan knows enough about brake-shift devices to purchase one at a local car dealership, and install it on a minivan steering column in less than 30 minutes at his basement workbench.

Did he blow whistle, or violate contract?

With his graying brown hair and droopy eyes, short-sleeve shirts and rumpled khakis, Sheridan hardly looks the part of a safety firebrand.

A lifelong bachelor, he drives a rusty 1988 Dodge Daytona, totes binders stuffed with newspaper articles and legal papers and eats lunch in the same Dearborn diner every day he's in town.

He laughs off the notion that he has gotten rich from his consulting fees. In his best year, Sheridan said he earned $50,000, compared with his $68,000 annual salary at Chrysler.

"I think Paul sacrificed everything for the truth," said Mikal Watts, a Texas lawyer who used Sheridan in latch cases. "It could have been easy to draw his salary and pension and keep his mouth shut."

Sheridan's own legal war with Chrysler appeared over when, in 1999, an Oakland County judge dismissed Sheridan's whistleblower suit. A year later, Chrysler withdrew its $82 million lawsuit against him.

Sheridan lost an appeal of his whistleblower case in February, and now is petitioning the Michigan Supreme Court. The case could clarify the level of protection given whistleblowers under state law.

Chrysler argues that Sheridan doesn't deserve to be called a whistleblower. "He disseminated confidential information in violation of his employment contract," Van Der Wiele said. "That's not whistleblowing."

Unlike the defense industry or government workers, federal law does not specifically cover auto employees, according to Steven Kohn, chairman of the National Whistleblowers Council in Washington, D.C.

"There is no federal protection for automotive whistleblowers," Kohn

Robin Buckson / The Detroit News

Sheridan swears he isn't getting wealthy from work as an automotive whistleblower. As proof, he points to the rusty 1988 Dodge Daytona he drives.

▸ Comment on this story
▸ Send this story to a friend
▸ Get Home Delivery

• Ford may cut Europe output
• Hyundai may build pla in Slovakia

Sections for this date
Sunday, July 13, 2003
Select index

Copyright © 2003
The Detroit News.
Use of this site indicates you agreement to the Terms of Service (updated 12/19/2002

said. "It is industry by industry, and that's a major deficiency in the law."

'He's hung in there a long time'

His legal status as a whistleblower doesn't faze Sheridan.

He is on a mission, just as he was when his airline flight was canceled after the Sept. 11, 2001, terrorist attacks, and he drove eight straight hours to Tennessee to give a deposition.

Auto safety specialists marvel at Sheridan's longevity. One compared him to a middle-aged baseball star still firing fast balls late into his career.

"Sheridan is a little like Roger Clemens," Ditlow said. "He's hung in there a long time. Most whistleblowers burn out from the pressure."

If anything, Sheridan seems to thrive on fighting Chrysler. Before testifying in an air-bag death case in February, Sheridan could barely contain his emotions about the victim, an 8-year-old girl.

"I'm so angry about this," he said. "But when I get in the witness box, I'm going to be as cool as a morning pond."

Chrysler won the case. But Sheridan has moved on.

"There are plaintiffs who still need my assistance right now," he said. "And they will get it."

You can reach Bill Vlasic at (313) 222-2152 or mailto:bvlasic@detnews.com

▶ Previous Story ▶ Next Story

ATTACHMENT AM

EXPERT WITNESS REPORT - 2 January 2012 REVISION

Kline v. Loman Auto Group, Victoria Morgan-Alcala, et al.

Page Range 2

Pages 1044 – 1045

U.S. Department
of Transportation
**National Highway
Traffic Safety
Administration**

400 Seventh St., S.W.
Washington, D.C. 20590

JUN 11 1999

CERTIFIED MAIL - RETURN RECEIPT REQUESTED

Michael Kido
Staff Attorney
Center for Auto Safety
2001 S Street, NW, Suite 410
Washington, D.C. 20009-1160

Re: Freedom of Information Act request

Dear Mr. Kido:

This responds to your Freedom of Information Act ("FOIA") request, dated May 13, 1999, for:

> The complete set of documents provided by Paul Sheridan to NHTSA during a meeting between NHTSA representatives and Sheridan on April 11, 1995 concerning the Chrysler Minivan liftgate latch investigation.

Materials responsive to your request can be obtained from the public file for EA94-005 in the agency's Technical Information Services Division (TIS). If you want to obtain copies of these materials you may contact the TIS by visiting, calling or writing NHTSA, Room 5108, 400 Seventh St., SW, Washington, D.C. 20590 (telephone number 202-366-2768) and identifying the reference number. TIS personnel will determine the fees to be charged under 49 C.F.R. Part 7, based upon the volume of material that you may select for duplication. Please note that certain portions of this information have been withheld pursuant to Exemption 6 of the FOIA, 5 U.S.C. §552 (b)(6), because their release would cause an unwarranted invasion of personal privacy. In addition, certain portions of this information have been withheld pursuant to Exemption 4 of the FOIA, 5 U.S.C. §552(b)(4), because their release would cause substantial competitive harm to Chrysler.

I am the person responsible for this decision. If you wish to appeal, you may do so by writing the Associate Administrator for Administration, NHTSA, 400 Seventh Street, N.W., Washington, D.C. 20590. An appeal must be submitted within 30

days after you receive this determination. It should contain any information and argument upon which you rely. The decision of the Associate Administrator will be administratively final.

Sincerely,

Heidi L. Coleman
Assistant Chief Counsel
for General Law

ATTACHMENT AN

EXPERT WITNESS REPORT - 2 January 2012 REVISION

Kline v. Loman Auto Group, Victoria Morgan-Alcala, et al.

Page Range 2

Pages 1047 – 1048

CHRYSLER CORPORATION

An Equal Opportunity Employer

Personal History Record

Not to be used as an Application For Employment:

Personal Information

Last Name	First Name	Middle Initial	Social Security No.	Corp.Svc.Date	Date Prepared	Indicate your current status
						Management—ESA (Exec. Supv. Admin.) ☐ Salaried—CET (Cler. Eng. Tech.) ☐ Hourly ☐

Education and Training

School: (Circle last year of formal education)	Total Credit	School Name	City	State	Dates Attended: From/To Mo/Yr Mo/Yr	Course Major/ Minor	Certificate Diploma Degree	Year Grad.	Grade Average
Grade-High 1. 2. 3. 4. (H.S.)									
College(s) 1. 2. 3. 4.									
Post-Graduate 1. 2. 3. 4.									
Additional Training: Business or Trade School Apprenticeship, other courses and/or classes									

If you have worked or are working in a skilled trades classification, please complete the following:

Present Status: ☐ Journeyman ☐ Apprentice ☐ Permanent Employee ☐ Temporary Employee ☐ Other_____ Trade(s)_____

Type of Training: ☐ Apprenticeship ☐ Upgrader ☐ Other Training Period—From To

Special interests, qualifications

List your career objectives (Other work for which you are qualified and/or interested)

Activities and Accomplishments

List responsible positions held in professional, educational, civic or other pertinent activities which indicate your skills or abilities

Languages other than English with which you are familiar

☐ Speak ☐ Write ☐ Read 1.

☐ Speak ☐ Write ☐ Read 2.

Physical Limitations (Describe briefly)

None

For Personnel department use only:

As Applicable

Typing Speed Shorthand Speed

Date of Test Date of Test

Comments

Personal Information

Last Name | First Name | Middle Initial

Personal History Record

Start with your first significant job and list your work experience to the present time. Include military service. This information is a basic tool in Chrysler's efforts to promote from within. BE BRIEF BUT CLEAR. Give the full title of each position held (Assembly Supervisor instead of just Supervisor). Use department names rather than numbers; indicate what you did or do by describing such things as products, processes, areas of responsibilities, supervisory experience, programs administered, machines operated, etc.

Experience Record

From Mo/Yr	To Mo/Yr	Name of Chrysler Facility or Firm Name and City	Name and Title of Immediate Supervisor	Your Department	Your Job Title	For Personnel Department Use Only

Describe your duties:

Describe your duties:

Describe your duties:

Describe your duties:

Describe your duties:

ATTACHMENT AO

EXPERT WITNESS REPORT - 2 January 2012 REVISION

Kline v. Loman Auto Group, Victoria Morgan-Alcala, et al.

Page Range 15

Pages 1050 – 1064

STATE OF MICHIGAN

IN THE CIRCUIT COURT FOR THE COUNTY OF OAKLAND

CHRYSLER CORPORATION,

Plaintiff,

-vs-

No. 94-489177-CZ
Hon. Edward Sosnick
BOOK I

PAUL SHERIDAN,

Defendant./

The deposition of JOHN M. FONGER, taken pursuant to the Michigan General Court Rules before Rose Ann Zaidan, a Notary Public in and for the County of Oakland, State of Michigan, at 525 Woodward Avenue, Bloomfield Hills, Michigan, on Thursday, April 27, 1995, commencing at or about the hour of 10:10 o'clock A. M.

APPEARANCES:

DICKINSON, WRIGHT, MOON, VAN DUSEN & FREEMAN, BY THOMAS G. KIENBAUM, ESQ., (P15945), and ROBERT B. BROWN, ESQ., (P51378), 500 Woodward Avenue, Ste. 4000, Detroit, MI 48226, 313-223-3500, appearing on behalf of the Plaintiff.

CHAMBERS STEINER, P. C., BY COURTNEY E. MORGAN, ESQ., (P29137), 1490 First National Building, Detroit, MI 48226, 313-961-0130, appearing on behalf of the Defendant.

ALSO PRESENT: MR. PAUL SHERIDAN

- - -

Rose Ann Zaidan, CSR-2217, RPR

the printing looks similar to what was on the other documents.

Q. What was on the other documents, meaning this looks similar to other printing you've seen that you know is Mr. Crossman's?

A. That appears similar to Mr. Crossman's.

Q. Okay. Do you know Seymour Kliger?

A. I have never met Mr. Kliger.

Q. Do you know -- what do you know about him?

A. I know that Mr. Kliger is -- works at Garrity Dodge and works in sales, has a travel agency, was possibly involved working in a company which I believe is E-C-C-O or E-O-O-C -- ECCO, that Mr. Kliger knows many people from Chrysler because he sold them vehicles, and that's about it.

Q. Have you ever spoke with Mr. Kliger?

A. No.

Q. Did you intend as part of this investigation to speak with Mr. Kliger?

A. I am directed by Counsel and I have not spoken to Mr. Kliger.

Q. Okay. I understood that you haven't. You already answered that question. I asked you if you had intended as part of this investigation to speak to Mr.

Kliger. Remember what you said about responding to the questions; they're important if you don't.

MR. KIENBAUM: Come on. Is that a sense of humor I see appearing across this table there? What is th question now?

A. Did I ever intend to talk to Seymour Kliger?

Q. (BY MR. MORGAN) Yes, as part of this investigation.

A. My answer is that somebody from the investigative team would talk with Mr. Kliger, yes.

Q. (BY MR. MORGAN) Okay. Was there someone who you anticipated was going to do that?

A. I presented the facts to Counsel and Counsel made the decision who would talk to Mr. Kliger.

Q. Okay. And was the decision no one?

MR. KIENBAUM: Well, the decision of Counse I don't think -- as communicated to him I don't think you need to get into.

Q. (BY MR. MORGAN) Is it true that your investigative team did not speak to Mr. Kliger upon advice of Counsel?

MR. KIENBAUM: Well, again, that's -- why don't we leave it the fact that they didn't, that he intended to. He spoke with Counsel. I mean why get into

A. That's what the statement he made to us was.

Q. He was apparently successful, then, wasn't he?

MR. KIENBAUM: That is your question?

Q. (BY MR. MORGAN) Mr. Sheridan, neither his report nor his name got into the press with respect to thi Automotive News article, is that correct?

MR. KIENBAUM: What do you mean by his report?

MR. MORGAN: His status report. Do you wan the exhibit number? Is that what you're asking me?

MR. KIENBAUM: Well, no, I just want it identified as we --

MR. MORGAN: Exhibit 22.

A. His name was not mentioned and nor was the status report.

Q. (BY MR. MORGAN) Okay. Keep reading.

A. "His problem was he never told Seymour to keep this info tight. He knew he was in trouble with memo to Ted and this would make it worse."

Q. Have you ever considered whether or not Mr. Kliger (KLI-ger) or Kliger (KLI-jer) would have any motive to want to hurt Chrysler?

A. Not to my knowledge.

Q. He is a man whose income, because he works for

Garrity Dodge, depends upon, does it not, the financial health of the Chrysler Corporation?

A. At least part of his income, yes.

Q. And a significant, as I understand it, a significant part of the Chrysler income is based upon minivan sales, isn't it?

A. You'd have to ask somebody else. I'm not really an expert on our income.

Q. I mean did this thought cross your mind why in the world would Kliger ever give this stuff to Bohn?

A. Yes.

Q. It did?

A. (Nodding).

Q. What was your thought process on it?

A. It was a question that was unanswered.

Q. It seems a little inconsistent, doesn't it?

MR. KIENBAUM: Inconsistent with what?

MR. MORGAN: With what you know about Mr. Kliger.

MR. KIENBAUM: Well, let's get down what he knows about Mr. Kliger so as to be inconsistent. You mean just that he works for a dealership?

A. What I know about Mr. Kliger is very limited, as I told you, and I don't know. He might have a very bic

reason, but I don't know.

Q. (BY MR. MORGAN) Okay. Is that something that you intended to investigate?

A. I intended to find out if Mr. Kliger gave the information to Mr. Bohn.

Q. And in the course of that would you have wanted to investigate or try and determine a motive Mr. Kliger had, one either for or against the proposition that he may have given items to Mr. Bohn?

A. If Mr. Kliger would admit that he gave those items to Mr. Bohn, I would have asked the question why, the same as I asked the question of Mr. Sheridan.

Q. Okay. But you would agree with me as you sit here today that it seems an unusual circumstance for someone who apparently would be -- would want to be loyal and whose financial livelihood is tied to the Chrysler Corporation would do something that would hurt the corporation or could hurt the corporation?

MR. KIENBAUM: Well, let's take that apart. You're asking him whether it would be unusual for somebody to take an action that hurts somebody if all the other things are true, if they're true?

MR. MORGAN: You have my question.

THE WITNESS: Can you read it back?

STATE OF MICHIGAN

IN THE CIRCUIT COURT FOR THE COUNTY OF OAKLAND

CHRYSLER CORPORATION,

Plaintiff,

-vs-

No. 94-489177-CZ
Hon. Edward Sosnick

PAUL SHERIDAN,

Defendant./

The deposition of MICHAEL J. KROTCHE, taken pursuant to the Michigan General Court Rules before Rose Ann Zaidan, a Notary Public in and for the County of Oakland, State of Michigan, at 525 Woodward Avenue, Bloomfield Hills, Michigan, on Wednesday, April 5, 1995, commencing at or about the hour of 9:00 o'clock A. M.

APPEARANCES:

DICKINSON, WRIGHT, MOON, VAN DUSEN & FREEMAN, BY JOHN E. SCOTT, ESQ., (P20164), and ROBERT B. BROWN, ESQ., (P51378), 500 Woodward Avenue, Ste. 4000, Detroit, MI 48226, 313-223-3500, appearing on behalf of the Plaintiff.

CHAMBERS STEINER, P. C., BY COURTNEY E. MORGAN, ESQ., 1490 First National Building, Detroit, MI 48226, 313-961-0130, appearing on behalf of the Defendant.

ALSO PRESENT: MR. PAUL SHERIDAN
GREGORY S. MUZINGO, ESQ.

- - -

Rose Ann Zaidan, CSR-2217, RPR

Q. You indicated that you know Seymour Kliger?

A. Yes, sir.

Q. How do you know him?

A. Seymour has been at Garrity Dodge for a number of years. My brother-in-law has bought vehicles from Seymour, my brother has bought vehicles from Seymour. I've taken vehicles over there for service and talked to Seymour. Basically professionally. You know, I've met him a number of times.

Q. You certainly knew how to find Seymour Kliger any time you wanted to find him, would that be correct?

A. No.

Q. You wouldn't be able to call Garrity Motors and ask for Seymour?

A. I could call Garrity Motors, yes.

Q. Did you at any time talk -- attempt to talk to Seymour Kliger about this investigation?

A. No.

Q. Were you directed not to do so?

A. Counsel advised us not to speak to Mr. Seymour Kliger.

Q. When were you advised not to speak to a witness in this case?

A. I believe on or about January 13th, 1995.

Q. Were you given a reason?

MR. SCOTT: Well, I'll object to that question on the grounds that it would invade the attorney/client privilege and instruct the witness not to answer.

Q. (BY MR. MORGAN) Did you have an intention of your own investigative agenda, if I may use that term, to interview Seymour Kliger?

A. I would assume we would have done it, yes, sir.

Q. In order to do a complete investigation you would agree that a discussion with Seymour Kliger would be appropriate?

A. From an investigatory standpoint, I would think so.

Q. And you -- at no time, however, prior to January 13 did you attempt to interview Mr. Kliger regarding this case?

A. Again, based upon advice from Counsel, we had not met with Mr. Kliger at that point, no.

Q. Well, you told me that you were advised by Counsel on January 13 not to talk to Mr. Kliger.

A. Yes.

Q. And my question was directed to the time period before January 13. So your failure to speak to Mr. Kliger,

if you told me the truth that you were advised on January 13 not to talk to Seymour Kliger, cannot be because you were advised by Counsel.

MR. SCOTT: That's a statement. You don't need to answer.

Q. (BY MR. MORGAN) Isn't that correct, sir?

A. No, sir.

Q. Is it true that you were advised by Counsel on January 13, 1995, not to talk to Seymour Kliger?

A. Yes, sir.

Q. But your intention was prior to that to do so?

A. At a point prior to that, yes.

Q. Did you have some other conversation with Counsel wherein you were advised not to talk to Seymour Kliger?

A. There was a point in time in discussions with our boss that we talked about interviewing Mr. Kliger, but --

Q. (Interposing) That would be Mr. Miller you're talking about?

A. Yes, among others. Plus the three investigators, we discussed it. But there was a point in time that -- and I don't know if it was Mr. Ridella or who it was advised against talking to Mr. Kliger until they had

a time to -- till we had this February -- January 13th meeting.

Q. When were you -- when did you discuss with Mr. Miller your intention to interview Mr. Kliger?

A. Probably -- probably the week after -- the week of the new year -- after we came back from the holiday.

Q. Would it be January 3?

A. I would think so.

Q. That's an assumption on your part?

A. Sometime in that period of time, yes.

Q. Okay. Did the three investigators, did they discuss interviewing Mr. Kliger at any time prior to the first week of January?

A. We had certainly discussed it, yes.

Q. How many times?

A. I have no idea.

Q. Sometime between January -- I'm sorry -- December 13 and December 31 you discussed it several times?

A. I would say between December 19th and probably January 13th we had talked about it, yes.

Q. All right. Well, you didn't discuss it between the 13th and the 19th?

A. If we did, it would probably have been simply as an overview of where we were at at the time. I would

think we may have, but I don't remember or recall specifically saying, well, we got over to go over and talk to Kliger now. I'm sure we all in the back of our minds -- we may have talked about it, but it really wasn't that pointed at that point in time.

Q. Well, did it ever become pointed?

A. Certainly.

Q. When?

A. Following -- following the 19th and then following the point in time that we had Mr. Sheridan's statement we probably -- I'm sure we talked about it.

Q. Okay. Were the phones in Highland Park out of order or something during that time period?

A. Not that I know of.

Q. So, on the 19th, if you had wanted to, you could have picked up the phone, dialed Mr. Kliger's number there at Garrity, and asked to speak to Seymour, couldn't you?

A. Certainly.

Q. You didn't do it?

A. No.

Q. And through the balance of the year the phones weren't out of order; you could have called him at any time, right?

A. Certainly.

Q. Where is Garrity Motors, by the way, in relationship to your office?

A. About a mile.

Q. About a mile. Without telling me what they were, were you given reasons by Counsel why not to talk to Seymour?

MR. SCOTT: Objection, calls for an invasion of the attorney/client privilege. You're instructed not to answer.

MR. MORGAN: I don't think it does. That's why I asked the question the way I asked it.

MR. SCOTT: I disagree with you.

MR. MORGAN: I'm entitled to get some idea of the conversation. It may or may not be privileged, Mr. Scott. You are not in charge of that.

MR. SCOTT: I respectfully disagree with you and instruct the witness not to answer.

MR. MORGAN: You disagree with me that you are in charge of the privilege, not the Court, is that your position?

MR. SCOTT: I have made my objection and my objection is on the record. I do not intend to debate with you.

Q. (BY MR. MORGAN) Did you at any time discuss speaking with Mr. Bohn?

A. No.

Q. You never serious -- you never considered at all contacting Mr. Bohn about his article?

MR. SCOTT: Do you -- I'm sorry. I heard you say -- did you say Bohn?

MR. MORGAN: Mr. Bohn.

MR. SCOTT: All right. I'm sorry. I misheard. I apologize.

A. Are you saying me specifically?

Q. (BY MR. MORGAN) Yes, you.

A. No.

Q. Did anyone that you spoke with ever discuss the possibility that an attempt should be made to interview Mr. Bohn?

A. No.

Q. Okay. So, in all of your investigation in this case the subject matter of talking to Joe Bohn about his article never came up?

MR. SCOTT: Well, I'm going to object. You may answer the question other than as it relates to your conversations with Counsel.

A. No, we discussed it very briefly and

immediately terminated any discussions because we were of the opinion that no way would Joe Bohn discuss his source of information.

Q. (BY MR. MORGAN) Who's "we," now?

A. Brian Bradley, Fonger and myself.

Q. All right. So your testimony earlier that no discussion was had about talking to Joe Bohn, that was an error? You did talk about it, but only briefly, is that your testimony?

A. You asked about me personally. We talked about --

Q. (Interposing) Then I asked you --

MR. SCOTT: (Interposing) Wait. Wait. Let him finish his answer, please.

A. We at some point in time, and I believe it may have been shortly after the interviews with Mr. Sheridan, we said no. "Where do we go from here?" And the interview with Joe Bohn, "Forget it. He's not going to release his source of information." And we just discounted it at that point in time and proceeded no farther.

Q. (BY MR. MORGAN) Well, who did you consider to be the investigator principally in charge of this investigation?

A. John Fonger.

ATTACHMENT AP

EXPERT WITNESS REPORT - 2 January 2012 REVISION

Kline v. Loman Auto Group, Victoria Morgan-Alcala, et al.

Page Range 6

Pages 1066 – 1071

STATE OF MICHIGAN

IN THE CIRCUIT COURT FOR THE COUNTY OF OAKLAND

CHRYSLER CORPORATION,
a Delaware corporation,

Plaintiff,

vs.

PAUL SHERIDAN,

Defendant.
_____/

C.A.#94-46917-CZ
HON. EDWARD SOSNICK

Charles F. Clippert (P11938)
Attorney for Plaintiff
525 North Woodward Avenue
Bloomfield Hills, MI 48303-0509
(810) 646-4300

Joseph C. Marshall, III (P28079)
Robert B. Brown (P51378)
Attorneys for Plaintiff
500 Woodward Ave., Suite 4000
Detroit, MI 48226
(313) 223-3500

Courtney E. Morgan, Jr. (P29137)
Attorney for Plaintiff
1490 First National Building
Detroit, Michigan 48226
(313) 961-0130
_____/

LAW OFFICES • CHAMBERS STEPHENS • A PROFESSIONAL CORPORATION

AFFIDAVIT OF SEYMOUR KLIGER

STATE OF MICHIGAN)
)ss.
COUNTY OF Wayne)

I, SEYMOUR KLIGER, being first duly sworn, depose and say:

1. My name is Seymour Kliger. I am a resident of the State of Michigan. I am over the age of 21.

2. I am the General Manager of Garrity Motor Sales, Inc., located at 11500 Joseph Campau, Hamtramck, MI 48212. I have been associated with the automobile business since 1952 and have been the General Manager of Garrity Motors Sales, Inc. (hereinafter known as "Garrity Motors") since it opened in 1959.

PLAINTIFF'S EXHIBIT 276
DEPOBOOK
Δ π EXHIBIT 37
Deponent Winter
Date 12-21-04 Rptr. Jab
WWW.DEPOBOOK.COM
DEPOSITION EXHIBIT KLIGER

3. Garrity Motors is the closest Dodge Dealership to Chrysler Motor Headquarters located in Highland Park, MI. Additionally, there are many plants of the Chrysler Corporation in the near vicinity to Garrity Motors.

4. Through my employment with Garrity Motors, I have become acquainted with many Chrysler Corporation executive employees and officers of the Corporation.

5. My associations with such persons have been both personal and professional.

6. By way of example, the following is a partial list of present and/or former Chrysler Corporation employees with whom I have communicated either orally or in writing on a wide range of subject matters in the past: Lee A. Iacocca, Gerald Greenwald, Robert Lutz, Hal Sperlich, R. S. Miller, Jack Withrow, John Naughton, Gar Laux, Gino Giccondi, Jerry York, Martin Levine and Richard Dauch.

7. As indicated, I have had discussions with these and other employees regarding a wide range of subject matters related to Chrysler's business, including information of a potentially confidential and/or sensitive nature to the Corporation. I have also exchanged documents with at least some of these persons in connection with said discussions. A partial list of the subject matters over which I have had discussion or exchanged documents includes the following: sales, marketing, product planning, complexity, warranty, product liability, manufacturing, communications, customer relations and personnel.

CHAMBERS STEINHER • A PROFESSIONAL CORPORATION • LAW OFFICES

8. I have done these things with one reward in mind -- that the Chrysler Corporation receive the sales, profit, and market share that is rightfully theirs. This principle has and will guide me in all my endeavors related to Chrysler Corporation.

9. I am acquainted with Paul Sheridan. I first met him through sales contacts at Garrity Motors and have known him for several years. I have sold vehicles to him and many of his acquaintances based upon Mr. Sheridan's recommendations. I have also interacted with Mr. Sheridan regarding certain matters related to Chrysler Corporation's business in much the same manner as I have interacted with other Chrysler employees as set forth in paragraph 6 of this Affidavit.

10. I am also acquainted with Joseph Bohn, a writer for the Automotive News. I have always considered his journalistic integrity towards the Chrysler Corporation to be of the highest order.

11. On February 7, 1995, I was served with a subpoena for my deposition to be taken in the case of Chrysler Corporation v Paul Sheridan. Attached to said subpoena, was a copy of Chrysler's Verified Complaint and certain attachments including Affidavits of Martin Levine, John M. Fonger, Michael J. Krotche, Dennis C. Malecki and Mark W. Crossman.

12. I understand that Chrysler Corporation has identified me as a third party ("John Doe"), to whom Paul Sheridan allegedly gave crash test information referred to in paragraphs 7, 8, 9 and 10 of Chrysler's Verified Complaint. I also understand that Chrysler Corporation alleges that I am the third party referred to in paragraph 10 of its Verified Complaint, who gave crash test documents to Joseph

LAW OFFICES • CHAMBERS STEINER • A PROFESSIONAL CORPORATION

Bohn at the Automotive News.

13. These allegations are untrue. I neither received from Paul Sheridan any crash tests results, nor transmitted or gave to Joseph Bohn any copies of any crash tests results documents.

14. Chrysler's Verified Complaint is dated December 27, 1994. At no time prior to that date was I ever contacted by anyone from Chrysler Corporation, claiming in any way to be investigating this matter or who asked me any questions which would in any way relate to my alleged role in this case. Had I been contacted by any Chrysler investigator, I would have freely shared with them all of the information which is contained in this Affidavit.

15. On February 8, 1995, I had a brief conversation with Joseph C. Marshall, III, attorney for Chrysler Corporation in this matter. Our conversation concerned the rescheduling of my deposition to be taken in this case. During the course of said conversation, which I initiated, I indicated to Mr. Marshall that I did not believe a subpoena was necessary and that I have always been willing to discuss these matters or, indeed, anything related to Chrysler with him or any Chrysler investigator or attorney at any time. Mr. Marshall replied that he had not contacted me because he did not know how to contact me. This statement by Mr. Marshall is untrue. I am personally acquainted with many attorneys employed by Chrysler Corporation including Leroy Ritchie, their Vice-President for Legal Affairs. I am also acquainted with Michael J. Kretche whose Affidavit is attached to Chrysler's Verified Complaint in this case. I am quite certain that if Chrysler's legal staff or investigators wanted to speak with me at

LAW OFFICES • CHAMBERS STEINER • A PROFESSIONAL CORPORATION

any time regarding Paul Sheridan, or any other matter, they knew exactly where to find me, i.e., at Garrity Motors, phone number: 313-893-8300.

16. Mr. Sheridan has confided in me several concerns he has regarding the safety of Chrysler's minivans. Mr. Sheridan has expressed to me frustration over his inability to convince Chrysler management to act upon these concerns. Mr. Sheridan stated words to the effect that he should directly report to governmental agencies vehicle defects or other potential violations of the law. I suggested that he consider direct or indirect approaches to Mr. Robert Eaton, the current Chairman of Chrysler Corporation. At no time, did any option I discussed with Mr. Sheridan include direct or indirect approaches to any member of the press or other media.

FURTHER, DEPONENT SAITH NOT.

SEYMOUR KLIGER

Subscribed and sworn to before me
this 10th day of February
1995.

Diane E. Dinkowski
NOTARY PUBLIC

[illegible]
Notary Public, Lenawee County, MI
My Commission Expires Dec. 20, 1997

LAW OFFICES • CHAMBERS STIEHM • A PROFESSIONAL CORPORATION

Q: In this Complaint, it is alleged that Mr. Sheridan gave a crash test document to a third party?

A: Well, it sure as hell wasn't me. I can tell you that.

MR. MORGAN: Mr. Marshall, I'm going to ask you can you give us a copy of the alleged crash test document that was given so I can show it to the witness and verify that, in fact, he's never seen it, and it was not given to him, and he did not give it to Mr. Bohn?

MR. MARSHALL: No.

MR. MORGAN: You refuse to do that?

MR. MARSHALL: I refuse to do it.

MR. MORGAN: You want to keep that secret, do you? You don't think I'm entitled to the evidence in this case?

MR. MARSHALL: Isn't this your examination of this witness?

MR. MORGAN: I'm asking you.

MR. MARSHALL: I'm not —

MR. MORGAN: I'm giving you an opportunity, because you will be in front of the Court, and you will have to explain your actions in this case. I'm giving you an opportunity —

MR. MARSHALL: I welcome the opportunity to go in front of the Court. I can't wait.

MR. MORGAN: I'll bet.

BY MR. MORGAN:

Q: Mr. Kliger, the allegations in this Complaint which allege that you received a document from Mr. Sheridan, and that Mr. Sheridan — or that you in turn gave the document regarding crash test results to Mr. Bohn, are false allegations, are they not, sir?

A: They are totally untrue.

THE WITNESS: Mr. Marshall, I'll just tell you. Should I die where I'm sitting if I'm lying to you. I never received any crash test documents from Mr. Sheridan, nor did I pass — do you follow me — any crash test documents to Mr. Bohn.

BY MR. MORGAN:

Q: And Mr. Kliger, had anyone from Chrysler bothered to ask you that before December 27, 1994, would you have told them that you are not the source of

A: Absolutely. This is the second time in my life — and I'm going to be forty-three years old next

month — and forty-three years I've been associated with Chrysler — all with Dodge — thirty-six years of — virtually all forty-three with the same company, and thirty-six years at the same location, that this is the second time in my life I've been deposed.

The first time in my life when I was deposed, it happened to involve an employee case, again, which involved Mr. Cunningham. And at that time, I called Mr. Greg Mazingo, and I happened to have files because it was concerning this velocity project, and I'll never forget. I went right into Mr. Mazingo's office and took him three cartons of documents — do you follow me — on this velocity. And I said, "Greg, I want you to know one thing. I'm on the side of what's right. I'm on Chrysler's team. In this particular case, Chrysler has done this wrong. They have spent over — it's actually — I'm going to say many millions because I don't want to be challenged — but it was about forty million dollars they paid to an outside consulting agency at the rate of thirty-five thousand three hundred per month, per consultant. And virtually — like I say, Mr. Cunningham's

actions with this particular employee at that time, if you ever pull the files out — if you call Greg Mazingo, Greg will tell you that I walked in there just like I would have if you would have called me or any investigator — if Mr. Krotche would have called me, I would have been over — do you follow me — immediately, or talked to them — do you follow me — immediately on this.

So I mean, I wasn't hard to find, and I really and truly — I feel almost insulted as to the fact that if somebody from Chrysler wanted to get me, including Mr. Ted Cunningham, they knew where to go.

BY MR. MORGAN:

Q: Well, imagine how Mr. Sheridan feels.

Mr. Kliger, we're going to stop the questioning now because it is five o'clock. I will take this up with you. We will pick another appropriate date that is convenient to everyone's schedule to complete this.

A: Yes.

Q: If you do find that file that you've referred to here earlier today that you've been looking for that contains correspondence from Chrysler which

END OF DOCUMENT

EXPERT WITNESS REPORT - 2 January 2012 REVISION

Kline v. Loman Auto Group, Victoria Morgan-Alcala, et al.